CCD-TRV15/TRV15E/TRV15EP/TRV15PK/TRV25/ TRV25PK/TRV35/TRV35E/TRV65/TRV65PK/ TRV85/TRV93/TRV215/TRV615/TRV815

RMT-708

SERVICE MANUAL

Self Diagnostics Supported model

Photo : CCD-TRV93
: RMT-708

Handycam Vision™

Video 8 XR

video Hi8 XR

B MECHANISM

US Model
CCD-TRV15/TRV25/TRV65/TRV85/TRV93/ TRV215/TRV615/TRV815

Canadian Model
CCD-TRV15/TRV25/TRV65/TRV93/ TRV215/TRV615

E Model
CCD-TRV15/TRV15EP/TRV15PK/TRV25PK/ TRV35/TRV35E/TRV65PK

AEP Model
UK Model
East European Model
North European Model

Russian Model
CCD-TRV15E/TRV35E

Hong Kong Model
CCD-TRV15/TRV35/TRV35E

Tourist Model
CCD-TRV35/TRV35E

Australian Model
Chinese Model
CCD-TRV35E

Brazilian Model
CCD-TRV15/TRV65

For MECHANISM ADJUSTMENTS, refer to the "8mm Video MECHANICAL ADJUSTMENT MANUAL VII**" (9-973-801-11).**

SPECIFICATIONS

Video camera recorder

System

Video recording system
CCD-TRV65/TRV65PK/TRV85/TRV93/ TRV615/TRV815 : 4 rotary heads (SP/ LP independent heads)
CCD-TRV15/TRV15PK/TRV15E/ TRV15EP/TRV25/TRV25PK/TRV35/ TRV35E/TRV215 : 2 Rotary heads
Helical scanning FM system
Audio recording system
Rotary heads, FM system
Video signal
CCD-TRV15/TRV15PK/TRV25/ TRV25PK/TRV35/TRV65/TRV65PK/ TRV85/TRV93/TRV215/TRV615/ TRV815 :
NTSC color, EIA standards
CCD-TRV15E/TRV15EP/TRV35E : PAL color CCIR standards
Usable cassette
8mm video format cassette
CCD-TRV15/TRV15PK/TRV15E/ TRV15EP/TRV25/TRV25PK/TRV35/ TRV35E/TRV215 : standard 8
CCD-TRV65/TRV65PK/TRV85/TRV93/ TRV615/TRV815 : Hi8 or standard 8

Recording / Playback time
CCD-TRV15/TRV15PK/TRV25/ TRV25PK/TRV35/TRV65/TRV65PK/ TRV85/TRV93/TRV215/TRV615/ TRV815 :
(using 120 min. cassette)
SP mode: 2 hours
LP mode: 4 hours
CCD-TRV15E/TRV15EP/TRV35E :
(using 90 min. cassette)
SP mode: 1 hours and 30 minutes
LP mode: 3 hours
Fastforward/rewind time
CCD-TRV15/TRV15PK/TRV25/ TRV25PK/TRV35/TRV65/TRV65PK/ TRV85/TRV93/TRV215/TRV615/ TRV815 :
(using 120 min. cassette) Approx. 5 min.
CCD-TRV15E/TRV15EP/TRV35E :
(using 90 min. cassette) Approx. 5 min.
Image device
CCD (Charge Coupled Device)
Viewfinder
Electronic viewfinder
CCD-TRV15/TRV15PK/TRV15E/ TRV15EP/TRV25/TRV25PK/TRV35/ TRV35E/TRV65/TRV65PK/TRV85/ TRV215/TRV615/TRV815 :
Monochrome
CCD-TRV93 :
Color 113,578 (521 x 218)

Lens
Combined power zoom lens
Filter diameter 17/16 in. (37 mm)
CCD-TRV15 (US,CND)/TRV15E (AEP,UK)/TRV25 (AEP,UK)/TRV215 : 16 x (Optical), 64 x (Digital)
CCD-TRV15 (E,HK,BR)/TRV15PK/ TRV15E (NE,EE,RU)/TRV15EP/ TRV25PK : 16 x (Optical), 200 x (Digital)
TRV35E (AEP,UK)/TRV65/TRV85/ TRV93/TRV615/TRV815 :
18 x (Optical), 72 x (Digital)
CCD-TRV35/TRV35E (EE,NE,RU,E,AUS,HK,CN,JE)/ TRV65PK :
18 x (Optical), 220 x (Digital)

Focal distance
CCD-TRV15/TRV15PK/TRV15E/ TRV15EP/TRV25/TRV25PK/TRV215 : 3/16 - 2 5/8 in. (4.1 - 65.6 mm)
CCD-TRV35/TRV35E/TRV65/ TRV65PK/TRV85/TRV93/TRV615/ TRV815 : 3/16 - 8 in. (4.1 - 73.8 mm)
When converted to a 35 mm still camera
CCD-TRV15/TRV15PK/TRV15E/ TRV15EP :
1 9/16 - 24 7/8 in. (39.4 - 630 mm)
CCD-TRV25/TRV25PK/TRV215 :
1 7/8 - 29 3/4 in. (47.2 - 755 mm)
CCD-TRV35/TRV35E/TRV65/ TRV65PK/TRV85/TRV93/TRV615/ TRV815 :
1 7/8 - 33 1/2 in. (47.2 - 850 mm)

— Continued on next page —

8 VIDEO CAMERA RECORDER
CCD-TRV15/TRV15E/TRV15PK/TRV15EP/TRV25/ TRV25PK/TRV35/TRV35E/TRV215

Hi8 VIDEO CAMERA RECORDER
CCD-TRV65/TRV65PK/TRV85/TRV93/TRV615/TRV815

MICROFILM

SONY®

Color temperature
Auto
Minimum illumination
CCD-TRV15/TRV15PK : 0.4 lux (F 1.4)
CCD-TRV15E/TRV15EP : 0.4 lux (F 1.4)(Visible minimum low light 0.2 lux)
CCD-TRV25/TRV25PK/TRV35/TRV35E/TRV65/TRV65PK/TRV85/TRV93/TRV215/TRV615/TRV815 : 0.7 lux (F 1.4)
CCD-TRV35/TRV35E/TRV65/TRV65PK/TRV85/TRV93/TRV615/TRV815 :
0 lux (in NightShot mode)*
* Object invisible for the dark can be shot with infrared lighting.
Illumination range
CCD-TRV15/TRV15PK/TRV15E/TRV15EP : 0.4 lux to 100,000 lux
CCD-TRV25/TRV25PK/TRV35/TRV35E/TRV65/TRV65PK/TRV85/TRV93/TRV215/TRV615/TRV815 : 0.7 lux to 100,000 lux
Recommended illumination
More than 100 lux

LCD screen
Picture
CCD-TRV15/TRV15PK/TRV15E/TRV15EP/TRV25/TRV25PK/TRV35/TRV35E/TRV65/TRV65PK/TRV215/TRV615 :
2.5 inches measured diagonally
2 x 1 1/2 in.(50.3 x 37.4 mm)
CCD-TRV85/TRV815 :
3.5 inches measured diagonally
2 7/8 x 2 in.(72.4 x 50.4 mm)
CCD-TRV93 :
3 inches measured diagonally
2 3/8 x 1 3/4 in.(59.5 x 43.2 mm)
On-screen display
TN LCD/TFT active matrix method
Total dot number
CCD-TRV15/TRV15PK/TRV15E/TRV15EP/TRV25/TRV25PK/TRV35/TRV35E/TRV65/TRV65PK/TRV215/TRV615 : 61,380 (279 x 220)
CCD-TRV85/TRV815 :
105,380 (479 x 220)
CCD-TRV93 : 89,622 (383 x 234)

Input and output connectors
S video input/output(CCD-TRV65/TRV65PK/TRV85/TRV93/TRV615/TRV815 only)
4-pin mini DIN
Luminance signal : 1 Vp-p, 75 ohms, unbalanced
Chrominance signal : 0.286 Vp-p, 75 ohms, unbalanced
Video input(CCD-TRV65/TRV65PK/TRV85/TRV93/TRV615/TRV815 only)/output
Phono jack, 1 Vp-p, 75 ohms, unbalanced
Audio input (CCD-TRV65/TRV65PK/TRV85/TRV93/TRV615/TRV815 only)/output
CCD-TRV15/TRV15PK/TRV15E/TRV15EP/TRV25/TRV25PK/TRV35/TRV35E/TRV215 :
Monaural, Phone jack, 327 mV
CCD-TRV65/TRV65PK/TRV85/TRV93/TRV615/TRV815 : Phono jacks (2: stereo L and R) 327 mV, (at output impedance 47 kilohms) impedance less than 2.2 kilohms
RFU DC OUT
Special minijack, DC 5V
Headphone jack(CCD-TRV65/TRV65PK/TRV85/TRV93/TRV615/TRV815 only)
Stereo minijack (ø 3.5 mm)
Earphone jack(CCD-TRV15/TRV15PK/TRV15E/TRV15EP/TRV25/TRV25PK/TRV35/TRV35E/TRV215 only)
Monaural minijack (ø 3.5 mm)
LANC control jack
Stereo minijack (ø 2.5 mm)
MIC jack
Mini jack, 0.388mV low impedance with 2.5 to 3.0 V DC, output impedance 6.8 kilohms (ø 3.5 mm)
CCD-TRV15/TRV15PK/TRV15E/TRV15EP/TRV25/TRV25PK/TRV35/TRV35E/TRV215 : Monaural type
CCD-TRV65/TRV65PK/TRV85/TRV93/TRV615/TRV815 : Stereo type
Speaker
Dynamic speaker

Intelligent accessory shoe(CCD-TRV65/TRV65PK/TRV85/TRV93/TRV615/TRV815 only)
8-pin connector

General
Power requirements
7.2 V (battery pack)
8.4 V (AC power adaptor)

Averege power consumption(when using the battery pack)
During camera recording using LCD
CCD-TRV15/TRV15PK/TRV15E/TRV15EP : 3.1 W
CCD-TRV25/TRV25PK/TRV35/TRV35E/TRV215 : 3.2 W
CCD-TRV65/TRV65PK/TRV615 : 3.3 W
CCD-TRV85/RV815 : 3.6 W
CCD-TRV93 : 3.4 W
Viewfinder
CCD-TRV15/TRV15PK/TRV15E/TRV15EP : 2.5 W
CCD-TRV25/TRV25PK/TRV35/TRV35E/TRV215 : 2.6 W
CCD-TRV65/TRV65PK/TRV85/TRV615/TRV815 : 2.7 W
CCD-TRV93 : 2.6 W
Operating temperature
32°F to 104°F(0°C to 40°C)
Storage temperature
-4°F to +140°F(-20°C to +60°C)
Dimentions (Approx.)
CCD-TRV15/TRV15PK/TRV15E/TRV15EP/TRV25/TRV25PK/TRV35/TRV35E/TRV65/TRV65PK/TRV215/TRV615 :
4 1/4 x 4 1/4 x 8 1/4 in.
(107 x 107 x 209 mm)(w/h/d)
CCD-TRV85/TRV815 :
4 1/2 x 4 3/8 x 8 1/2 in.
(114 x 111 x 214 mm)(w/h/d)
CCD-TRV93 :
4 1/2 x 4 3/8 x 8 1/2 in.
(114 x 109 x 214 mm)(w/h/d)
Mass (Approx.)
CCD-TRV15/TRV15PK/TRV15E/TRV15EP/TRV25/TRV25PK/TRV215 : 1 lb 15 oz (890 g)
CCD-TRV35/TRV35E/TRV65/TRV65PK/TRV615 : 1 lb 15 oz (900 g)
CCD-TRV85/TRV815 : 2 lb 1 oz (950 g)
CCD-TRV93 : 2 lb (930 g)
excluding the battery pack, lithium battery, cassette and shoulder strap
2 lb 3 oz (1 kg)
including the battery pack NP-F330, lithium battery CR2025, cassette and shoulder strap
Microphone
CCD-TRV15/TRV15PK/TRV15E/TRV15EP/TRV25/TRV25PK/TRV35/TRV35E/TRV215 : Monaural type
CCD-TRV65/TRV65PK/TRV85/TRV93/TRV615/TRV815 : Stereo type
Supplied accessories
See page 4.

AC power adaptor
Power requirements
100 -240 V AC, 50/60 Hz
Power consumption
23 W
Output voltage
DC OUT: 8.4 V, 1.5 A in operating mode
Operating temperature
32°F to 104°F(0°C to 40°C)
Storage temperature
-4°F to +140°F(-20°C to +60°C)
Dimentions (Approx.)
5 x 1 9/16 x 2 1/2 in. (125 x 39 x 62 mm)(w/h/d) excluding projecting parts
Mass (Approx.)
9.8 oz (280 g) excluding power cord (Main lead)

Design and specifications are subject to change without notice.

- Abbreviation
  CND : Canadian Model
  EE : East European Model
  NE : North European Model
  RU : Russian Model
  HK : Hong Kong Model
  AUS : Australian Model
  JE : Tourist Model
  CN : Chinese Model
  BR : Brazilian Model

SAFETY CHECK-OUT

After correcting the original service problem, perform the following safety checks before releasing the set to the customer:

1. Check the area of your repair for unsoldered or poorly-soldered connections. Check the entire board surface for solder splashes and bridges.

2. Check the interboard wiring to ensure that no wires are “pinched” or contact high-wattage resistors.

3. Look for unauthorized replacement parts, particularly transistors, that were installed during a previous repair. Point them out to the customer and recommend their replacement.
4. Look for parts which, though functioning, show obvious signs of deterioration. Point them out to the customer and recommend their replacement.
5. Check the B+ voltage to see it is at the values specified.

6. Flexible Circuit board Repairing
   - Keep the temperature of the soldering iron around 270°C during repairing.
   - Do not touch the soldering iron on the same conductor of the circuit board (within 3 times).
   - Be careful not to apply force on the conductor when soldering or unsoldering.

SAFETY-RELATED COMPONENT WARNING !!

COMPONENTS IDENTIFIED BY MARK ⚠ OR DOTTED LINE WITH MARK ⚠ ON THE SCHEMATIC DIAGRAMS AND IN THE PARTS LIST ARE CRITICAL TO SAFE OPERATION. REPLACE THESE COMPONENTS WITH SONY PARTS WHOSE PART NUMBERS APPEAR AS SHOWN IN THIS MANUAL OR IN SUPPLEMENTS PUBLISHED BY SONY.

ATTENTION AU COMPOSANT AYANT RAPPORT À LA SÉCURITÉ!!

LES COMPOSANTS IDENTIFIÉS PAR UNE MARQUE ⚠ SUR LES DIAGRAMMES SCHÉMATIQUES ET LA LISTE DES PIÈCES SONT CRITIQUES POUR LA SÉCURITÉ DE FONCTIONNEMENT. NE REMPLACER CES COMPOSANTS QUE PAR DES PIÈCES SONY DONT LES NUMÉROS SONT DONNÉS DANS CE MANUEL OU DANS LES SUPPLÉMENTS PUBLIÉS PAR SONY.

Table for difference of function

Model		CCD-TRV15	CCD-TRV15/ TRV15PK	CCD-TRV15E	CCD-TRV15EP	CCD-TRV25	CCD-TRV25PK	CCD-TRV215	CCD-TRV35	CCD-TRV35E		Remark
Destination		US,CND	E,HK,BR	AEP,UK,EE, NE,RU	E	US,CND	E	US,CND	E,HK,JE	AEP,UK,EE, NE,RU	E,HK,AUS, CN,JE	
Classification		TYPE A		TYPE G		TYPE C			TYPE D	TYPE F		
Color System		NTSC	NTSC	PAL	PAL	NTSC	NTSC	NTSC	NTSC	PAL	PAL	
Hi8		×	×	×	×	×	×	×	×	×	×	
Standard 8		O	O	O	O	O	O	O	O	O	O	
Lens	Optical	16X	16X	16X	16X	16X	16X	16X	18X	18X	18X	16X : LSV601A, 18X : LSV600A
	Digital	64X	200X	64X(Note 1)	200X	64X	200X	64X	220X	72X(Note 2)	220X	
CCD		510H	510H	510H	510H	760H	760H	760H	760H	760H	760H	
Night shot		×	×	×	×	×	×	×	O	O	O	O : LSV600A
Steady shot		×	×	×	×	O	O	O	O	O	O	O : with SE-66/67 board SE451,452,IC451
5heads/3heads		3heads	3heads	3heads	3heads	3heads	3heads	3heads	3heads	3heads	3heads	
Audio System		Mono	Mono	Mono	Mono	Mono	Mono	Mono	Mono	Mono	Mono	
TBC&DNR		×	×	×	×	×	×	×	×	×	×	
VTR REC		×	×	×	×	×	×	×	×	×	×	
Laser Link		×	×	×	×	×	×	×	O	×	×	
Color EVF		×	×	×	×	×	×	×	×	×	×	
B/W EVF		O	O	O	O	O	O	O	O	O	O	O : with VF-99 board
LCD		2.5 inch	2.5 inch	2.5 inch	2.5 inch	2.5 inch	2.5 inch	2.5 inch	2.5 inch	2.5 inch	2.5 inch	2.5 inch : PD-92 board, 3/3.5 inch : PD-93 board
Monitor IN		×	×	×	×	×	×	×	×	×	×	
Intelligent Accessory Shoe		×	×	×	×	×	×	×	×	×	×	
Normal Accessory Shoe		×	×	×	×	×	×	×	O	O	O	
Video light		×	×	×	×	×	×	×	×	×	×	
Display window indicator backlight		×	×	×	×	×	×	×	×	×	×	
Manual Focus		×	×	×	×	×	×	×	O	O	O	

Model		CCD-TRV65	CCD-TRV65/ TRV65PK	CCD-TRV615	CCD-TRV85	CCD-TRV815	CCD-TRV93	Remark
Destination		US,CND	BR/E	US,CND	US	US	US,CND	
Classification		TYPE B					TYPE E	
Color System		NTSC	NTSC	NTSC	NTSC	NTSC	NTSC	
Hi8		O	O	O	O	O	O	With S VIDEO terminal
Standard 8		×	×	×	×	×	×	
Lens	Optical	18X	18X	18X	18X	18X	18X	16X : LSV601A, 18X : LSV600A
	Digital	72X	220X	72X	72X	72X	72X	
CCD		760H	760H	760H	760H	760H	760H	
Night shot		O	O	O	O	O	O	O : LSV600A
Steady shot		O	O	O	O	O	O	O : with SE-66/67 board SE451,452,IC451
5heads/3heads		5heads	5heads	5heads	5heads	5heads	5heads	
Audio System		Stereo	Stereo	Stereo	Stereo	Stereo	Stereo	
TBC&DNR		O	O	O	O	O	O	O : with VC-195 board IC204
VTR REC		O	O	O	O	O	O	O : with FK-8500 block S005,007
Laser Link		O	O	O	O	O	O	O : with VC-195 board IC751
Color EVF		×	×	×	×	×	O	O : with VF-119,120 board, LB-54 board
B/W EVF		O	O	O	O	O	×	O : with VF-99 board
LCD		2.5 inch	2.5 inch	2.5 inch	3.5 inch	3.5 inch	3 inch	2.5 inch : PD-92 board, 3/3.5 inch : PD-93 board
Monitor IN		O	O	O	O	O	O	O : with VC-195 board X151
Intelligent Accessory Shoe		O	O	O	O	O	×	O : with VC-195 board CN909
Normal Accessory Shoe		×	×	×	×	×	×	
Video light		×	×	×	×	×	O	O : with VL-19 board
Display window indicator backlight		O	O	O	O	O	O	O : with CF-50/51 board Q003,005
Manual Focus		O	O	O	O	O	O	O : with MF-8500/MR-8500

Note1 : EE,NE,RU model is 200X
Note2 : EE,NE,RU model is 220X

- Abbreviation
  CND : Canadian Model
  EE : East European Model
  NE : North European Model
  RU : Russian Model
  HK : Hong Kong Model
  AUS : Australian Model
  JE : Tourist Model
  CN : Chinese Model
  BR : Brazilian Models

Supplied accessories

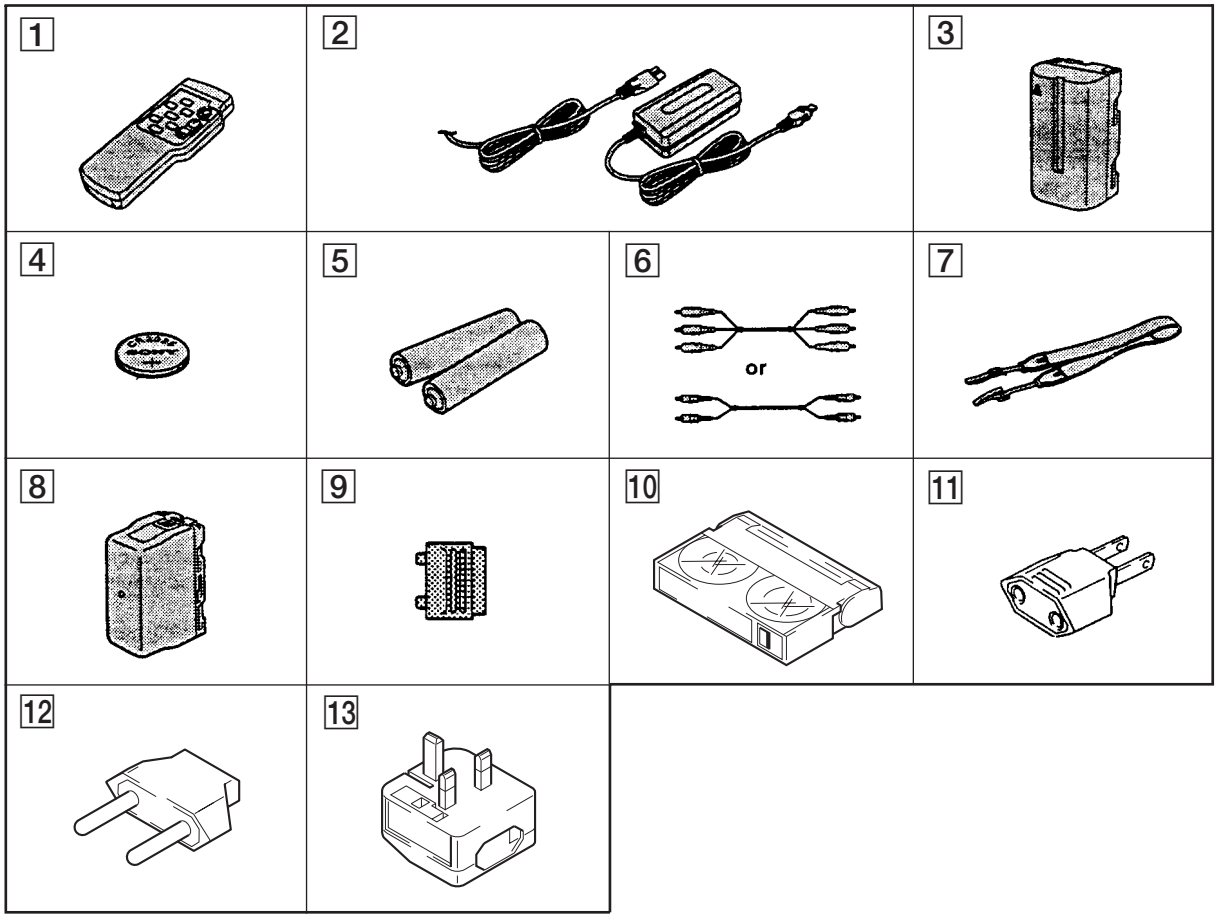

1 **Wireless Remote Commander (1)**

2 **AC-L10A/L10B/L10C AC power adaptor**

3 **NP-F330 Battery pack (1)**

4 **CR2025 Lithium Battery (1)**
The lithium battery is already installed in your camcorder.

5 **Size AA (R6) battery for Remote Commander (2)**

6 **A / V connecting cable (1)**
Stereo : CCD-TRV65/TRV65PK/TRV615/TRV85/TRV815/TRV93
Monaural : Except CCD-TRV65/TRV65PK/TRV615/TRV85/TRV815/TRV93

7 **Shoulder strap (1)**

8 **Battery case (1)**
CCD-TRV15 (US, CND)/TRV25/TRV65/TRV85/TRV93

9 **21 pin adaptor (1) MVC-89**
CCD-TRV15E/35E : AEP, EE, NE, RU, UK

10 **8mm tape**
CCD-TRV15E only

11 **2 pin conversion adaptor (1)**
CCD-TRV15 : E, HK/TRV15PK/TRV25PK/TRV35 : E, HK/TRV35E : E, HK

12 **2 pin conversion adaptor (1)**
CCD-TRV35 : JE/TRV35E : JE

13 **3 pin conversion adaptor (1)**
CCD-TRV15 : HK/TRV35 : HK

- Abbreviation
  CND : Canadian Model
  EE : East European Model
  NE : North European Model
  RU : Russian Model
  HK : Hong Kong Model
  AUS : Australian Model
  JE : Tourist Model
  CN : Chinese Model
  BR : Brazilian Models

SERVICE NOTE

1. POWER SUPPLY DURING REPAIRS

In this unit, about 10 seconds after power is supplied (8.4V) to the battery terminal using the service power cord (J-6082-223-A), the power is shut off so that the unit cannot operate.
This following two methods are available to prevent this. Take note of which to use during repairs.

Method 1.
Connect the servicing remote commander RM-95 (J-6082-053-B) to the LANC jack, and set the remote commander switch to the "ADJ" side.

Method 2.
Use the DC IN terminal. (Use the AC power adaptor.)

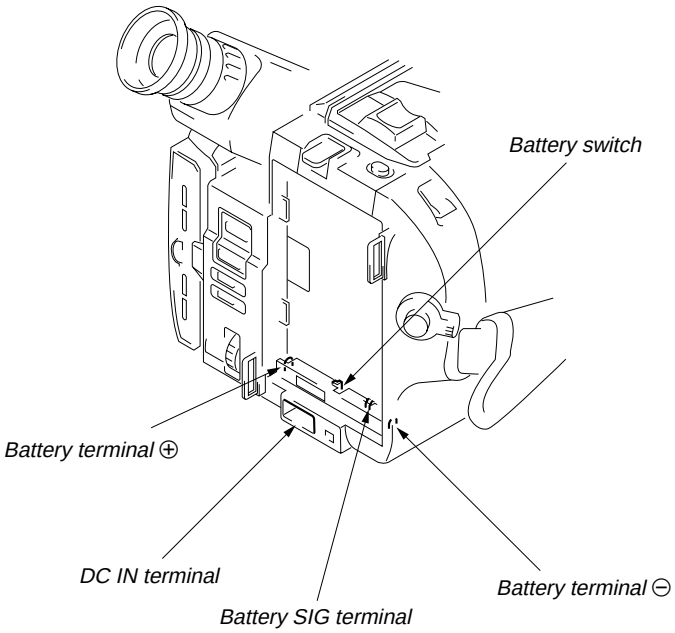

2. TO TAKE OUT A CASSETTE WHEN NOT EJECT (FORCE EJECT)

① Refer to 2-1-1. to remove the front panel assembly.
② Refer to 2-1-2. to remove the cabinet (R) assembly.
③ Refer to 2-1-11. to remove the battery panel assembly.
④ Refer to 2-1-13. to remove the cabinet (L) assembly.
⑤ Add +5V from the DC POWER SUPPLY and unload with a pressing the cassette lid.

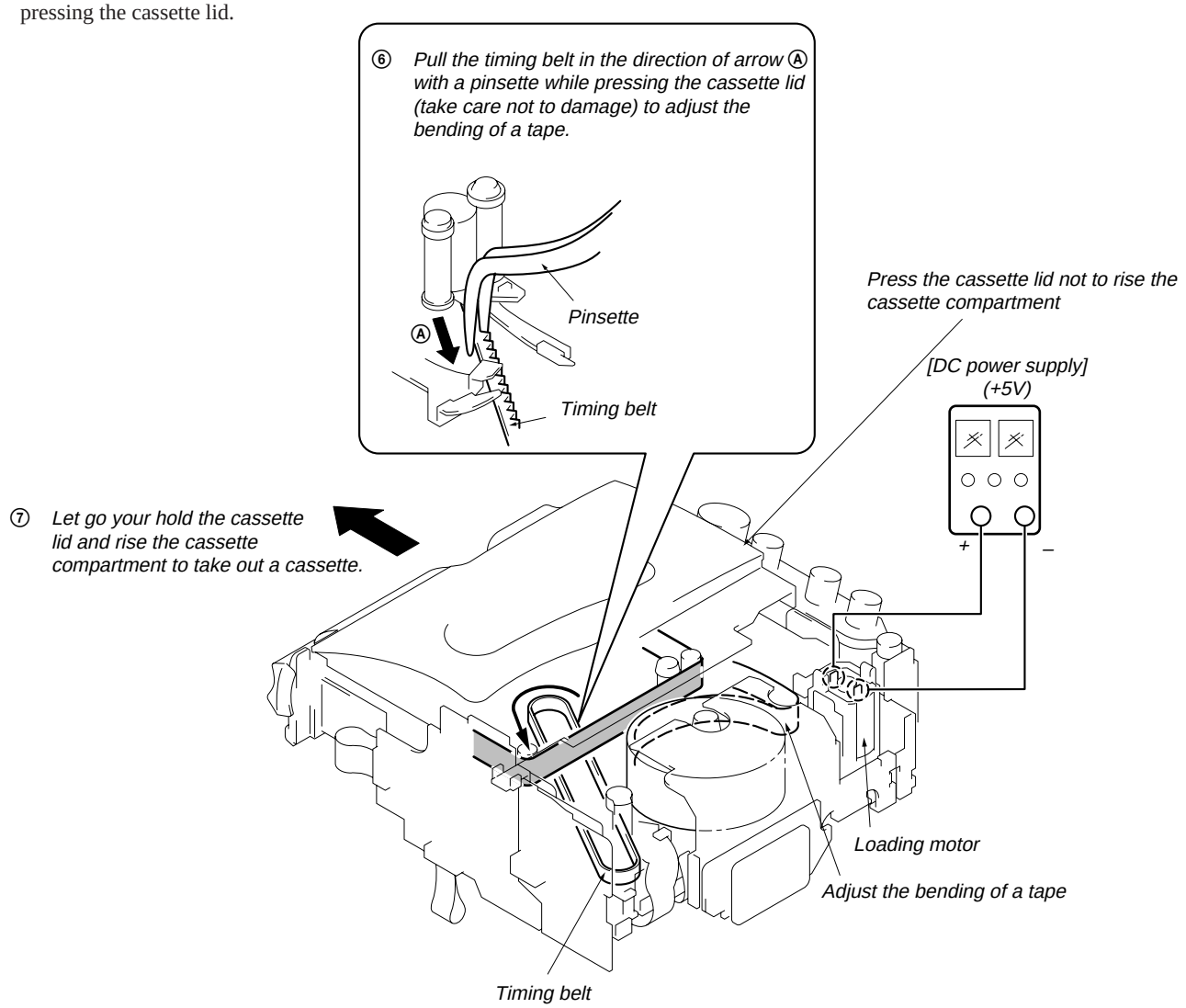
⑥ Pull the timing belt in the direction of arrow Ⓐ with a pinsette while pressing the cassette lid (take care not to damage) to adjust the bending of a tape.
Ⓐ
Pinsette
Timing belt
Press the cassette lid not to rise the cassette compartment
[DC power supply]
(+5V)
+
–
⑦ Let go your hold the cassette lid and rise the cassette compartment to take out a cassette.
Loading motor
Adjust the bending of a tape
Timing belt

SELF-DIAGNOSIS FUNCTION

1. Self-diagnosis Function

When problems occur while the unit is operating, the self-diagnosis function starts working, and displays on the viewfinder or Display window what to do. This function consists of two display; self-diagnosis display and service mode display.
Details of the self-diagnosis functions are provided in the Instruction manual.

2. Self-diagnosis display

When problems occur while the unit is operating, the counter of the viewfinder or Display window shows a 4-digit display consisting of an alphabet and numbers, which blinks at 3.2 Hz. This 5-character display indicates the "repaired by:", "block" in which the problem occurred, and "detailed code" of the problem.

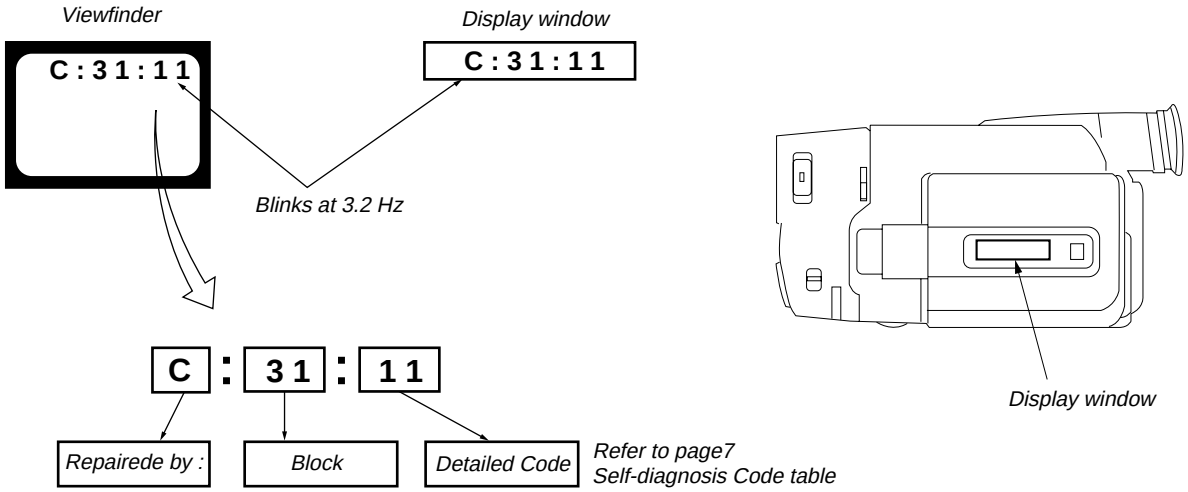

C : Corrected by customer
H : Corrected by dealer
E : Corrected by service engineer

Indicates the appropriate step to be taken
E. g.
31 ... Reload the tape.
32 ... Turn on power again.

3. Service Mode Display

The service mode display shows up to six self-diagnosis codes shown in the past.

3-1. Display Method

While pressing the "STOP" key, set the switch from OFF to "VTR or PLAYER", and continue pressing the "STOP" key for 5 seconds continuously. The service mode will be displayed, and the counter will show the backup No. and the 5-character self-diagnosis codes.

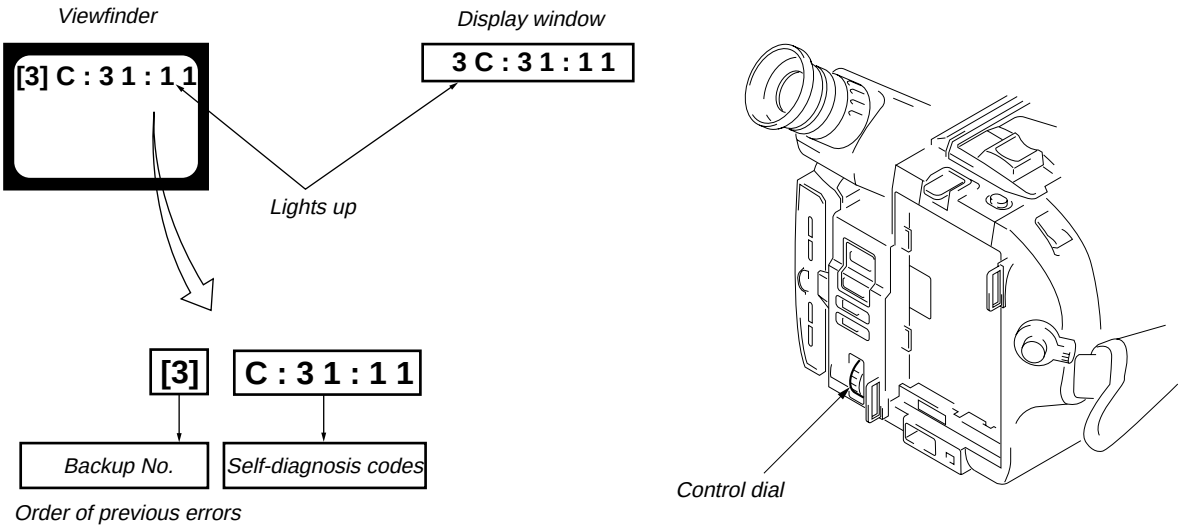

3-2. Switching of Backup No.

By rotating the control dial, past self-diagnosis codes will be shown in order. The backup No. in the [] indicates the order in which the problem occurred. (If the number of problems which occurred is less than 6, only the number of problems which occurred will be shown.)

[1] : Occurred first time
[2] : Occurred second time
[3] : Occurred third time
[4] : Occurred fourth time
[5] : Occurred fifth time
[6] : Occurred the last time

3-3. End of Display

Turning OFF the power supply will end the service mode display.

Note: The self-diagnosis display data will be backed up by the coin-type lithium battery. When this coin-type lithium battery is disconnected, the self-diagnosis data will be lost by initialization.

4. Self-diagnosis Code Table

Self-diagnosis Code					Symptom/State	Correction
Repaired by:	Block Function		Detailed Code			
C	2	1	0	0	Condensation.	Remove the cassette, and insert it again after one hour.
C	2	2	0	0	Video head is dirty.	Clean with the optional cleaning cassette.
C	2	3	0	0	Non-standard battery is used.	Use the InfoLITHIUM battery.
C	3	1	1	0	LOAD direction. Loading does not complete within specified time	Load the tape again, and perform operations from the beginning.
C	3	1	1	1	UNLOAD direction. Loading does not complete within specified time	Load the tape again, and perform operations from the beginning.
C	3	1	2	0	T reel side tape slacking when unloading.	Load the tape again, and perform operations from the beginning.
C	3	1	2	1	S reel side tape slacking when unloading.	Load the tape again, and perform operations from the beginning.
C	3	1	2	2	T reel fault	Load the tape again, and perform operations from the beginning.
C	3	1	2	3	S reel fault	Load the tape again, and perform operations from the beginning.
C	3	1	3	0	FG fault when starting capstan	Load the tape again, and perform operations from the beginning.
C	3	1	3	1	FG fault during normal capstan operations	Load the tape again, and perform operations from the beginning.
C	3	1	4	0	FG fault when starting drum	Load the tape again, and perform operations from the beginning.
C	3	1	4	1	PG fault when starting drum	Load the tape again, and perform operations from the beginning.
C	3	1	4	2	FG fault during normal drum operations	Load the tape again, and perform operations from the beginning.
C	3	1	4	3	PG fault during normal drum operations	Load the tape again, and perform operations from the beginning.
C	3	1	4	4	Phase fault during normal drum operations	Load the tape again, and perform operations from the beginning.
C	3	2	1	0	LOAD direction loading motor time-out	Remove the battery or power cable, connect, and perform operations from the beginning.
C	3	2	1	1	UNLOAD direction loading motor time-out	Remove the battery or power cable, connect, and perform operations from the beginning.
C	3	2	2	0	T reel side tape slacking when unloading.	Remove the battery or power cable, connect, and perform operations from the beginning.
C	3	2	2	1	S reel side tape slacking when unloading.	Remove the battery or power cable, connect, and perform operations from the beginning.
C	3	2	2	2	T reel fault	Remove the battery or power cable, connect, and perform operations from the beginning.
C	3	2	2	3	S reel fault	Remove the battery or power cable, connect, and perform operations from the beginning.
C	3	2	3	0	FG fault when starting capstan	Remove the battery or power cable, connect, and perform operations from the beginning.
C	3	2	3	1	FG fault during normal capstan operations	Remove the battery or power cable, connect, and perform operations from the beginning.
C	3	2	4	0	FG fault when starting drum	Remove the battery or power cable, connect, and perform operations from the beginning.
C	3	2	4	1	PG fault when starting drum	Remove the battery or power cable, connect, and perform operations from the beginning.
C	3	2	4	2	FG fault during normal drum operations	Remove the battery or power cable, connect, and perform operations from the beginning.
C	3	2	4	3	PG fault during normal drum operations	Remove the battery or power cable, connect, and perform operations from the beginning.
C	3	2	4	4	Phase fault during normal drum operations	Remove the battery or power cable, connect, and perform operations from the beginning.
E	6	1	0	0	Difficult to adjust focus (Cannot initialize focus.)	Inspect the lens block focus reset sensor (Pin ⑲ of CN551 of VC-195 board) when focusing is performed when the focus dial is rotated in the focus manual mode and the focus motor drive circuit (IC552 of VC-195 board) when the focusing is not performed. Note : Use the remote commander RM-95 only for the model without the focus dial.
E	6	1	1	0	Zoom operations fault (Cannot initialize zoom lens.)	Inspect the lens block zoom reset sensor (Pin ㉑ of CN551 of VC-195 board) when zooming is performed when the zoom lens is operated and the zoom motor drive circuit (IC552 of VC195 board) when zooming is not performed.
E	6	2	0	0	Handshake correction function does not work well.(With pitch angular velocity sensor output stopped)	Inspect pitch angular velocity sensor (SE451 of SE-66/67 board) peripheral circuits.
E	6	2	0	1	Handshake correction function does not work well.(With yaw angular velocity sensor output stopped)	Inspect yaw angular velocity sensor (SE452 of SE-66/67 board) peripheral circuits.

TABLE OF CONTENTS

SERVICE NOTE

1. Power Supply During Repairs 5
2. To Take out a Cassette when not Eject (Force Eject) 5

Self-Diagnosis Function

1. Self-diagnosis function 6
2. Self-diagnosis Display 6
3. Service Mode Display 6
   3-1. Display Method 6
   3-2. Switching of Backup No. 6
   3-3. End of Display 6
4. Self-diagnosis Code Table 7

1. GENERAL

Using this manual 1-1
Checking supplied accessories 1-1
Installing and Charging the battery pack 1-1
Inserting a cassette 1-3
Camera recording 1-3
Hints for better Shooting 1-4
Checking the recorded picture 1-5
Playing back a tape 1-5
Searching for the end of the picture 1-6
Using alternative power sources 1-6
Changing the mode settings 1-7
Shooting with backlighting 1-8
Using the FADER function 1-8
Shooting in the dark (NightShot) 1-9
Using the wide mode function 1-9
Using the PROGRAM AE function 1-10
Focusing manually 1-10
Enjoying picture effect 1-11
Adjusting the exposure 1-11
Superimposing a title 1-12
Making your own titles 1-12
Recording with the date/time 1-12
Optimizing the recording condition 1-13
Releasing the STEADY SHOT function 1-13
Watching on a TV screen 1-13
Editing onto another tape 1-14
Recording from a VCR or TV 1-14
Charging the lithium battery in the camcoder 1-14
Resetting the date and time 1-15
Simple setting of clock by time difference 1-15
Usable cassettes and playback modes 1-15
Tips for using the battery pack 1-16
Maintenance information and precautions 1-16
Using your camcorder abroad 1-18
Self-diagnosis display 1-18
Identifying the parts 1-18
Warning Indicators 1-20

2. DISASSEMBLY

2-1. Removal of Front Panel Block and Video Light Block 2-1
2-2. Removal of Cabinet (R) Block 2-2
2-3. Removal of EVF Block 2-2
2-4. Removal of LCD Block (3/3.5 inch) 2-2
2-5. Removal of LCD Block (2.5 inch) 2-2
2-6. Removal of CF-51 Board and Control Switch Block (MR-8500) (Color) 2-3
2-7. Removal of CF-50 Board and Control Switch Block (MF-8500) (B/W) 2-3
2-8. Removal of EVF Block-2 (Color) 2-3
2-9. Removal of EVF Block-2 (B/W) 2-4
2-10. Removal of Cabinet (L) Block and Battery Panel Block 2-4
2-11. Removal of Cassette Lid Assembly 2-5
2-12. Removal of Control Switch Block (FK-8500) 2-5
2-13. Removal of Zoom Lens Block and VL-19 Board 2-5
2-14. Removal of DD-105 Board and PJ-84 (PJ-83) Board 2-5
2-15. Removal of VC-195 and SE-67 (SE-66) Board 2-6
2-16. Service Position 2-6
2-17. Circuit Board Location 2-7

3. BLOCK DIAGRAMS

3-1. Overall Block Diagram 3-1
3-2. Camera/Video 1 Block Diagram 3-5
3-3. VTR/Camera Control Block Diagram 3-9
3-4. Servo Block Diagram 3-12
3-5. Mode Control Block Diagram 3-15
3-6. Audio Block Diagram 3-19
3-7. LCD (S Type) Block Diagram 3-23
3-8. LCD (C Type) Block Diagram 3-26
3-9. Color EVF Block Diagram 3-29
3-10. B/W EVF Block Diagram 3-32
3-11. Power Block Diagram 3-35

4. PRINTED WIRING BOARDS AND SCHEMATIC DIAGRAMS

4-1. Frame Schematic Diagram (1) 4-1
• Frame Schematic Diagram (2) 4-4
4-2. Printed Wiring Boards and Schematic Diagrams 4-7
• CD-197/198 (CCD Imager) (2.5 Inch LCD, 3 Inch/3.5 Inch LCD Model) Board 4-8
• VC-195 (Camera, Y/C Processor, IN/OUT, REC/PB Head Amp, Servo/System Control, Servo, Audio, IR Transmiter, Mode Control) Board 4-10
• VC-195 (Camera 1) Board 4-16
• VC-195 (Camera 2) Board 4-19
• VC-195 (Y/C Process) Board 4-23
• VC-195 (IN/OUT) Board 4-27
• VC-195 (REC/PB Head Amp) Board 4-31
• VC-195 (Servo/System Control) Board 4-35
• VC-195 (Servo) Board 4-38
• VC-195 (Audio) Board 4-41
• VC-195 (IR Transmiter) Board 4-46
• VC-195 (Mode Control) Board 4-49
• SE-67/66 (Steady Shot) (2.5 Inch, 3 Inch/3.5 Inch LCD Model) Board 4-52
• PJ-83/84 (AV IN/OUT) (2.5 Inch, 3 Inch/3.5 Inch LCD Model) Board 4-55
• MA-311/331 (Stereo Mic, Laser Link) (2.5 Inch LCD Model) Board 4-58
• MA-312 (Stereo Mic, Laser Link) (3 Inch/3.5 Inch LCD Model) Board 4-59
• VL-19 (Video Light) Board 4-63
• CF-50 (Control (2.5 Inch LCD Model)) Board 4-64
• CF-51 (Control (3 Inch/3.5 Inch LCD Model)) Board 4-73
• Control Switch Block (FK-8500/SS-8500) 4-77
• PD-92 (RGB Decorder, LCD Drive, Back Light LCD (2.5 Inch LCD Model)) Board 4-78
• PD-92 (RGB Decorder) Board 4-81
• PD-92 (LCD Drive) Board 4-84
• PD-92 (Back Light) Board 4-87
• PD-92 (LCD) Board 4-88
• PD-93 (RGB Decorder, LCD Drive, Back Light LCD (3 Inch/3.5 Inch LCD Model)) Board 4-90
• PD-93 (RGB Decorder) Board 4-93
• PD-93 (LCD Drive) Board 4-96
• PD-93 (Back Light) Board 4-99
• PD-93 (LCD) Board 4-100
• VF-120 (Color EVF (Color EVF Model)) Board 4-107
• LB-54 (Back Light) Board 4-107
• VF-99 (B/W EVF (B/W EVF Model)) Board 4-115
• DD-105 (Power) Board 4-118

5. ADJUSTMENTS

5-1. CAMERA SECTION ADJUSTMENTS 5-1
1-1. Preparations before Adjustment (Camera Section) 5-1
1-1-1. List of Service Tools 5-1
1-1-2. Preparations 5-2
1-1-3. Precautions 5-5
1. Setting the Switch 5-5
2. Adjusting Procedure 5-5
3. Subject 5-5
1-1-4. Adjusting Remote Commander 5-6
1. Using the adjusting remote commander 5-6
2. Precautions upon using the adjusting remote commander 5-6
1-1-5. Data Processing 5-7
1-2. Initialization of D, E, F Page Data 5-8
1. Initialization of D, E, F Page Data 5-8
2. Modification of D, E, F Page Data 5-8
3. D Page Table 5-9
4. F Page Table 5-10
5. E Page Table 5-12
1-3. Camera System Adjustments 5-14
1. G-CAM flip Adjustment 5-14
2. Hall Adjustment 5-15
3. Flange Back Adjustment 5-16
3-1. Flange Back Adjustment (1) 5-16
3-2. Flange Back Adjustment (2) 5-16
4. Flange Back Check 5-17
5. Picture Frame Setting 5-17
6. Color Reproduction Adjustment 5-18
7. IRIS IN/OUT Adjustment 5-19
8. MAX GAIN Adjustment 5-19
9. Auto White Balance Standard Data Input 5-20
10. White Balance Adjustment 5-20
11. White Balance Check 5-21
12. Angular Velocity Sensor Sensitivity Adjustment 5-22
1-4. Color Electronic Viewfinder System Adjustments (CCD-TRV93) 5-23
1. EVF Initial Data Input 5-23
2. VCO Adjustment (VF-119 board) 5-24
3. Bright Adjustment (VF-119 board) 5-24
4. Contrast Adjustment (VF-119 board) 5-25
5. Backlight Comsumption Current Adjustment (VF-120 board) 5-25
6. White Balance Adjustment (VF-119 board) 5-25
1-5. Monochrome Electronic Viewfinder System Adjustments (CCD-TRV15/TRV15E/TRV15EP/TRV15PK/ TRV25/TRV25PK/TRV35/TRV35E/TRV65/ TRV65PK/TRV85/TRV215/TRV615/TRV815) 5-26
1-5-1. Horizontal Slant Check 5-26
1-5-2. Centering Adjustment 5-26
1-5-3. Focus Adjustment 5-26
1-5-4. Aberration Adjustment 5-27
1-5-5. Horizontal Amplitude Adjustment (VF-99 board) 5-27
1-5-6. Vertical Amplitude Adjustment (VF-99 board) 5-28
1-5-7. Brightness Adjustments (VF-99 board) 5-28
1-5-8. Horizontal Amplitude, Vertical Amplitude, Focus Check 5-28
1-6. LCD System Adjustment 5-29
1. LCD initial data input 5-29
2. VCO adjustment (PD-92/93 board) 5-30
3. D range adjustment (PD-92/93 board) 5-30
4. Bright adjustment (PD-92/93 board) 5-31
5. Contrast adjustment (PD-92/93 board) 5-31
6. V-COM level adjustment (PD-92/93 board) 5-32
7. Color adjustment (PD-92/93 board) 5-32
8. V-COM adjustment (PD-92/93 board) 5-33
9. White balance adjustment (PD-92/93 board) 5-33

5-2. MECHANICAL SECTION ADJUSTMENT 5-34
2-1. Operating without a Cassette 5-34
2-2. Tape path Adjustment 5-34
1. Preparations for adjustments 5-34

5-3. VIDEO SECTION ADJUSTMENTS 5-35
3-1. Preparations before Adjustment 5-35
3-1-1. Equipments to be Used 5-35
3-1-2. Precautions on Adjusting 5-36
3-1-3. Adjusting Connectors 5-36
3-1-4. Connecting the Equipments 5-37
3-1-5. Alignment Tape 5-37
3-1-6. Input/Output Level and Impedance 5-39
3-1-7. Recording Mode (Standard 8/Hi8) switching (Hi8 model) 5-39
3-1-8. Service Mode 5-39
1. Test mode setting 5-39
2. Emergency memory address 5-40
2-1. EMG CODE (Emergency Code) 5-40
2-2. MSW Codes 5-41
3. Bit value discrimination 5-42
4. Switch check (1) 5-42
5. Switch check (2) 5-43
6. Headphone jack check 5-43
7. Input/output selection check 5-43
8. LED, LCD (display window) check 5-44
9. Record of use check 5-44
3-2. System Control System Adjustment 5-45
1. Initialization of D, E, F Page Data 5-45
2. Battery End Adjustment (VC-195 board) 5-45
3-3. Servo System Adjustments 5-46
1. CAP FG Offset Adjustment (VC-195 board) 5-46
2. Switching Position Adjustment (VC-195 board) 5-46
3. NTSC LP Mode Switching Position Adjustment (VC-195 board) (CCD-TRV65/TRV65PK/TRV85/TRV93/TRV615/TRV815) 5-47
3-4. Video System Adjustments 5-47
1. 28 MHz Origin Oscillation Adjustment (VC-195 board) 5-47
2. AFC f0 Adjustment (VC-195 board) 5-48
3. Filter f0 Adjustment (VC-195 board) 5-48
4. Y OUT Level Adjustment (VC-195 board) 5-49
5. C OUT Level Adjustment (VC-195 board) 5-49
6. RP Filter f0 Adjustment (VC-195 board) 5-50
7. Hi8 REC Y Current Adjustment (VC-195 board) (CCD-TRV85/TRV93/TRV615/TRV815) 5-50
8. Standerd8 REC Y Current Adjustment (VC-195 board) (CCD-TRV15/TRV15E/TRV15EP/TRV15PK/TRV25/TRV25PK/TRV35/TRV35E/TRV215) 5-51
9. Hi8 REC L Level Adjustment (VC-195 board) (CCD-TRV65/TRV65PK/TRV85/TRV93/TRV615/TRV815) 5-52
10. Standerd8 REC L Level Adjustment (VC-195 board) (CCD-TRV15/TRV15E/TRV15EP/TRV15PK/TRV25/TRV25PK/TRV35/TRV35E/TRV215) 5-53
11. REC C Current Adjustment (VC-195 board) 5-54
3-5. IR Transmitter Adjustments (CCD-TRV35/TRV65/TRV65PK/TRV85/TRV93/TRV615/TRV815) 5-55
1. IR Video Carrier Frequency Adjustment (VC-195 board) 5-55
2. IR Video Deviation Adjustment (VC-195 board) 5-55
3. IR Audio Deviation Adjustment (VC-195 board) 5-56
3-6. Stereo Audio System Adjustment (CCD-TRV65/TRV65PK/TRV85/TRV93/TRV615/TRV815) 5-57
1. 1.5 MHz Deviation Adjustment (VC-195 board) 5-58
2. 1.7 MHz Deviation Adjustment (VC-195 board) 5-58
3. BPF f0 Adjustment (VC-195 board) 5-59
3-7. Monaural Audio System Adjustment (CCD-TRV15/TRV15E/TRV15EP/TRV15PK/TRV25/TRV25PK/TRV35/TRV35E/TRV215) 5-59
1. 1.5 MHz Deviation Adjustment (VC-195 board) 5-60
2. BPF Adjustment (VC-195 board) 5-60
3-8. Arrangement Diagram for Adjustment Parts 5-62

6. REPAIR PARTS LIST

6-1. Exploded Views 6-1
6-1-1. Cabinet (L) Block Assembly 6-1
6-1-2. Front Panel Block Assembly (TRV93) 6-2
6-1-3. Front Panel Block Assembly (Except TRV93) 6-3
6-1-4. Cabinet (R) Block Assembly (TRV85/TRV815/TRV93) 6-4
6-1-5. Cabinet (R) Block Assembly (Except TRV85/TRV815/TRV93) 6-5
6-1-6. LCD Block Assembly (3/3.5 Inch) (TRV85/TRV815/TRV93) 6-6
6-1-7. LCD Block Assembly (2.5 Inch) (Except TRV85/TRV815/TRV93) 6-7
6-1-8. EVF Block Assembly (Color EVF) (TRV93) 6-8
6-1-9. EVF Block Assembly (B/W EVF) (Except TRV93) 6-9
6-1-10. Main Boards Assembly 6-10
6-1-11. Battery Panel and CCD Block Assembly 6-11
6-1-12. Device Lens (LSV-600A/LSV-601A) 6-12
6-1-13. Cassette Compartment Assembly 6-13
6-1-14. LS Chassis Assembly 6-14
6-1-15. Mechanism Chassis Assembly 6-15
6-2. Electrical Parts List 6-16

CCD-TRV15/TRV15E/TRV15EP/TRV15PK/TRV25/TRV25PK/TRV35/TRV35E/ TRV65/TRV65PK/TRV85/TRV93/TRV215/TRV615/TRV815

SECTION 1 GENERAL

This section is extracted from instruction manual of CCD-TRV15/25/35/65/615.

Before you begin

Using this manual

The instructions in this manual are for the seven models listed below. Before you start reading this manual and operating the unit, check your model number by looking at the bottom of your camcorder. The CCD-TRV65 is the model used for illustration purposes. Otherwise, the model name is indicated in the illustrations. Any differences in operation are clearly indicated in the text, for example, "CCD-TRV65 only."
As you read through this manual, buttons and settings on the camcorder are shown in capital letters.
e.g. Set the POWER switch to CAMERA.
You can hear the beep sound to confirm your operation.

Types of differences

CCD-	TRV15	TRV25/TRV215	TRV35	TRV65/TRV615
System	[redacted]	[redacted]	[redacted]	[redacted]
VIDEO/AUDIO IN*	—	—	—	●
S VIDEO	—	—	—	●
Optical zoom	16x	16x	18x	18x
Digital zoom	64x	64x	72x	72x
NightShot	—	—	●	●
Steady Shot	—	●	●	●
LASER LINK	—	—	●	●
Fader function	—	—	●	●
Stripe	—	—	—	●
Manual focus	—	—	●	●
Exposure	—	—	●	●
Audio	monaural	monaural	monaural	stereo

* The models without VIDEO/AUDIO IN have CAMERA, OFF and PLAYER mode on the POWER switch.

TV color systems differ from country to country. To view your recordings on a TV, you need an NTSC system-based TV.

Television programs, films, video tapes, and other materials may be copyrighted. Unauthorized recording of such materials may be contrary to the provision of the copyright laws.

- **The LCD screen and/or the color viewfinder are manufactured using high-precision technology. However, there may be some tiny black points and/or bright points (red, blue or green in color) that constantly appear on the LCD screen and/or in the viewfinder. These points are normal in the manufacturing process and do not affect the recorded picture in any way. Over 99.99% are operational for effective use.**
- Do not let the camcorder get wet. Keep the camcorder away from rain and sea water. Letting the camcorder get wet may cause the unit to malfunction, and sometimes this malfunction cannot be repaired **[a]**.
- Never leave the camcorder exposed to temperatures above 140°F (60°C), such as in a car parked in the sun or under direct sunlight **[b]**.

[a]

[b]

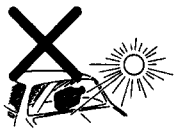

Checking supplied accessories

Check that the following accessories are supplied with your camcorder.

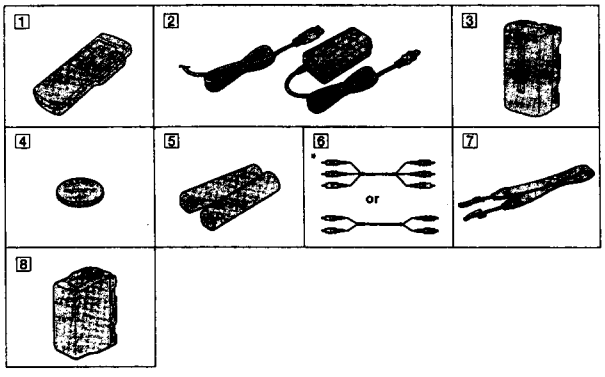

1 **Wireless Remote Commander** (1) (p. 84)
2 **AC-L10A/L10B/L10C AC power adaptor** (1), **Power cord** (1) (p. 8, 26)
3 **NP-F330 Battery pack** (1) (p. 7, 26)
4 **CR2025 Lithium Battery** (1) (p. 59)
The lithium battery is already installed in your camcorder.
5 **Size AA (R6) battery for Remote Commander** (2) (p. 85)
6 **A/V connecting cable** (1) (p. 54)
*for stereo model
7 **Shoulder strap** (1) (p. 85)
8 **Battery case** (1) (p. 27)
CCD-TRV15/TRV25/TRV35/TRV65 only

Contents of the recording cannot be compensated if recording or playback is not made due to a malfunction of the camcorder, video tape, etc.

Getting started

Installing and charging the battery pack

Before using your camcorder, you first need to install and charge the battery pack.

(1) While pressing BATT RELEASE, slide the battery terminal cover in the direction of the arrow.
(2) Install the battery pack in the direction of the ▼ mark on the battery pack. Slide the battery pack down until it catches on the battery release lever and clicks. Attach the battery pack to the camcorder securely.

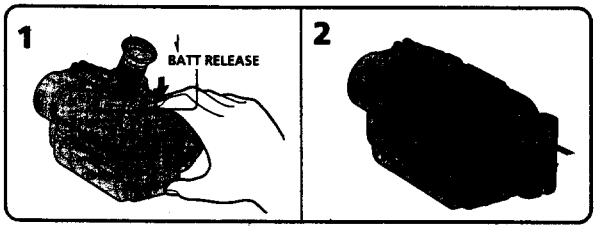

Note on the battery pack
Do not carry the camcorder by grasping the battery pack.

Installing and charging the battery pack

Charge the battery pack on a flat surface without vibration. The battery pack is charged a little in the factory.

(1) Open the DC IN jack cover and connect the supplied AC power adaptor to the DC IN jack with the plug's ▲ mark up.
(2) Connect the power cord to the AC power adaptor.
(3) Connect the power cord to a wall outlet.
(4) Slide the POWER switch to OFF. Remaining battery time is indicated by the minutes on the display window. Charging begins.

When the remaining battery indicator becomes ■■, **normal charge** is completed. For **full charge**, which allows you to use the battery longer than usual, leave the battery pack attached for about 1 hour after normal charge is completed until FULL appears in the display window.

Before using the camcorder with the battery pack, unplug the AC power adaptor from the DC IN jack of the camcorder. You can also use the battery pack before it is completely charged.

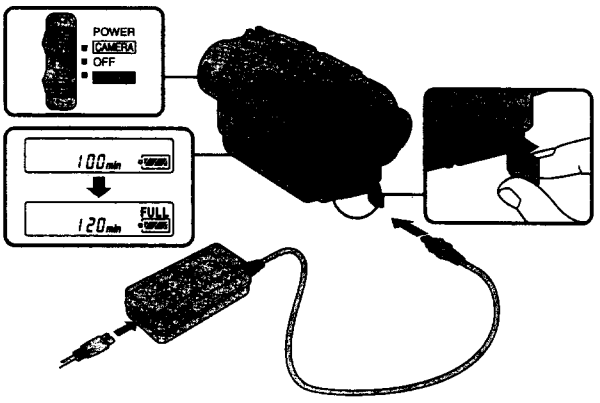

Notes

- "– – – min" appears in the display window until the camcorder calculates remaining battery time.
- Remaining battery time indication in the display window roughly indicates the recording time with the viewfinder. Use it as a guide. It may differ from the actual recording time.

Installing and charging the battery pack

Charging time

Battery pack	NP-F330 (supplied)	NP-F530/F550	NP-F730/F730H/F750	NP-F930/F950
Charging time* (min.)	150 (90)	210 (150)	300 (240)	390 (330)

The time required for a normal charge is indicated in parentheses.

* Approximate minutes to charge an empty battery pack using the supplied AC power adaptor. (Lower temperatures require a longer charging time.)

Battery life

Upper numbers are the time when recording with the viewfinder. Lower numbers are the time when recording with the LCD screen. Using both will further reduce recording time.

CCD-TRV15

Battery pack	NP-F330 (supplied)	NP-F530	NP-F550	NP-F730	NP-F730H/F750	NP-F930	NP-F950
Continuous recording time*	130 (115) 100 (90)	225 (200) 170 (155)	260 (230) 205 (185)	450 (405) 350 (310)	530 (480) 425 (380)	710 (640) 555 (500)	815 (730) 650 (590)
Typical recording time**	65 (60) 55 (45)	115 (105) 90 (85)	135 (120) 110 (100)	235 (210) 190 (170)	280 (250) 230 (205)	375 (335) 305 (275)	430 (385) 355 (320)
Playing time on LCD	100 (90)	165 (150)	200 (180)	335 (300)	410 (365)	535 (480)	630 (570)

CCD-TRV25/TRV35/TRV215

Battery pack	NP-F330 (supplied)	NP-F530	NP-F550	NP-F730	NP-F730H/F750	NP-F930	NP-F950
Continuous recording time*	125 (110) 100 (90)	215 (190) 165 (150)	250 (220) 200 (180)	430 (385) 335 (300)	510 (460) 410 (365)	680 (610) 535 (480)	780 (700) 630 (570)
Typical recording time**	65 (55) 55 (45)	110 (100) 90 (80)	130 (115) 110 (95)	225 (200) 180 (165)	270 (240) 225 (200)	360 (320) 290 (260)	410 (370) 345 (310)
Playing time on LCD	100 (90)	165 (150)	200 (180)	335 (300)	410 (365)	535 (480)	630 (570)

Installing and charging the battery pack

CCD-TRV65/TRV615

Battery pack	NP-F330 (supplied)	NP-F530	NP-F550	NP-F730	NP-F730H/F750	NP-F930	NP-F950
Continuous recording time*	120 (105) 95 (85)	205 (180) 160 (145)	240 (210) 195 (175)	410 (370) 325 (290)	490 (440) 395 (355)	650 (585) 515 (465)	750 (675) 610 (550)
Typical recording time**	60 (55) 50 (45)	105 (95) 85 (75)	125 (110) 105 (95)	215 (195) 175 (155)	255 (230) 215 (195)	340 (310) 280 (255)	395 (355) 335 (300)
Playing time on LCD	95 (85)	160 (145)	195 (175)	325 (290)	395 (355)	515 (465)	610(550)

Numbers in parentheses indicate the time when you use a normally charged battery. Battery life will be shorter if you use the camcorder in a cold environment.

* Approximate continuous recording time at 77°F (25°C).
** Approximate minutes when recording while you repeat recording start/stop, zooming and turning the power on/off. The actual battery life may be shorter.

Notes on remaining battery time indication during recording

- Remaining battery time is displayed in the viewfinder or on the LCD screen. However, the indication may not be displayed properly, depending on using conditions and circumstances.
- When you close the LCD panel and open it again, it takes about 1 minute for the correct remaining time to be displayed.

Installing and charging the battery pack

To remove the battery pack

While pressing BATT RELEASE, slide the battery pack in the direction of the arrow.

You can look at the demonstration of the functions available with this camcorder (p. 32).

Inserting a cassette

Make sure that the power source is installed. When you want to record in the Hi8 system, use Hi8 video cassette Hi8.(CCD-TRV65/TRV615 only)

(1) While pressing the small blue button on the EJECT switch, slide it in the direction of the arrow. The cassette compartment automatically lifts up and opens.
(2) Insert a cassette with the window facing out.
(3) Close the cassette compartment by pressing the "PUSH" mark on the cassette compartment. The cassette compartment automatically goes down.

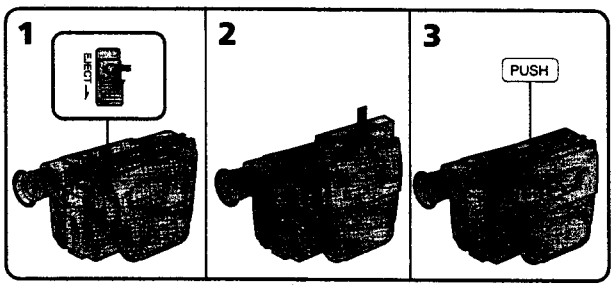

To eject the cassette

While pressing the small blue button on the EJECT switch, slide it in the direction of the arrow.

To prevent accidental erasure

Slide the tab on the cassette to expose the red mark. If you insert the cassette with the red mark exposed and close the cassette compartment, the beeps sound for a while. If you try to record with the red mark exposed, the and ⏏ indicators flash, and you cannot record.
To re-record on this tape, slide the tab back out covering the red mark.

Camera recording

Make sure that the power source is installed and a cassette is inserted and that the START/STOP MODE switch inside the LCD panel is set to . Before you record one-time events, you may want to make a trial recording to make sure that the camcorder is working correctly.
When you use the camcorder for the first time, power on it and reset the date and time to your time before you start recording (p. 61). The date is automatically recorded for 10 seconds after you start recording **(AUTO DATE feature)**. This feature works only once a day.

(1) While pressing the small green button on the POWER switch, set it to CAMERA.
(2) Turn STANDBY up to STANDBY.
(3) Press START/STOP. The camcorder starts recording. The "REC" indicator appears. The red lamp lights up in the viewfinder. The camera recording/battery lamp located on the front of the camcorder also lights up.

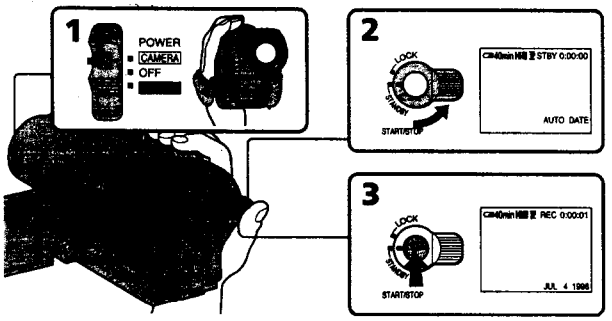

To stop recording momentarily [a]

Press START/STOP again. The "STBY" indicator appears in the viewfinder **(Standby mode)**.

To finish recording [b]

Press START/STOP again. Turn STANDBY down to LOCK and set the POWER switch to OFF. Then, eject the cassette.

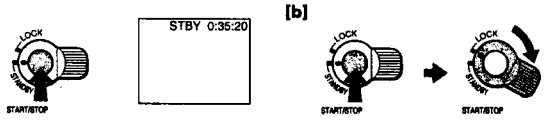

Note
There is a little wear on the battery pack which is installed with the camcorder. However, for getting remaining battery time indicated correctly, leave the battery pack installed after use.

To focus the viewfinder lens

If you cannot see the indicators in the viewfinder clearly, or after someone else has used the camcorder, focus the viewfinder lens. Turn the viewfinder lens adjustment ring so that the indicators in the viewfinder come into sharp focus.

Note on Standby mode
If you leave the camcorder in Standby mode for 5 minutes while the cassette is inserted, the camcorder turns off automatically for saving battery power as well as for preventing the battery and tape from wearing down. To resume Standby mode, turn STANDBY down and up again. To start recording, press START/STOP.

Note on recording
When you record from the beginning of a tape, run the tape for about 15 seconds before starting the actual recording. This will ensure that you won't miss any start-up scenes when you play back the tape.

Notes on the tape counter
- The tape counter indicates the recording or playback time. Use it as a guide. There will be a time lag of several seconds from the actual time. To set the counter to zero, press COUNTER RESET.
- If the tape is recorded in SP and LP modes mixed, the tape counter shows incorrect recording time. When you intend to edit the tape using the tape counter as a guide, record in same (SP or LP) mode.

Note on the beep sound
The beep sounds when you operate the camcorder. Several beeps also sound as a warning of any unusual condition of the camcorder.
Note that the beep sound is not recorded on the tape. If you do not want to hear the beep sound, select "OFF" in the menu system.

Note on the AUTO DATE feature
The clock is set to East Coast Standard Time at the factory. You can reset the clock in the menu system. You can change the AUTO DATE settings by selecting ON or OFF in the menu system. The AUTO DATE feature shows the date automatically once a day. However, the date may automatically appear more than once a day when:
- you reset the date and time.
- you eject and insert the tape again.
- you stop recording within 10 seconds.
- you set AUTO DATE to OFF once and set it to ON again in the menu system.

Zooming is a recording technique that lets you change the size of the subject in the scene.
For more professional-looking recordings, use the zoom function sparingly.
"T" side: for telephoto (subject appears closer)
"W" side: for wide-angle (subject appears farther away)

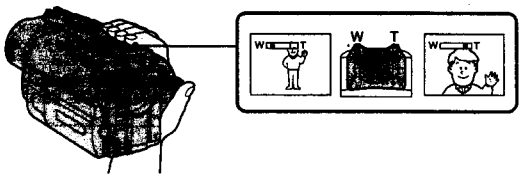

Zooming speed (Variable speed zooming)

Move the power zoom lever a little for a slower zoom, move it further for a faster zoom.

When you shoot a subject using a telephoto zoom
If you cannot get a sharp focus while in extreme telephoto zoom, move the power zoom lever to the "W" side until the focus is sharp. You can shoot a subject that is at least about 2 5/8 feet (about 80 cm) away from the lens surface in the telephoto position, or about 1/2 inch (about 1 cm) away in the wide-angle position.

Notes on digital zoom
- More than 16x (CCD-TRV15/TRV25/TRV215) or 18x (CCD-TRV35/TRV65/TRV615) zoom is performed digitally, and the picture quality deteriorates as you go toward the "T" side. If you do not want to use the digital zoom, set the D ZOOM function to OFF in the menu system.
- The right side **[a]** of the power zoom indicator shows the digital zooming zone, and the left side **[b]** shows the optical zooming zone. If you set the D ZOOM function to OFF, the **[a]** zone disappears.

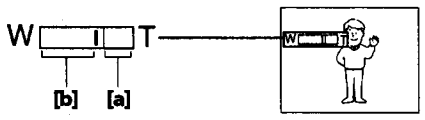

Your camcorder has three modes. These modes enable you to take a series of quick shots resulting in a lively video.

(1) While pressing OPEN, open the LCD panel.

(2) Set START/STOP MODE to the desired mode.

: Recording starts when you press START/STOP, and stops when you press it again (normal mode).

ANTI GROUND SHOOTING : The camcorder records only while you press down START/STOP so that you can avoid recording unnecessary scenes.

5SEC: When you press START/STOP, the camcorder records for 5 seconds and then stops automatically.

(3) Turn STANDBY up to STANDBY and press START/STOP. Recording starts.

If you selected 5SEC, the tape counter disappears and five dots appear. The dots disappear at a rate of one per second as illustrated below.

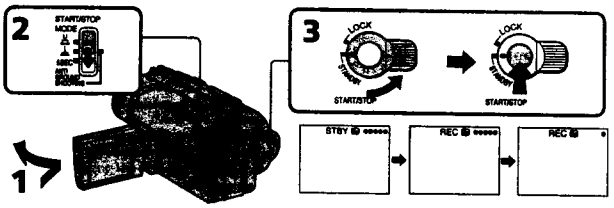

To extend the recording time in 5SEC mode

Press START/STOP again before all the dots disappear. Recording continues for about 5 seconds from the moment you press START/STOP.

Notes on START/STOP mode

- If you have turned off the indicators on the LCD screen, the dots do not appear.
- You cannot use FADER in 5SEC or mode.

Shooting with the LCD screen

You can also record the picture while looking at the LCD screen.

When using the LCD screen, the viewfinder turns off automatically. You cannot monitor the sound from the speaker during recording.

(1) While pressing OPEN, open the LCD panel.

(2) Adjust the angle of the LCD panel.

The LCD panel moves about 90 degrees to this side and about 210 degrees to the other side.

To adjust the brightness of the LCD screen, press LCD BRIGHT.

+ side: to brighten the LCD screen

– side: to dim the LCD screen

The battery life is longer when the LCD panel is closed. Use the viewfinder instead of the LCD screen to save the battery power.

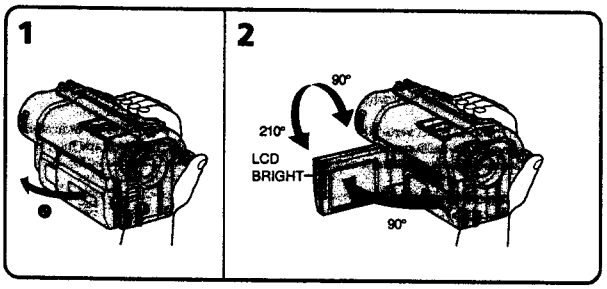

Backlighting the LCD screen

If the LCD screen is insufficiently illuminated even after adjusting LCD BRIGHT, select LCD B. L. in the menu system and set to BRIGHT. You can select LCD B. L. only while using the battery pack as a power source.

Notes on the LCD panel

- When closing the LCD panel, turn it vertically until it clicks **[a]**.
- When turning the LCD panel, turn it always vertically; otherwise, the camcorder body may be damaged or the LCD panel may not close properly **[b]**.
- Close the LCD panel completely when not in use.

[a]

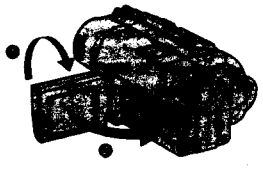

[b]

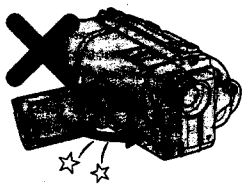

Letting the subject monitor the shot (Mirror mode)

You can turn the LCD panel over so that it faces the other way and you can let the subject monitor the shot while shooting with the viewfinder.

Turn the LCD panel vertically first until it clicks, then turn it over. The indicator appears on the LCD screen **(Mirror mode)** and the date and remaining tape indicators disappear.

To cancel mirror mode

Turn the LCD panel back toward the viewfinder.

Notes on mirror mode

- The picture on the LCD looks as a mirror-image while recording in mirror mode. The STBY indicator appears as ●II and REC as ●. The other indicators may not appear in mirror mode.
- While recording in mirror mode, you cannot operate the following buttons: TITLE, DATE, TIME and MENU.
- The date appears in reverse when the AUTO DATE feature is turned on. When recorded, it will be normal.

Hints for better shooting

For hand-held shots, you'll get better results by holding the camcorder according to the following suggestions:

- Hold the camcorder firmly and secure it with the grip strap so that you can easily manipulate the controls with your thumb.

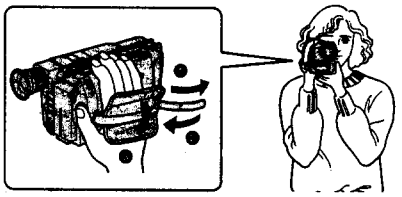

- Place your right elbow against your side.
- Place your left hand under the camcorder to support it. Be sure to not touch the built-in microphone.
- Place your eye firmly against the viewfinder eyecup.
- Use the viewfinder frame as a guide to determine the horizontal plane.
- You can also record in a low position to get an interesting angle. Lift the viewfinder up for recording from a low position **[a]**.
- You can also record in a low position or even in a high position using the LCD panel **[b]**.
- When you use the LCD screen outdoors in direct sunlight, the LCD screen may be difficult to see. If this happens, we recommend that you use the viewfinder.

[a]

[b]

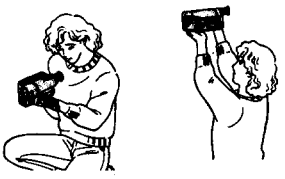

Hints for better shooting

Place the camcorder on a flat surface or use a tripod
Try placing the camcorder on a table top or any other flat surface of suitable height. If you have a tripod for a still camera, you can also use it with the camcorder.
When attaching a non-Sony tripod, make sure that the length of the tripod screw is less than 9/32 inch (6.5 mm). Otherwise, you cannot attach the tripod securely and the screw may damage the camcorder.

Cautions on the viewfinder and the LCD
- Do not pick up the camcorder by the viewfinder or by the LCD panel **[c]**.
- Do not place the camcorder so as to point the viewfinder or the LCD screen toward the sun. The inside of the viewfinder may be damaged. Be careful when placing the camcorder under sunlight or by a window **[d]**.

[c] **[d]**

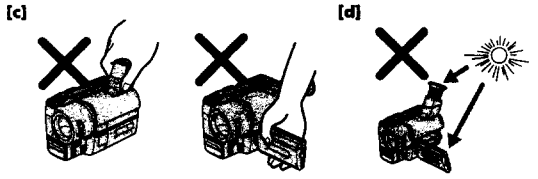

Checking the recorded picture

Using EDITSEARCH, you can review the last recorded scene or check the recorded picture in the viewfinder or on the LCD screen.
(1) While pressing the small green button on the POWER switch, set it to CAMERA.
(2) Turn STANDBY up to STANDBY.
(3) Press the – (⏪) side of EDITSEARCH momentarily; the last few seconds of the recorded portion play back **(Rec Review)**.
You can monitor the sound from the speaker, headphones (CCD-TRV65/TRV615 only) or an earphone (CCD-TRV15/TRV25/TRV35/TRV215/ only).
Hold down the – side of EDITSEARCH until the camcorder goes back to the scene you want. The last recorded portion is played back. To go forward, hold down the + side **(Edit Search)**.

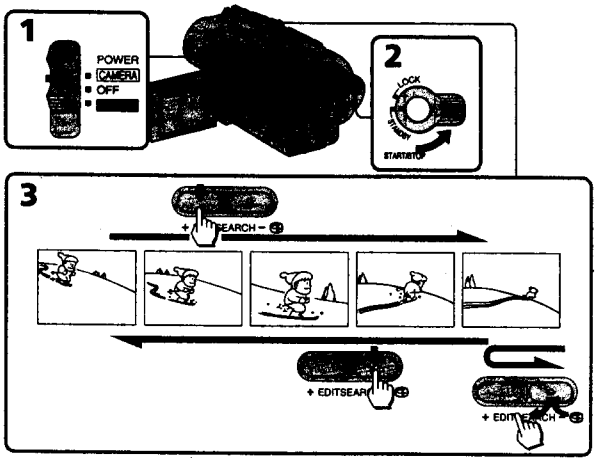

To stop playback
Release EDITSEARCH.

To go back to the last recorded point after edit search
Press END SEARCH. The last recorded point is played back for about 5 seconds (10 seconds in LP mode) and stops. Note that this function does not work once you eject the cassette after you recorded on the tape.

To begin re-recording
Press START/STOP. Re-recording begins from the point you released EDITSEARCH. Provided you do not eject the cassette, the transition between the last scene you recorded and the next scene you record will be smooth.

Playing back a tape

You can monitor the playback picture on the LCD screen.
(1) While pressing the small green button on the POWER switch, set it to VTR (CCD-TRV65/TRV615) or PLAYER (CCD-TRV15/TRV25/TRV35/TRV215).
The video control buttons light up (CCD-TRV35/TRV65 TRV615 only).
(2) Insert the recorded tape with the window facing out.
(3) While pressing OPEN, open the LCD panel. Adjust the angle of the LCD panel or the brightness of the LCD screen if necessary.
(4) Press ◀◀ to rewind the tape.
(5) Press ▶ to start playback.
(6) Adjust the volume using VOLUME and adjust the brightness of the LCD screen using LCD BRIGHT.
You can also monitor the picture on a TV screen, after connecting the camcorder to a TV or VCR.

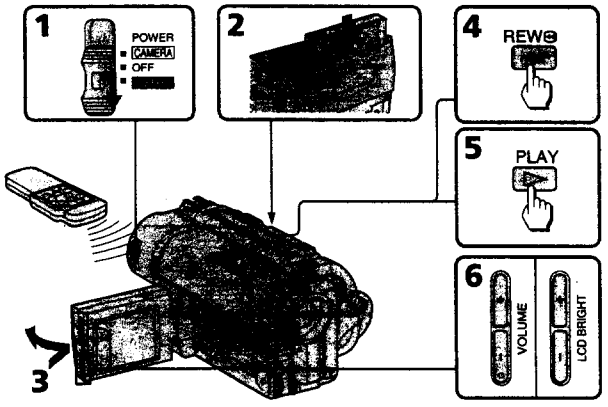

To stop playback, press ■.
To rewind the tape, press ◀◀.
To fast-forward the tape rapidly, press ▶▶.

When monitoring on the LCD screen
You can turn the LCD panel over and move back to the camcorder with the LCD screen facing out **[a]**. You can adjust the angle of the LCD screen by turning the LCD screen up to 15 degrees **[b]**.

[a] **[b]**

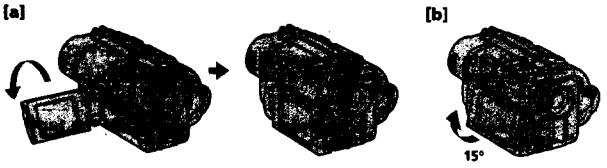

Using the remote commander
You can control playback using the supplied Remote Commander. Before using the Remote Commander, insert the size AA (R6) batteries.

Note on DISPLAY button
Press DISPLAY to display the screen indicators on the LCD screen. To erase the indicators, press DISPLAY again. If the POWER switch is set to CAMERA, you can erase the indicator by pressing DISPLAY.

Using headphones or an earphone
Connect headphones (not supplied) to the ∩ jack (CCD-TRV65/TRV615 only) or an earphone (not supplied) to the 🎧 jack (CCD-TRV15/TRV25/TRV35/TRV215 only). You can adjust the volume using VOLUME. When you use headphones or an earphone, the speaker on the camcorder is silent.

To view the playback picture in the viewfinder
Close the LCD panel. The viewfinder turns on automatically. When using the viewfinder, you can monitor sound only by using headphones or an earphone. To view on the LCD screen again, open the LCD panel. The viewfinder turns off automatically.

Note on the lens cover
The lens cover does not open when the POWER switch is set to VTR/PLAYER. Do not open the lens cover manually. It may cause malfunction.

Playing back a tape

You can enjoy clear pictures on the LCD screen during still, slow and picture search.
(Crystal-clear still/slow/picture search)

To view a still picture (playback pause)
Press ❚❚ during playback. To resume playback, press ❚❚ or ►.

To locate a scene (picture search)
Keep pressing ◄◄ or ►► during playback. To resume normal playback, release the button.

To monitor the high-speed picture while advancing the tape or rewinding (skip scan)
Keep pressing ◄◄ while rewinding or ►► while advancing the tape. To resume normal playback, press ►.

To view the picture at 1/5 speed (slow playback)
Press ❚► on the Remote Commander during playback. To resume normal playback, press ►. If slow playback lasts for about 1 minute, it shifts to normal speed automatically.

To select the playback sound
– CCD-TRV65/TRV615 only
Change the "HiFi SOUND" mode setting in the menu system.

Notes on playback
- Noise may appear when you use the crystal-clear still/slow/picture search function to play back the tape recorded in LP mode.
- Streaks appear and the sound is muted in the various playback modes.
- When playback pause mode lasts for 5 minutes, the camcorder automatically enters stop mode.
- You can play back the tapes recorded in the Hi8 video system on the standard 8 mm camcorder (CCD-TRV15/TRV25/TRV35/TRV215 only).

Searching for the end of the picture

You can go to the end of the recorded portion after you record and play back the tape to make the transition between the last scene you recorded and the next scene smooth.
The tape starts rewinding or fast-forwarding and the last 5 seconds (10 seconds in LP mode) of the recorded portion play back. Then the tape stops at the end of the recorded picture **(End Search)**.
Note that the End Search function does not work once you eject the cassette after you have recorded on the tape.
(1) While pressing OPEN, open the LCD panel.
(2) Press END SEARCH.
This function works when the POWER switch is set to either CAMERA or VTR/PLAYER.

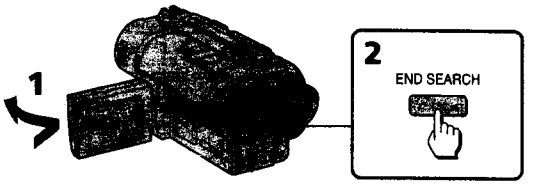

If you start recording after using END SEARCH
Occasionally, the transition between the last scene you recorded and the next scene may not be smooth.

Advanced operations

Using alternative power sources

You can choose any of the following power sources for your camcorder: battery pack, house current, alkaline batteries (CCD-TRV15/TRV25/TRV35/TRV65 only) and 12/24 V car battery. Choose the appropriate power source depending on where you want to use your camcorder.

Place	Power source	Accessory to be used
Indoors	House current	Supplied AC power adaptor
Outdoors	Battery pack	Battery pack NP-F330 (supplied), NP-F530, NP-F550, NP-F730, NP-F730H, NP-F750, NP-F930, NP-F950
	Size AA (LR6) Alkaline battery	Supplied battery case (CCD-TRV15/TRV25/TRV35/TRV65 only)
In the car	12 V or 24 V car battery	Sony car battery charger DC-V515A

Notes on power sources
- Disconnecting the power source or removing the battery pack during recording or playback may damage the inserted tape.
- The DC IN jack has power source priority. This means that the battery pack cannot supply any power if the power cord is connected to the DC IN jack, even when the power cord is not plugged into a wall outlet.

(1) Open the DC IN jack cover, and connect the AC power adaptor to the DC IN jack on the camcorder.
(2) Connect the power cord to the AC power adaptor.
(3) Connect the power cord to a wall outlet.

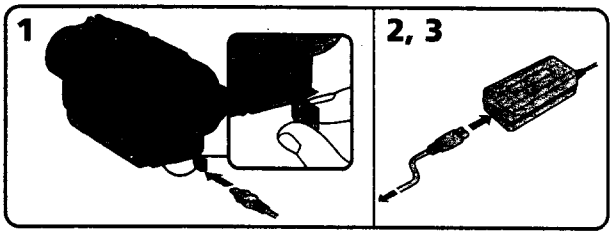

WARNING
The power cord must only be changed at a qualified service shop.

PRECAUTION
The set is not disconnected from the AC power source (house current) as long as it is connected to the wall outlet, even if the set itself has been turned off.

Note
Keep the AC power adaptor away from the camcorder if the picture is disturbed.

Using alternative power sources

– CCD-TRV15/TRV25/TRV35/TRV65 only
Use the battery case (supplied) and six size AA (LR6) Sony Alkaline batteries (not supplied).
(1) Remove the battery holder from the battery case.
(2) Insert six new alkaline batteries into the battery holder, following the marking on the holder to be sure the batteries are installed in the correct direction.
(3) Insert the battery holder with the alkaline batteries.
(4) Insert the battery case with the alkaline batteries to the battery mounting surface of the camcorder in the same way as the battery pack.

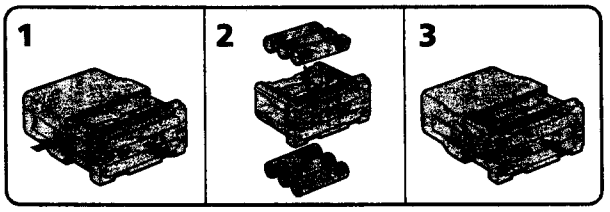

Battery life
Using alkaline batteries at 77°F (25°C).
Upper numbers are the time when recording with the viewfinder. Lower numbers are the time when recording with the LCD screen.

CCD-	TRV15	TRV25/TRV35	TRV65
Continuous recording time	305 min. 210 min.	285 min. 200 min.	265 min. 190 min.
Typical recording time	160 min. 115 min.	150 min. 110 min.	140 min. 100 min.

PRECAUTION
When the battery case is installed with the camcorder, do not connect the AC power adaptor to the camcorder.

Notes
- You may not use the battery case in cold environment.
- The battery life may be shorter depending on the using environment.
- The above battery lives are estimates. The battery life may be shorter depending on the storage condition of the battery before being purchased and temperature.

To remove the battery case
The battery case is removed in the same way as the battery pack.
When you replace the batteries, be sure to remove the battery case from the camcorder to prevent malfunction.
Remove the battery case after using it.

Use Sony DC-V515A car battery charger (not supplied). Connect the car battery cord to the cigarette lighter socket of a car (12 V or 24 V).
Refer to the operating instructions of your car battery charger.

To remove the car battery charger
The car battery charger is removed in the same way as the battery pack.

This mark indicates that this product is a genuine accessory for Sony video products.
When purchasing Sony video products, Sony recommends that you purchase accessories with this "GENUINE VIDEO ACCESSORIES" mark.

Changing the mode settings

You can change the mode settings in the menu system to further enjoy the features and functions of the camcorder.
(1) Press MENU to display the menu.
(2) Turn the control dial to select the desired icon in the left side of the menu, then press the dial.
(3) Turn the control dial to select the desired item, then press the dial.
(4) Turn the control dial to select the desired mode, and press the dial. If you want to change the other modes, repeat steps 3 and 4. If you want to change the other items, select ⮐ RETURN and press the dial, then repeat steps from 2 to 4.
(5) Press MENU or select ⮐ icon to erase the menu display.

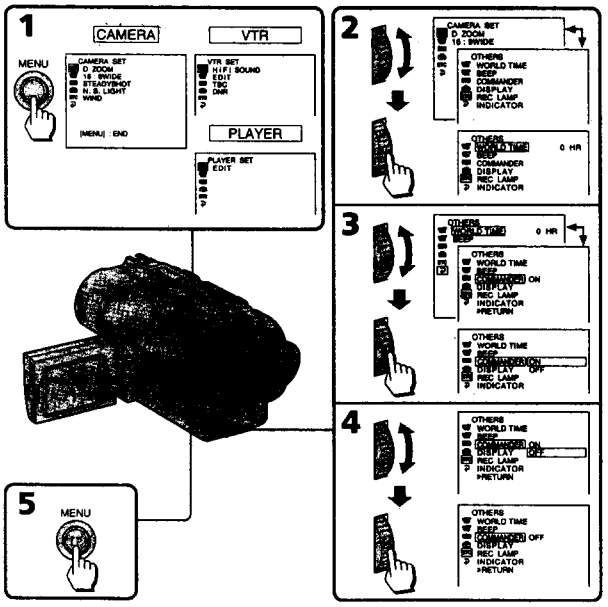

Note on the menu display
Depending on the model of your camcorder, the menu display may be different from that in this illustration.

Notes on changing the mode setting
- Menu items differ depending on the setting of the POWER switch to VTR/PLAYER or CAMERA.
- When you let the subject monitor the shot (mirror mode), the menu display does not appear.

Selecting the mode setting of each item

Items for both CAMERA and VTR/PLAYER modes

LCD B. L.* <BRT NORMAL/BRIGHT>
- Normally select BRT NORMAL.
- Select BRIGHT when the LCD screen is dark.

When you select BRIGHT, battery life is about 10 percent shorter during recording.
When you use the power sources other than the battery pack, BRIGHT is automatically selected, and LCD B.L. is not displayed in the menu.

LCD COLOR*
Select this item to adjust the color on the LCD screen.

REC MODE* <SP/LP>
- Select SP when recording in SP (standard play) mode.
- Select LP when recording in LP (long play) mode.

When a tape recorded on this camcorder in LP mode is played back on other types of 8mm camcorders or VCRs, the playback quality may not be as good as that on this camcorder.
In PLAYER mode, this item is not displayed in the menu (CCD-TRV15/TRV25/TRV35/TRV215 only).

REMAIN* <AUTO/ON>
- Select AUTO when you want to display the remaining tape bar
  - for about 8 seconds after the camcorder is turned on and calculates the remainder of the tape.
  - for about 8 seconds after a cassette is inserted and the camcorder calculates the remainder of the tape.
  - for about 8 seconds after ► is pressed in VTR/PLAYER mode.
  - for about 8 seconds after DISPLAY is pressed to display the screen indicators.
  - for the period of tape rewinding, forwarding or picture search in VTR/PLAYER mode.
- Select ON to always display the remaining tape indicator.

AUTO TV ON* <ON/OFF> (CCD-TRV35/TRV65/ TRV615 only)
You can use this feature only with Sony TVs.
- Select ON to turn on the TV automatically when using the LASER LINK function.
- Select OFF not to turn on the TV.

TV INPUT* <VIDEO1/VIDEO2/VIDEO3/OFF> (CCD-TRV35/TRV65/TRV615 only)
Select 1 or 2 or 3 of the video input on the TV which the IR receiver (not supplied) is connected to when using the LASER LINK function.

LTR SIZE* <NORMAL/2x>
- Normally select NORMAL.
- Select 2x to display selected menu item by twice size of normal.

BEEP* <ON/OFF>
- Select ON so that beeps sound when you start/stop recording, etc.
- Select OFF when you do not want to hear the beep sound.

COMMANDER <ON/OFF>
- Select ON when using the supplied Remote Commander for the camcorder.
- Select OFF when not using the Remote Commander.

DISPLAY* <LCD or V-OUT/LCD>
- Normally select LCD. The display appears on the LCD screen.
- Select V-OUT/LCD to show the display both on the TV screen and LCD screen.

INDICATOR*.<BL ON/BL OFF> (CCD-TRV65/TRV615 only)
- Select BL ON to light up the display window.
- Select BL OFF to turn off the back light of display window.

When you use the AC power adaptor as a power source, this item is not displayed in the menu.

Items for CAMERA mode only

D ZOOM* <ON/OFF>
- Select ON to activate digital zooming.
- Select OFF to not use the digital zoom. The camcorder goes back to 16x (CCD-TRV15/TRV25/TRV215) or 18x (CCD-TRV35/TRV65/ TRV615) zoom.

16:9WIDE* <OFF/CINEMA/16:9FULL>
- Normally select OFF.
- Select CINEMA to record in CINEMA mode.
- Select 16:9FULL to record in 16:9FULL mode.

STEADYSHOT* <ON/OFF> (CCD-TRV25/TRV35/TRV65/TRV215/TRV615 only)
- Normally select ON.
- Select OFF to release the Steady Shot function.

N.S.LIGHT* <ON/OFF> (CCD-TRV35/TRV65/ TRV615 only)
- Normally select ON.
- Select OFF to not use the NightShot Light function.

WIND <ON/OFF> (CCD-TRV65/TRV615 only)
- Select ON to reduce wind noise when recording in strong wind.
- Normally select OFF.

ORC TO SET*
Select this item to automatically adjust the recording condition to get the best possible recording.
If you have already performed this function, "ORC ON" is displayed.

CLOCK SET*
Reset the date or time.

AUTO DATE* <ON/OFF>
- Select ON to record the date for 10 seconds after recording has started.
- Select OFF to not record the date.

DEMO MODE* <ON/OFF>
- Select ON to make the demonstration appear.
- Select OFF to deactivate the demonstration mode.

Notes on DEMO MODE
- DEMO MODE is set to STBY (Standby) at the factory and the demonstration starts about 10 minutes after you set the POWER switch to CAMERA without inserting a cassette.
  Note that you cannot select STBY of DEMO MODE in the menu system.
- You cannot select DEMO MODE when a cassette is inserted in the camcorder.
- If you insert a cassette during the demonstration, the demonstration stops. You can start recording as usual. DEMO MODE automatically returns to STBY.
- When NIGHTSHOT is set to ON, "NIGHTSHOT" appears in the viewfinder or on the LCD screen and you cannot select DEMO MODE (CCD-TRV35/TRV65/TRV615 only).

To look at the demonstration at once
Eject the cassette, if inserted. Select ON of DEMO MODE and erase the menu display. The demonstration will begin.
When you turn off the camcorder once, DEMO MODE automatically returns to STBY.

WORLD TIME*
Select this item to set the clock by a time difference.

REC LAMP* <ON/OFF>
- Select OFF when you do not want the camera recording/battery lamp at the front of the unit to light up.
- Normally select ON.

Items for VTR/PLAYER mode only

HiFi SOUND <STEREO/1/2> (CCD-TRV65/TRV615 only)
- Normally select STEREO.
- Select 1 or 2 to play back a dual sound track tape.

/ EDIT <ON/OFF>
- Select ON to minimize picture deterioration when editing.
- Normally select OFF.

TBC* <ON/OFF> (CCD-TRV65/TRV615 only)
- Normally select ON, to correct for jitter.
- Select OFF to not correct for jitter. The picture may not be steady when played back.

Note on TBC setting
Set TBC to OFF when:
- Playing back a tape you have dubbed over.
- Playing back a tape on which you recorded the signal of a TV game or similar machine.
- The playback picture fluctuates.

DNR* <ON/OFF> (CCD-TRV65/TRV615 only)
- Normally select ON to reduce picture noise.
- Select OFF if the picture has a lot of movement, causing a conspicuous afterimage.

The following settings work only during playback
EDIT, HiFi SOUND, TBC, and DNR.

* These settings are retained even when the battery is removed, as long as the lithium battery is in place.

Shooting with backlighting

When you shoot a subject with the light source behind the subject or a subject with a light background, use the BACK LIGHT function.

Press BACK LIGHT. The ▣ indicator appears in the viewfinder or on the LCD screen.

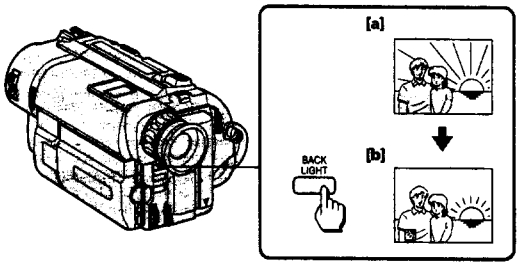

[a] Subject is too dark because of backlight.
[b] Subject becomes bright with backlight compensation.

After shooting

Be sure to release this adjustment condition by pressing BACK LIGHT again. The ▣ indicator disappears. Otherwise, the picture will be too bright under normal lighting condition.

This function is also effective under the following conditions:
- A subject with a light source nearby or a mirror reflecting light
- A white subject against a white background. Especially when you shoot a person wearing shiny clothes made of silk or synthetic fiber, his or her face tends to become dark if you do not use this function.

To make a fine adjustment

You can adjust the exposure manually. However, when you adjust the exposure manually, BACK LIGHT does not operate.

Using the FADER function

– CCD-TRV35/TRV65/TRV615 only

Selecting the fader function

You can fade in or out to give your recording a professional appearance.
When the picture fades in, the sound gradually increases. When the picture fades out, the sound gradually decreases.

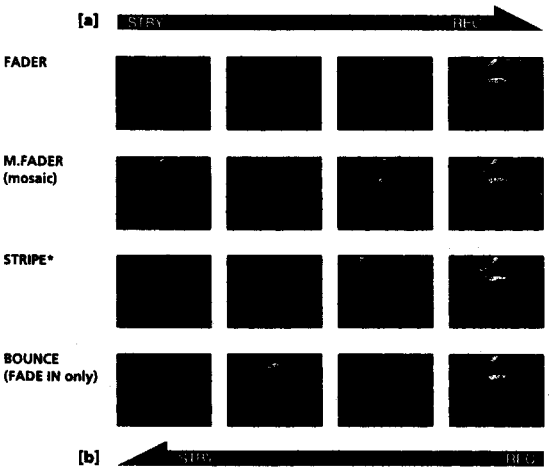

MONOTONE
When fading in, the picture gradually changes from black and white to color.
When fading out, the picture gradually changes from color to black and white.

* CCD-TRV65/TRV615 only

Using the fader function

When fading in [a]

(1) While the camcorder is in Standby mode, press FADER until the desired fade indicator flashes.
(2) Press START/STOP to start recording. The fade indicator stops flashing.

When fading out [b]

(1) During recording, press FADER until the desired fade indicator flashes.
(2) Press START/STOP to stop recording. The fade indicator stops flashing, and then recording stops.

The fading mode selected last is indicated first of all.

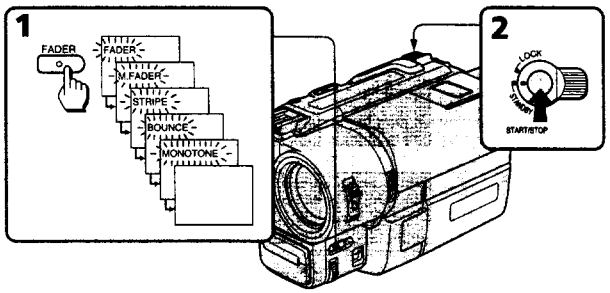

Note on the bounce function

When you use the following functions or D ZOOM is set to ON in the menu system, "BOUNCE" indicator does not appear.
- Wide mode
- Functions using the PICTURE EFFECT button
- Functions using the PROGRAM AE button

To cancel the fader function

Before pressing START/STOP, press FADER until the indicator disappears.

When the date or time indicator or title is displayed

The date or time indicator and title do not fade in or fade out.

When the START/STOP MODE switch is set to 5SEC or ⊥

You cannot use the fader function.

Note on the fader function

While using the bounce function, you cannot use the following functions.
- Exposure
- Focus
- Zoom

Shooting in the dark (NightShot)

– CCD-TRV35/TRV65/TRV615 only

The NightShot function enables you to shoot a subject in a dark place. You can achieve a satisfactory recording of the ecology of nocturnal animals for observation with this function.
This function may record picture nearly in monochrome.

(1) While the camcorder is in Standby mode, slide NIGHTSHOT to ON.
(2) Press START/STOP to start recording.
■ and "NIGHTSHOT" indicators flash.

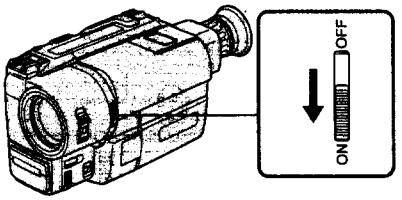

To cancel the NightShot function

Slide NIGHTSHOT to OFF.

Using the N.S.Light

When you set N.S.LIGHT to ON in the menu system, the picture will be more clear. The maximum limit of NightShot Light is about 10 feet (about 3 meters).

Notes on the NightShot

- When you keep setting NIGHTSHOT to ON in normal recording, picture may be recorded in incorrect/unnatural color.
- If focusing is difficult with the autofocus mode when using the NightShot function, focus manually.

Using the wide mode function

Selecting the desired mode

You can record a cinemalike picture (CINEMA) or a 16:9 wide picture to watch on the 16:9 wide-screen TV (16:9 FULL).

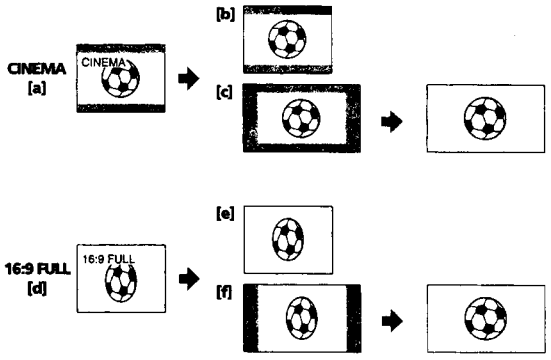

CINEMA

Black bands appear at the top and the bottom of the screen, and the viewfinder or LCD screen **[a]** and a normal TV screen **[b]** look wide. You can also watch the picture without black bands on a wide-screen TV **[c]**.

16:9 FULL

The picture in the viewfinder or LCD screen **[d]** or on a normal TV **[e]** is horizontally compressed. You can watch the picture of normal images on a wide-screen TV **[f]**.

Using the wide mode function

You can select the wide mode (OFF, CINEMA, 16:9FULL) in the menu system (p. 29).

To cancel wide mode

Select OFF in the menu system.

To watch the tape recorded in wide mode

To watch the tape recorded in CINEMA mode, set the screen mode of the wide-screen TV to zoom mode. To watch the tape recorded in 16:9 FULL mode, set it to full mode. For details, refer to the instruction manual of your TV.
Note that the picture recorded in 16:9 FULL mode looks compressed on a normal TV.

Notes on wide mode

- If wide mode is set to 16:9FULL, the Steady Shot function does not work and the ☞ indicator flashes (CCD-TRV25/TRV35/TRV65/TRV215/TRV315/TRV615 only).
- In wide mode, you cannot select the bounce function with FADER (CCD-TRV35/TRV65/TRV615 only).
- When you record in 16:9 FULL mode, the date or time indicator will be widened on the wide-screen TV.
- If you dub a tape, the tape is copied in the same mode as the original recording.
- The wide mode is cancelled automatically 5 minutes after you remove the power source.
- When recording, you cannot change the mode.

Using the PROGRAM AE function

Selecting the best mode

You can select one of six PROGRAM AE (Auto Exposure) modes to suit your shooting situation, referring to the following.

● **Spotlight mode**
For subjects in spotlight, such as at the theater or a formal event.

Soft Portrait mode
For zooming in on a still subject in telephoto mode, or for a subject behind an obstacle such as a screen. Creates a soft background for subjects such as people or flowers, and faithfully reproduces skin color.

Sports Lesson mode
For recording fast-moving subjects such as in tennis or golf games.

Beach & Ski mode
For people or faces in strong light or reflected light, such as at a beach in midsummer or on a ski slope.

Sunset & Moon mode
For recording subjects in dark environments such as sunsets, fireworks, neon signs, or general night views.

Landscape mode
For distant subjects such as mountains or when recording a subject behind an obstacle such as a window or screen.

Using the PROGRAM AE function

(1) Press PROGRAM AE.
(2) Turn the control dial to select the desired PROGRAM AE mode.

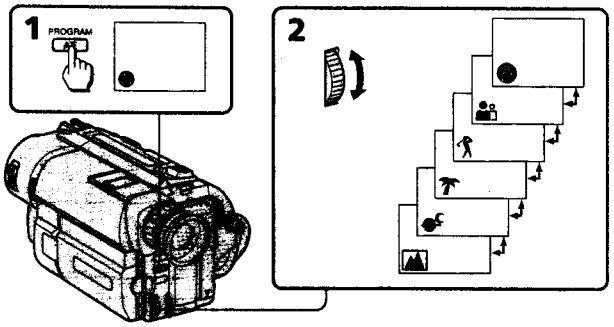

To turn off program AE

Press PROGRAM AE.

Notes on focus setting

- In the Spotlight, Sports lesson and Beach & Ski modes, you cannot take close-ups because the camcorder is set to focus only on subjects in the middle to far distance.
- In the Sunset & Moon and Landscape modes, the camcorder is set to focus only on distant subjects.

Focusing manually

– CCD-TRV35/TRV65/TRV615 only

When to use manual focus

In the following cases you should obtain better results by adjusting the focus manually.

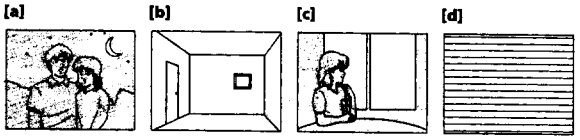

- Insufficient light **[a]**
- Subjects with little contrast - walls, sky, etc. **[b]**
- Too much brightness behind the subject **[c]**
- Horizontal stripes **[d]**
- Subjects through frosted glass
- Subjects beyond nets, etc.
- Bright subject or subject reflecting light
- Shooting a stationary subject when using a tripod

Focusing manually

When focusing manually, first focus in telephoto before recording, and then reset the shot length.

(1) Set FOCUS to MANUAL. The indicator appears in the viewfinder or on the LCD screen.
(2) Move the power zoom lever to the "T" side on the optical zoom zone until the lever reaches the end.
(3) Turn the NEAR/FAR dial to achieve a sharp focus.
(4) Set the desired shot length using the power zoom lever.

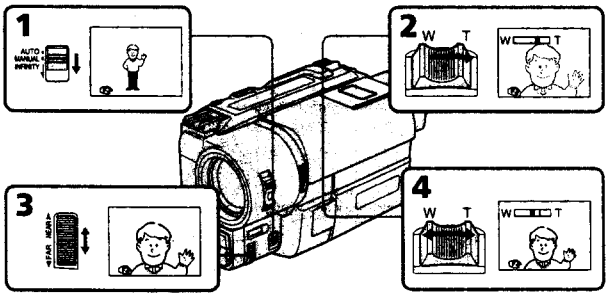

To return to autofocus mode

Set FOCUS to AUTO. The indicator in the viewfinder or on the LCD screen disappears.

Shooting in relatively dark places

Shoot at wide-angle after focusing in the telephoto position.

To record a very distant subject

Push FOCUS down to INFINITY. The lens focuses on the most distant subject while FOCUS is held down. When it is released, manual focus mode is resumed.
Use this function when shooting through a window or a screen, to focus on a most distant subject.

Note on manual focusing

The following indicators may appear:
▲ when recording a very distant subject.
▲ when the subject is too close to focus on.

Enjoying picture effect

Selecting picture effect

You can make pictures like those of television with the Picture Effect function.

[a] [b] [c] [d] [e] [f]

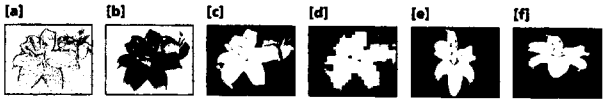

PASTEL [a]
The contrast of the picture is emphasized, and the picture looks like an animated cartoon.

NEG. ART [b]
The color and brightness of the picture is reversed.

SEPIA
The picture is sepia.

B&W
The picture is monochrome (black and white).

SOLARIZE [c]
The light intensity is more clear, and the picture looks like an illustration.

MOSAIC [d]
The picture is mosaic.

SLIM [e]
The picture expands vertically.

STRETCH [f]
The picture expands horizontally.

Using picture effect function

(1) Press PICTURE EFFECT.
(2) Turn the control dial to select the desired picture effect mode.

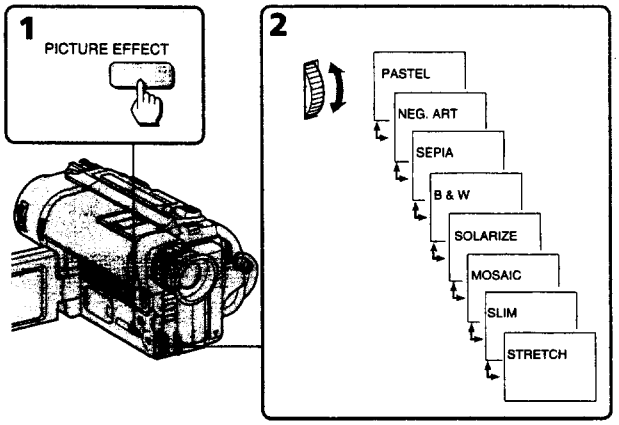

To turn off picture effect

Press PICTURE EFFECT. The indicator in the viewfinder or on the LCD screen goes out.

Note on the picture effect
When you turn the power off, the camcorder returns automatically to normal mode.

Adjusting the exposure

– CCD-TRV35/TRV65/ TRV615 only

When to adjust the exposure

Adjust the exposure manually under the following cases.

[a] [b]

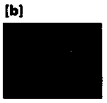

[a]
• The background is too bright (back lighting)
• Insufficient light: most of the picture is dark

[b]
• Bright subject and dark background
• To record the darkness faithfully

Adjusting the exposure

(1) Press EXPOSURE.
(2) Turn the control dial to adjust the brightness.

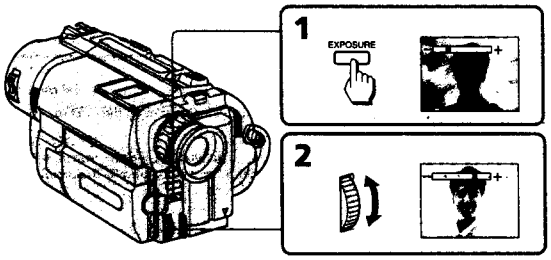

To return to automatic exposure mode

Press EXPOSURE again.

Shooting with the sun behind you
If the light source is behind your subject, or in the following situations, the subject will be recorded too dark.
• The subject is indoors and there is a window behind the subject.
• Bright light sources are included in the scene.
• When shooting a person wearing white or shiny clothes in front of a white background, the face will be recorded too dark.

Shooting in the dark
We recommend you to use a video light (not supplied). To get the best color, you must maintain a sufficient light level.

When you adjust the exposure manually
• BACK LIGHT does not work.
• If you change the PROGRAM AE mode, the camcorder automatically returns to automatic exposure mode.

Superimposing a title

You can select one of eight preset titles and two custom titles. You can also select the language, color, size and position of titles.

Superimposing titles

(1) Press TITLE to display the title menu.
(2) Turn the control dial to select 🗀, then press the dial.
(3) Turn the control dial to select the desired title, then press the dial. The titles are displayed in the language you selected.
(4) Turn the control dial to select the color, size, or position, then press the dial.
(5) Turn the control dial to select the desired item, then press the dial.
(6) Repeat step 4 and 5 until the title is arranged as desired.
(7) Press control dial again to complete the setting.
(8) When you want to stop recording the title, press TITLE.

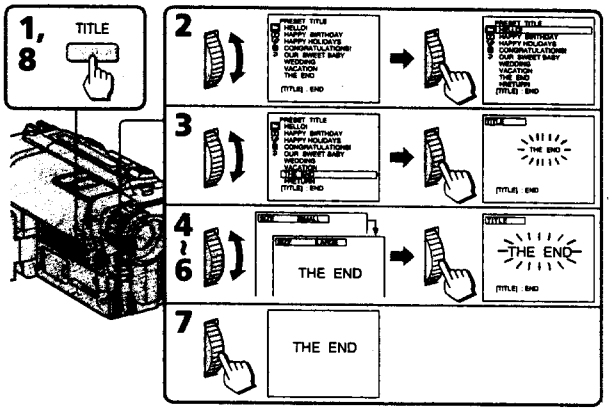

To superimpose the title from beginning
After step 7, press START/STOP to start recording.

To superimpose the title while you are recording
After pressing START/STOP to start recording, start from step 1. In this case, beep is not heard.

To select the language of preset title
When you want to select the language, select 🗀 before step 2. Then select language and return to step 2.

To use the custom title
When you want to use the custom title, select 🗀 in step 2.

Notes on superimposing a title
- If you have not given any custom title, "- - - - ..." appears on the display.
- The FADER function works while the title is displayed, however, the title does not fade (CCD-TRV35/TRV65/TRV315/TRV615 only).
- If you display the menu or title menu while superimposing a title, the title is not recorded while the menu or title menu is being displayed.

Title color changes as follows :
WHITE ⟷ YELLOW ⟷ VIOLET ⟷ RED ⟷ CYAN ⟷ GREEN ⟷ BLUE

Title size changes as follows :
SMALL ⟷ LARGE

Title position changes as follows :
When you select the title size "SMALL", you can choose 9 positions. When you select the title size "LARGE" you can choose 8 positions.

Notes on the title
- Depending on size or position of the title, both of date and time or either of them is not displayed.
- If you input 13 characters or more for a LARGE title, the title is automatically reduced into a proper size after the position is set.
- When the title is displayed, LCD BRIGHT and VOLUME indicators do not appear.

Making your own titles

You can make up to two titles and store them in the camcorder. We recommend to set the POWER switch to VTR/PLAYER or eject the cassette before you begin.
Your title can have up to 20 characters.
(1) Press TITLE to display the title menu.
(2) Turn the control dial to select 🖉, then press the dial.
(3) Turn the control dial to select the first line (CUSTOM1) or second line (CUSTOM2), then press the dial.
(4) Turn the control dial to select the column of the desired character, then press the dial.
(5) Turn the control dial to select the desired character, then press the dial.
(6) Repeat step 4 and 5 until you finish the title.
(7) For finishing the titling work, turn the control dial to select SET, then press the dial.

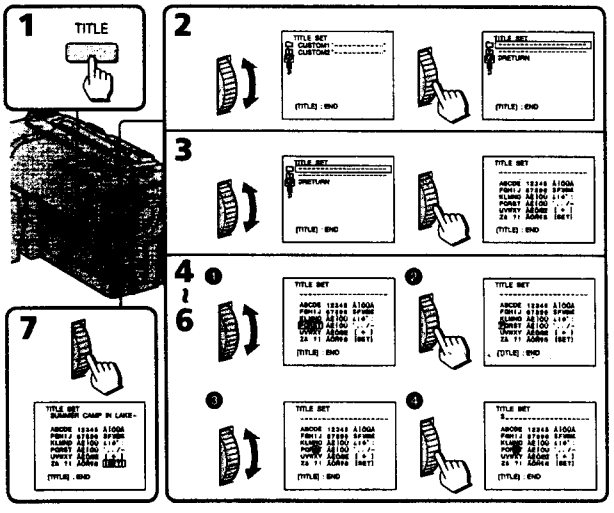

To edit a title you have stored
In step 3, select CUSTOM1 or CUSTOM2, depending on which title you want to edit, then change the title.

Note
You can not enter over 20 characters title.

If you take 5 minutes or longer to enter characters while a cassette is in the camcorder
The power goes off automatically. Characters you have entered remain. Turn STANDBY down once and then up again, then proceed from step 1.

To delete a title
In step 4, turn the control dial to select [←] then press the dial. The last character is erased. Repeat this step until all characters are deleted. Do not erase the title by selecting empty spaces. If you do so, a title full of empty spaces is stored.

Recording with the date/time

Before you start recording or during recording, press DATE or TIME. You can record the date or time displayed in the viewfinder or on the LCD screen with the picture. Press DATE (or TIME), then press TIME (or DATE) to display the date and time together.
The clock is set to East Coast Standard time at the factory. You can reset the clock in the menu system.

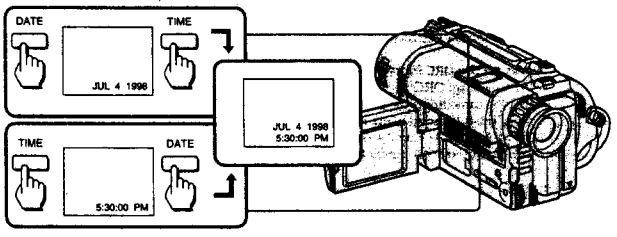

To stop recording with the date and/or time
Press DATE and/or TIME again. The date and/or time indicator disappears. The recording continues.

Optimizing the recording condition

Use this feature to check the tape condition before recording, so that you can get the best possible picture (ORC).

(1) While the camcorder is in Standby mode, press MENU to display the menu.
(2) Turn the control dial to select [ORC], then press the dial.
(3) Turn the control dial to select ORC TO SET, then press the dial.
"START/STOP KEY" flashes.
(4) Press START/STOP.
The camcorder takes about 5 to 10 seconds to check the tape condition and then returns to Standby mode.

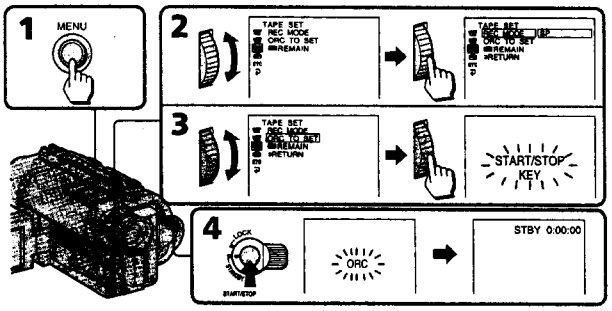

Each time you insert the cassette

Perform the above procedures.

Notes on the ORC function

- When you set ORC TO SET, the recording on the tape is erased for about 0.1 second so that the camcorder can check the tape condition. Be careful when you use a recorded tape. The 0.1 second blank is erased if you record from the point where you set ORC TO SET for more than 2 seconds, or if you record over the blank.
- You cannot use this function on a tape with the red mark on the cassette exposed.

Releasing the STEADY SHOT function

– CCD-TRV25/TRV35/TRV65/TRV215/TRV615 only

When the Steady Shot function is working, the camcorder compensates for camera-shake.

You can release the Steady Shot function when you do not need to use the Steady Shot function. The "[hand]" indicator appear in the viewfinder or on the LCD screen. Do not use the Steady Shot function when shooting a stationary object with a tripod.
You can select ON or OFF in the menu system (p. 29).

To activate the Steady Shot function again

Set STEADYSHOT to ON in the menu system.

Notes on the Steady Shot function

- The Steady Shot function will not correct excessive camera-shake.
- When you set STEADYSHOT ON or OFF in the menu system, the exposure may fluctuate.
- Steady Shot does not operate in 16:9 FULL mode. If you set STEADYSHOT to ON in the menu system, the "[hand]" indicator flashes.

Watching on a TV screen

Connect the camcorder to your TV or VCR to watch the playback picture on the TV screen. When monitoring the playback picture by connecting the camcorder to your TV, we recommend you to use house current for the power source.

While playing back on a TV screen, close the LCD panel. Otherwise, picture distortion may occur.

Connecting directly to a TV/VCR with Video/Audio input jacks

When connecting the A/V connecting cable, make sure you connect the plug to jacks of the same color.
Open the jack cover. With using the supplied A/V connecting cable, connect the camcorder to the LINE IN inputs on the TV or VCR connected to the TV. Set the TV/VCR selector on the TV to VCR. When connecting to the VCR, set the input selector on the VCR to LINE.

CCD-TRV15/TRV25/TRV35/TRV215

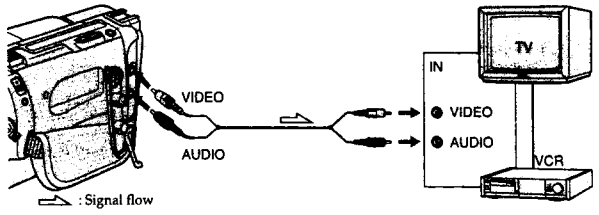

CCD-TRV65/TRV615

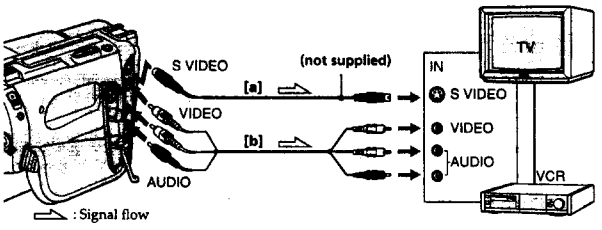

– CCD-TRV65/TRV615 only

If your TV or VCR has an S video jack, connect using the S video cable (not supplied) **[a]** to obtain a high quality picture . If you are going to connect the camcorder using the S video cable (not supplied) **[a]**, you do not need to connect the yellow (video) plug of the A/V connecting cable **[b]**.

If your TV or VCR is a monaural type
– CCD-TRV65/TRV615 only

Connect only the white plug for audio on both the camcorder and the TV or the VCR. With this connection, the sound is monaural even in stereo model.

To connect to a TV or VCR without Video/Audio input jacks

Use an RFU-95UC RFU adaptor (not supplied).

Using the AV cordless IR receiver

–CCD-TRV35/TRV65/TRV615 only

Once you connect the AV cordless IR receiver (not supplied) having the LASER LINK mark to your TV or VCR, you can easily view the picture on your TV. For details, refer to the operating instructions of the AV cordless IR receiver.
LASER LINK is a system which transmits and receives a picture and sound between video equipment having the mark by using infrared rays.
LASER LINK is a trademark of Sony Corporation.

To play back on a TV

(1) After connecting your TV and AV cordless IR receiver, set the POWER switch on the AV cordless IR receiver to ON.
(2) Set the POWER switch on the camcorder to VTR/PLAYER.
(3) Turn the TV on and set the TV/VCR selector on the TV to VCR.
(4) Press LASER LINK. The lamp of the LASER LINK button lights up.
(5) Press ► on the camcorder to start playback.
(6) Point the LASER LINK emitter at the AV cordless IR receiver.

To cancel the LASER LINK function

Press LASER LINK.

If you use a Sony TV

- You can turn on the TV automatically when you press the LASER LINK or ► button. To do so, set the AUTO TV ON to ON in the menu system and turn the TV's main switch on, then do either of the following;
  - Point the LASER LINK emitter towards the TV's remote sensor and press LASER LINK.
  - Turn on the LASER LINK button and press ►.
- You can switch the video input of the TV automatically to the one which the AV cordless IR receiver is connected. To do so, set the AUTO TV ON to ON and the TV INPUT to the same video input (1,2,3) in the menu system. With some models, however the picture and sound may be disconnected momentarily when the video input is switched.
- The above feature may not work with some TV models.

Note

When LASER LINK is activated (the LASER LINK button is lit), the camcorder consumes power. Press and turn off the LASER LINK button when it is not needed.

Recording from a VCR or TV

–CCD-TRV65/TRV615 only

You can record a tape from another VCR or a TV program from a TV that has video/audio outputs. Connect the camcorder to the VCR or TV using the supplied A/V cable. Turn down the volume of the camcorder while editing. Otherwise, picture distortion may occur.
(1) While pressing the small green button on the POWER switch, set it to VTR.
(2) Set DISPLAY to LCD in the menu system. Then press ● REC and the button on the right together on the camcorder at the point where you want to start recording.
In recording and recording pause mode, S video and VIDEO/AUDIO jacks automatically work as input jacks.

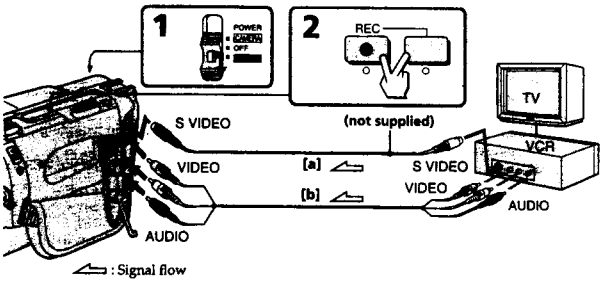

If your VCR or TV has an S video jack, connect using the S video cable (not supplied) **[a]** to obtain a high quality picture.

If your VCR or TV is a monaural type, connect only the white plug for audio on both the camcorder and the VCR or TV.
If your VCR or TV does not have an S VIDEO OUT jack, connect cable **[b]**. Do not connect the S video cable (not supplied) **[a]** to the camcorder.

To stop recording

Press ■.

Note on recording

You cannot record a picture that has a copyright control signal for copyright protection of software. "COPY INHIBIT" appears if you try to record such a picture.

Editing onto another tape

You can create your own video program by editing with any other 8 mm, Hi8, VHS, S-VHS, VHSC, S-VHSC, Betamax or ED Betamax VCR that has video/audio inputs.

Before editing

Connect the camcorder to the VCR using the supplied A/V connecting cable.
Set the input selector on the VCR to LINE, if available.
Set EDIT to ON in the menu system (p. 29).

Starting editing

Turn down the volume of the camcorder while editing. Otherwise, picture distortion may occur.
(1) Insert a blank tape (or a tape you want to record over) into the VCR, and insert your recorded tape into the camcorder.
(2) Play back the recorded tape on the camcorder until you locate the point just before where you want to start editing, then press ❚❚ to set the camcorder in playback pause mode.
(3) On the VCR, locate the recording start point and set the VCR in recording pause mode.
(4) First press ❚❚ on the camcorder, and after a few seconds press ❚❚ on the VCR to start editing.

To edit more scenes

Repeat steps 2 to 4.

To superimpose the title while you are editing

You can superimpose the title while you are editing. Refer to "Superimposing a title" (p. 48).

To stop editing

Press ■ on both the camcorder and the VCR.

Note on Fine Synchro Edit

If you connect a video deck that has the Fine Synchro Edit feature to the LANC jack of the camcorder, using a LANC cable (not supplied), the edit will be even more precise.

Additional information

Changing the lithium battery in the camcorder

Your camcorder is supplied with a lithium battery installed. When the battery becomes weak or dead, the indicator flashes in the viewfinder for about 5 seconds when you set the POWER switch to CAMERA. In this case, **replace the battery with a Sony CR2025 or Duracell DL-2025 lithium battery. Use of any other battery may present a risk of fire or explosion.** Discard used batteries according to the manufacturer's instructions.
The lithium battery for the camcorder lasts for about 1 year under normal operation. (The lithium battery that comes installed at the factory may not last 1 year.)

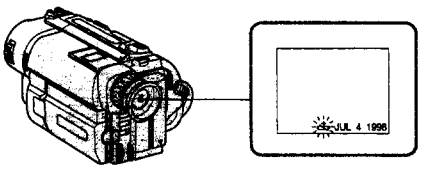

Notes on lithium battery

- **Keep the lithium battery out of the reach of children. Should the battery be swallowed, immediately consult a doctor.**
- Wipe the battery with a dry cloth to assure a good contact.
- Do not hold the battery with metallic tweezers, otherwise a short-circuit may occur.
- Note that the lithium battery has a positive (+) and a negative (–) terminals as illustrated. **Be sure to install the lithium battery so that terminals on the battery match the terminals on the camcorder.**

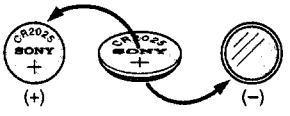

WARNING

The battery may explode if mistreated. Do not recharge, disassemble, or dispose of in fire.

Changing the lithium battery in the camcorder

Changing the lithium battery

When replacing the lithium battery, keep the battery pack or other power source attached. Otherwise, you will need to reset the date, time and other items in the menu system retained by the lithium battery.

(1) Open the LCD panel and open the lid of the lithium battery compartment.
(2) Push the lithium battery down once and pull it out from the holder.
(3) Install the lithium battery with the positive (+) side facing out. Close the lid.

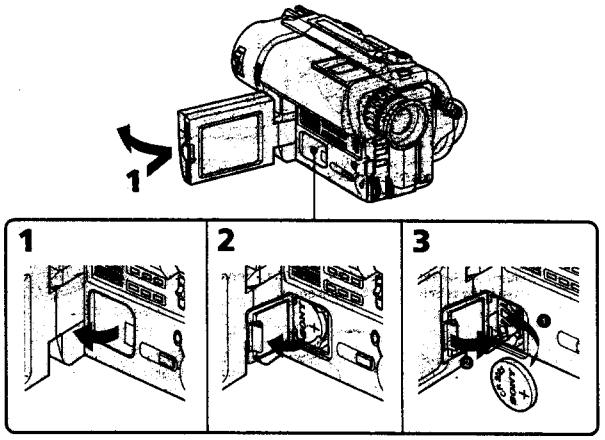

Resetting the date and time

You can reset the date and time in the menu system.

(1) While the camcorder is in Standby mode, press MENU to display the menu.
(2) Turn the control dial to select 🧰, then press the dial.
(3) Turn the control dial to select CLOCK SET, then press the dial.
(4) Turn the control dial to adjust the desired year, then press the dial.
(5) Set the month, day, hour and minute by turning the control dial and pressing the dial.
(6) Press MENU to erase the menu display.

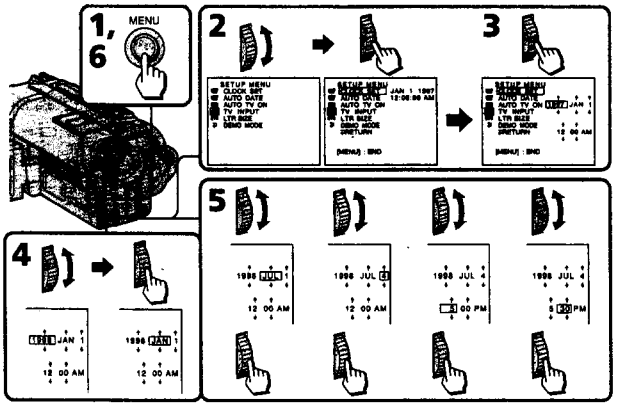

To correct the date and time setting

Repeat the above procedure.

To check the preset date and time

Press DATE to display the date indicator.
Press TIME to display the time indicator.
When you press the same button again, the indicator goes off.

The year changes as follows:

1997 ⟷ 1998 ← ····· → 2029

Note on the time indicator

The internal clock of this camcorder operates on a 12-hour cycle.
• 12:00 AM stands for midnight.
• 12:00 PM stands for noon.

Simple setting of clock by time difference

You can easily set the clock for a local time by a time difference in the menu system.

(1) While the camcorder is the standby mode, press MENU to display the menu.
(2) Turn the control dial to select **ETC**, then press the dial.
(3) Turn the control dial to select WORLD TIME, then press the dial.
(4) Turn the control dial to set a time difference, and press the dial. The hour of clock changes in relation to a time difference which you set.
(5) Press MENU to erase the menu display.

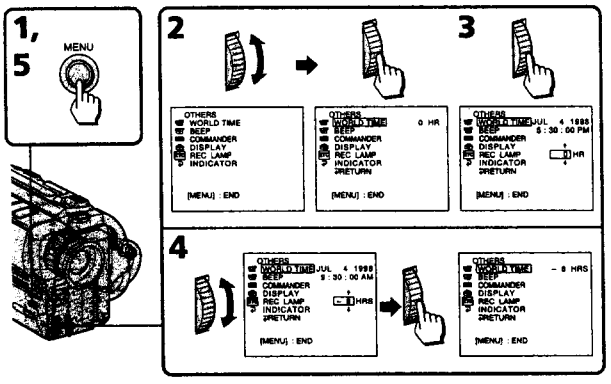

Note on WORLD TIME

If the time is not set, WORLD TIME does not work.

Usable cassettes and playback modes

Selecting cassette tapes

– CCD-TRV65/TRV615 only

This Hi8 system is an extension of the standard 8 mm system, and was developed to realize higher picture quality.
You can use either Hi8 or standard 8 mm video cassette for this camera. When you use a Hi8 video cassette, the recording is made in the Hi8 system. When you use a standard 8 mm video cassette, the recording is made in the standard 8 mm system. Standard 8 mm video cassette is incapable of recording in the Hi8 system.
If you intend to use a standard 8 mm video recorder/player to play back a video tape, you are required to use a standard 8 mm video cassette for recording.

What is video 8 XR/video Hi8 XR

"XR", that is an abbreviation of "Extended Resolution", represents the new type of 8 mm camcorder that has the property to realize more quality picture compared with the conventional camcorders including the Hi8 models. You can record and play back pictures more clearly in detail with the "XR" camcorder.
Video tape recorded by a camcorder having the "XR" function shows excellent picture quality at maximum when it is played back by the "XR" camcorder.
When video tape recorded by this "XR" camcorder is played back by a conventional 8/Hi8 camcorder or when video tape recorded by a conventional 8/Hi8 camcorder is played back by this "XR" camcorder, the playback picture quality is in the normal quality of the 8/Hi8 camcorder.

When you play back

The playback mode (SP/LP) and system (Hi8/standard 8 mm) are selected automatically according to the format in which the tape has been recorded. The quality of the recorded picture in LP mode, however, will not be as good as that in SP mode.

Note on AFM HiFi stereo

– CCD-TRV65/TRV615 only

When you play back a tape, the sound will be in monaural if:
• You record the tape using this camcorder, then play it back on an AFM HiFi monaural video recorder/player.
• You record the tape on an AFM HiFi monaural video recorder, then play it back on this camcorder.

Foreign 8 mm video

Because the TV color systems differ from country to country, you may not be able to play back foreign pre-recorded tapes. Refer to the list of "Using your camcorder abroad" to check the TV color system of foreign countries.

Tips for using the battery pack

This section shows you how you can get the most out of your battery pack.

Preparing the battery pack

Always carry additional batteries
Have sufficient battery pack power to do 2 to 3 times as much recording as you have planned.

Battery life is shorter in a cold environment
Battery efficiency is decreased, and the battery will be used up more quickly, if you are recording in a cold environment.

To save battery power
Turn STANDBY down when not recording to save battery power.
A smooth transition between scenes can be made even if recording is stopped and started again. While you are positioning the subject, selecting an angle, or looking through the viewfinder lens or on the LCD screen, the lens moves automatically and the battery is used. The battery is also used when a tape is inserted or removed.

When to replace the battery pack

While you are using your camcorder, the remaining battery indicator decreases gradually as battery power is used up. Remaining time in minutes appears.

When the remaining battery indicator reaches the lowest point, the ⚭ indicator may appear and start flashing in the viewfinder or on the LCD screen.
When the ⚭ indicator changes from slow flashing to rapid flashing while you are recording, set the POWER switch to OFF on the camcorder and replace the battery pack. Leave the tape in the camcorder to obtain a smooth transition between scenes after the battery pack has been replaced.

About the "InfoLITHIUM" battery pack

What is "InfoLITHIUM"
The "InfoLITHIUM" is a lithium ion battery pack which can exchange data with compatible video equipment about its battery consumption. Sony recommends that you use the "InfoLITHIUM" battery pack with video equipment having the (i) mark.
When you use this battery pack with video equipment having the (i) mark, the video equipment will indicate the remaining battery time in minutes*. However, if you use it with video equipment not having this mark, the remaining battery capacity will not be indicated in minutes.
"InfoLITHIUM" is a trademark of Sony Corporation.
* The indication may not be accurate depending on the condition and environment which the equipment is used under.

How the battery consumption is displayed
The power consumption of the camcorder changes depending on its use, such as how the autofocusing is working.
While checking the condition of the camcorder, the "InfoLITHIUM" battery pack measures the battery consumption and calculates the remaining battery power. If the condition changed drastically, the remaining battery indication may suddenly decrease or increase by more than 2 minutes.
Even if 5 to 10 minutes is indicated as the battery remaining time on the LCD screen or in the viewfinder, the ⚭ indicator may also flash under some condition.

To obtain more accurate remaining battery indication
Set the camcorder to recording standby mode and point towards a stationary object. Do not move the camcorder for 30 seconds or more.
- If the indication seems incorrect, recharge the battery pack fully (Full charge[1]). Note that if you have used the battery in a hot or cold environment for long time, or you have repeated charging many times, the battery pack may not be able to show the correct time even after being fully charged.
- After you have used the "InfoLITHIUM" battery pack with an equipment not having the (i) mark, make sure that you use up the battery pack on the equipment having the (i) mark and then recharge fully.

Why the remaining battery indication does not match the continuous recording time in the operating instructions
The recording time is affected by the environmental temperature and conditions. The recording time becomes very short in a cold environment. The continuous recording time in the operating instructions is measured under the condition of using a fully charged (or normal charged) battery pack in 77°F (25°C). As the environmental temperature and condition are different when you actually use the camcorder, the remaining battery time is not same as the continuous recording time in the operating instructions.

[1] Full charge: Charging until FULL appears in the display window.

Precautions

Caution
Never leave the battery pack in temperatures above 140°F (60°C), such as in a car parked in the sun or under direct sunlight.

The battery pack heats up
During charging or recording, the battery pack heats up. This is caused by energy that has been generated and a chemical change that has occurred inside the battery pack. This is not cause for concern and is normal.

Be sure to observe the following
- Keep the battery pack away from fire.
- Keep the battery pack dry.
- Do not open nor try to disassemble the battery pack.
- Do not expose the battery pack to any mechanical shock.

The life of the battery pack
If the battery indicator flashes rapidly just after turning on the camcorder with a fully charged battery pack, the battery pack should be replaced with a new fully charged one.

Charging temperature
You should charge batteries at temperatures from 50°F to 86°F (from 10°C to 30°C). Lower temperatures require a longer charging time.

Precautions

– CCD-TRV15/TRV25/TRV35/TRV65 only
- **Use only with alkaline batteries. You cannot use the battery case with manganese batteries or size AA (LR6) rechargeable NiCd batteries.**
- **Using with Sony alkaline batteries is preferable.**
- Battery life is remarkably shorter in a cold environment (lower than 50°F/10°C).
- Keep the metal part clean. If it gets dirty, wipe it with a soft cloth.
- Do not disassemble or convert the battery case.
- Do not expose the battery case to any mechanical shock.
- During recording, the battery case heats up. This is not cause for concern.
- Prevent the electrode in the battery case from coming in contact with a metal object.
- If you will not use the battery case for a long time, detach the battery case from the camcorder and remove the batteries from the battery case.

Moisture condensation

If the camcorder is brought directly from a cold place to a warm place, moisture may condense inside the camcorder, on the surface of the tape, or on the lens. In this condition, the tape may stick to the head drum and be damaged or the unit may not operate correctly. To prevent possible damage under these circumstances, the camcorder is furnished with moisture sensors. Please, take the following precautions.

Inside the camcorder
If there is moisture inside the camcorder, the beep sounds and the ⚿ indicator flashes. If this happens, none of the functions except cassette ejection will work. Open the cassette compartment, turn off the camcorder, and leave it about 1 hour. When ⏏ indicator flashes at the same time, the cassette is inserted in the camcorder. Eject the cassette, turn off the camcorder, and leave also the cassette about 1 hour. The camcorder can be used again if the ⚿ indicator does not appear when the power is turned on again.

On the lens
If moisture condenses on the lens, no indicator appears, but the picture becomes dim. Turn off the power and do not use the camcorder for about 1 hour.

How to prevent moisture condensation
When bringing the camcorder from a cold place to a warm place, put the camcorder in a plastic bag and allow it to adapt to room conditions over a period of time.
(1) Be sure to tightly seal the plastic bag containing the camcorder.
(2) Remove the bag when the air temperature inside it has reached the temperature surrounding it (after about 1 hour).

Video head cleaning

To ensure normal recording and clear pictures, clean the video heads. When the ⊗ indicator and "🎥 CLEANING CASSETTE" message appear one after another or playback pictures are "noisy" or hardly visible, the video heads may be dirty.

[a] → [b]

[a] Slightly dirty
[b] Very dirty

If this happens, clean the video heads with the Sony V8-25CLH / V8-25CLD cleaning cassette (not supplied). After checking the picture, if it is still "noisy," repeat the cleaning. (Do not repeat cleaning more than 5 times in one session.)

Caution

Do not use a commercially available wet-type cleaning cassette. It may damage the video heads.

Note

If the Sony V8-25CLH / V8-25CLD cleaning cassette is not available in your area, consult your nearest Sony dealer.

Removing dust from inside the viewfinder

(1) Remove the screw with a screwdriver (not supplied). Then, while sliding the RELEASE knob, turn the eyecup in the direction of the arrow and pull it out.
(2) Clean the surface with a commercially available blower.

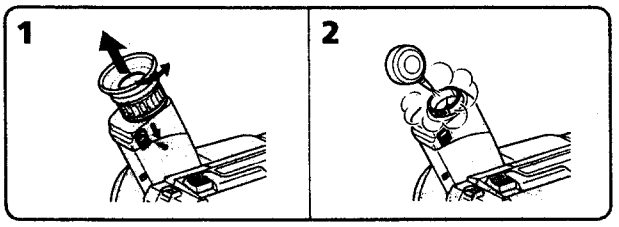

To reattach the eyecup

(1) Align the groove on the eyecup with the • mark on the barrel.
(2) Turn the eyecup in the direction of the arrow. Then replace the screw.

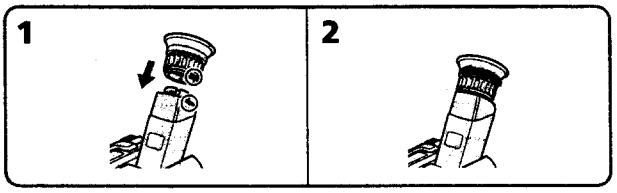

Caution

Do not remove any other screws. You may remove only the screw to remove the eyecup.

Precautions

Camcorder operation

- Operate the camcorder on 7.2 V (battery pack) or 8.4 V (AC power adaptor).
- For DC or AC operation, use the accessories recommended in this manual.
- Should any solid object or liquid get inside the casing, unplug the camcorder and have it checked by a Sony dealer before operating it any further.
- Avoid rough handling or mechanical shock. Be particularly careful of the lens.
- Keep the POWER switch setting to OFF when not using the camcorder.
- Do not wrap up the camcorder and operate it since heat may build up internally.
- Keep the camcorder away from strong magnetic fields or mechanical vibration.
- Do not push the LCD screen.
- If the camcorder is used in a cold place, a residual image may appear on the LCD screen. This is not a malfunction.
- While using the camcorder, the back of the LCD screen may heat up. This is not a malfunction.

On handling tapes

Do not insert anything in the small holes on the rear of the cassette. These holes are used to sense the type of tape, thickness of tape and if the recording tab is in or out.

Camcorder care

- When the camcorder is not to be used for a long time, remove the tape. Periodically turn on the power, operate the camera and player sections and play back a tape for about 3 minutes.
- If fingerprints or debris make the LCD screen dirty, we recommend using a LCD Cleaning Kit (not supplied) to clean the LCD screen.
- Clean the lens with a soft brush to remove dust. If there are fingerprints on it, remove them with a soft cloth.
- Clean the camcorder body with a dry soft cloth, or a soft cloth lightly moistened with a mild detergent solution. Do not use any type of solvent which may damage the finish.
- Do not let sand get into the camcorder. When you use the camcorder on a sandy beach or in a dusty place, protect it from the sand or dust. Sand or dust may cause the unit to malfunction, and sometimes this malfunction cannot be repaired.

AC power adaptor

- Unplug the unit from the wall outlet when not in use for a long time. To disconnect the power cord, pull it out by the plug. Never pull the power cord itself.
- Do not operate the unit with a damaged cord or if the unit has been dropped or damaged.
- Do not bend the power cord forcibly, or put a heavy object on it. This will damage the cord and may cause a fire or electrical shock.
- Be sure that nothing metallic comes into contact with the metal parts of the connecting plate. If this happens, a short may occur and the unit may be damaged.
- Always keep the metal contacts clean.
- Do not disassemble the unit.
- Do not apply mechanical shock or drop the unit.
- While the unit is in use, particularly during charging, keep it away from AM receivers and video equipment because it will disturb AM reception and video operation.
- The unit becomes warm while in use. This is normal.
- Do not place the unit in locations that are:
  - Extremely hot or cold
  - Dusty or dirty
  - Very humid
  - Vibrating

Notes on dry batteries

To avoid possible damage from battery leakage or corrosion, observe the following.

- Be sure to insert the batteries in the correct direction.
- Dry batteries are not rechargeable.
- Do not use a combination of new and old batteries.
- Do not use different types of batteries.
- The batteries slowly discharge while not in use.
- Do not use a battery that is leaking.

If battery leakage occurred

- Wipe off the liquid in the battery case carefully before replacing the batteries.
- If you touch the liquid, wash it off with water.
- If the liquid get into your eyes, wash your eyes with a lot of water and then consult a doctor.

If any difficulty should arise, unplug the unit and contact your nearest Sony dealer.

Using your camcorder abroad

Each country or area has its own electric and TV color systems. Before using your camcorder abroad, check the following points.

Power sources

You can use your camcorder in any country or area with the supplied AC power adaptor within 100 V to 240 V AC, 50/60 Hz.
Use a commercially available AC plug adaptor **[a]**, if necessary, depending on the degign of the wall outlet **[b]**.

Difference in color systems

This camcorder is an NTSC system based camcorder. If you want to view the playback picture on a TV, it must be an NTSC system based TV.
Check the following list.

NTSC system
Bahama Islands, Bolivia, Canada, Central America, Chile, Colombia, Ecuador, Jamaica, Japan, Korea, Mexico, Peru, Surinam, Taiwan, the Philippines, the U.S.A., Venezuela, etc.

PAL system
Australia, Austria, Belgium, China, Czech Republic, Denmark, Finland, Germany, Great Britain, Holland, Hong Kong, Italy, Kuwait, Malaysia, New Zealand, Norway, Portugal, Singapore, Slovak Republic, Spain, Sweden, Switzerland, Thailand, etc.

PAL-M system
Brazil

PAL-N system
Argentina, Paraguay, Uruguay

SECAM system
Bulgaria, France, Guyana, Hungary, Iran, Iraq, Monaco, Poland, Russia, Ukraine, etc.

Self-diagnosis display

The camcorder has a self-diagnosis display.
This function displays the camcorder's condition with five digits (a combination of a letter and figures) in the viewfinder or on the LCD screen. If this occurs, check the following code chart. The five-digit display informs you of the camcorder's current condition. The last two digits (indicated by □□) will differ depending on the state of the camcorder.

LCD screen

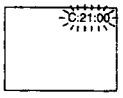

Self-diagnosis display
- C:□□:□□
  You can service the camcorder yourself.
- E:□□:□□
  Contact your Sony dealer or local autorized Sony facilitiy.

Five-digit display	Cause and/or Corrective Actions
C:21:□□	• Moisture condensation has occurred. → Remove the cassette and leave the camcorder for at least 1 hour. (p. 67)
C:22:□□	• The video heads are dirty. → Clean the heads using the Sony V8-25CLH/V8-25CLD cleaning cassette (not supplied). (p. 68)
C:23:□□	• You are using a battery pack that is not an "InfoLITHIUM" battery pack. → Use an "InfoLITHIUM" battery pack. (p. 66)
C:31:□□ C:32:□□	• A servicable situation not malfunctioned above has occurred. → Remove the cassette and insert it again, then operate the camcorder. → Disconnect the power cord of the AC power adaptor or remove the battery pack. After reconnecting the power source, operate the camcorder.
E:61:□□ E:62:□□	• A camcorder malfunction which you cannot service has occurred. → Contact your Sony dealer or local authorized Sony service facility and inform them of the five digits. (example: E:61:10)

If you are unable to resolve the problem, contact your Sony dealer or local authorized Sony service facility.

Identifying the parts

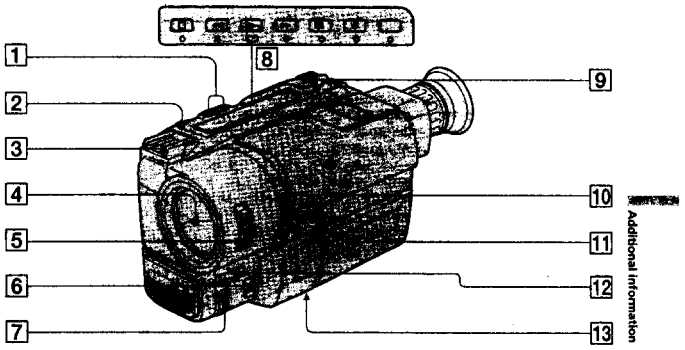

1 **EDITSEARCH button** (p. 21)
2 **LASER LINK button** (CCD-TRV35/TRV65/TRV615 only) (p. 56)
3 **Intelligent accessory shoe** (CCD-TRV65/TRV615 only) (p. 80) / **Accessory shoe** (CCD-TRV35 only)
4 **Lens cover**
5 **POWER switch** (p. 13)
6 **FOCUS switch** (CCD-TRV35/TRV65/TRV615 only) (p. 43)
7 **NEAR/FAR dial** (CCD-TRV35/TRV65/TRV615 only) (p. 43)
8 **Video control buttons** (p. 22)
- ■ STOP (stop)
- ◄◄ REW (rewind)
- ► PLAY (playback)
- ►► FF (fastforward)
- ❚❚ PAUSE (pause)
- ● REC (recording) (CCD-TRV65/TRV615 only)

9 **Power zoom lever** (p. 15)
10 **NIGHTSHOT switch** (CCD-TRV35/TRV65/TRV615 only) (p. 37)
11 **Display window** (p. 86)
12 **FADER button** (CCD-TRV35/TRV65/TRV615 only) (p. 36)
13 **Tripod receptacle** (p. 20)
Make sure that the length of the tripod screw is less than 9/32 inch (6.5 mm) otherwise, you cannot attach the tripod securely and the screw may damage the camcorder.

Identifying the parts

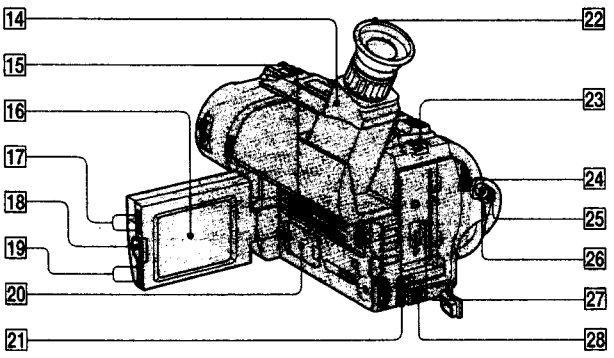

14 **Viewfinder** (p. 14)
15 **Speaker** (p. 23)
16 **LCD screen** (p. 17)
17 **LCD BRIGHT buttons** (p. 17)
18 **OPEN button** (p. 16)
19 **VOLUME buttons** (p. 22)
20 **Lithium battery compartment** (p. 60)
21 **Hook for shoulder strap** (p. 85)
22 **Eyecup**
23 **BATT RELEASE lever** (p. 7, 11)
24 **Hook for shoulder strap** (p. 85)
25 **STANDBY switch** (p. 13)
26 **START/STOP button** (p. 13)
27 **Battery mounting surface**
28 **DC IN jack** (p. 8, 26)

Note on the intelligent accessory shoe
–CCD-TRV65/TRV615 only
Supplies power to optional accessories such as a video light or microphone. The intelligent accessory shoe is linked to the STANDBY switch, allowing you to turn on and off the power supplied by the shoe. Refer to the instruction manual of the accessory for further information. To connect an accessory, press down and push it to the end, and then tighten the screw. To remove an accessory, loosen the screw, and then press down and pull out the accessory.
If the camcorder does not work correctly with using the AC power adaptor, use the battery pack.

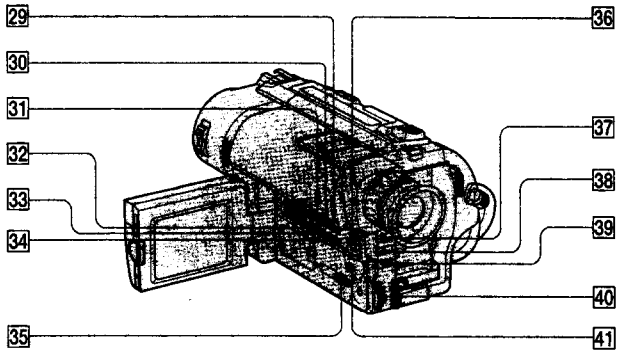

29 **COUNTER RESET button** (p. 14)
30 **TIME button** (p. 51)
31 **DATE button** (p. 51)
32 **DISPLAY button** (p. 23)
33 **TITLE button** (p. 48)
34 **END SEARCH button** (p. 25)
35 **PICTURE EFFECT button** (p. 45)
36 **START/STOP MODE switch** (p. 16)
37 **BACK LIGHT button** (p. 34)
38 **PROGRAM AE button** (p. 41)
39 **EXPOSURE button** (CCD-TRV35/ TRV65/ TRV615 only) (p. 46)
40 **Control dial** (p. 29)
41 **MENU button** (p. 29)

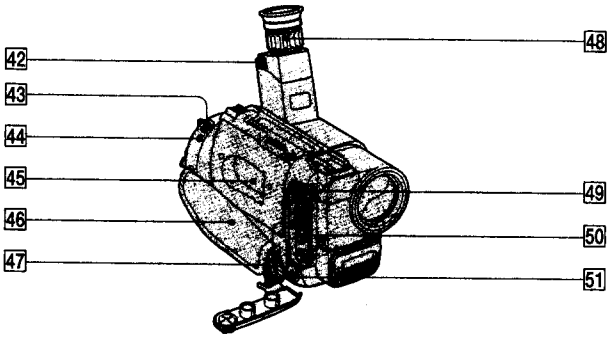

42 **Eyecup RELEASE knob** (p. 69)
43 **EJECT switch** (p. 12)
44 **LANC control jack**
stands for Local Application Control Bus System. The control jack is used for controlling the tape transport of video equipment and peripherals connected to it. This jack has the same function as the jack indicated as CONTROL L or REMOTE.
45 **Cassette compartment** (p. 12)
46 **Grip strap** (p. 19)
47 **RFU DC OUT (RFU adaptor DC output) jack** (p. 55)
48 **Viewfinder lens adjustment ring** (p. 14)
49 **S VIDEO jack** (CCD-TRV65/TRV615 only) (p. 55)
50 **VIDEO/AUDIO jacks** (p. 54)
51 **(headphones) jack** (CCD-TRV65/ TRV615 only) (p. 23) **/ (earphone) jack** (CCD-TRV15/TRV25/TRV35/ TRV215 (p. 23)

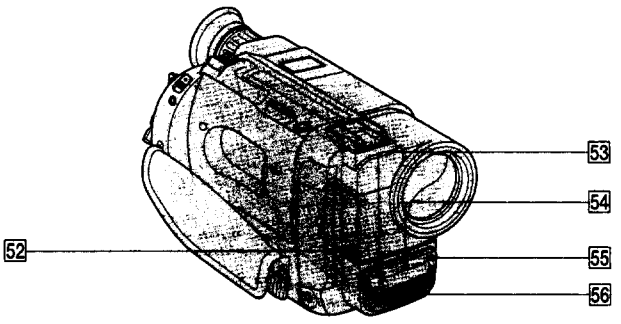

52 **MIC jack (PLUG IN POWER)**
Connect an external microphone (not supplied). This jack also accepts a "plug-in-power" microphone.
53 **Camera recording/battery lamp** (p. 13)
54 **LASER LINK emitter** (CCD-TRV35/ TRV65/ TRV615 only) (p. 56)
55 **Remote sensor** (p. 84)
Aim the Remote Commander here for remote control.
56 **Microphone**

To watch the demonstration

You can start the demonstration by setting DEMO MODE in the menu system.
You can also start the demonstration by the following operation.
When NIGHTSHOT is set to ON, you cannot watch the demonstration (CCD-TRV35/ TRV65/ TRV615 only).

To enter demo mode
(1) Eject the cassette and set the POWER switch to VTR/PLAYER.
(2) Turn STANDBY up to STANDBY.
(3) While holding down ► set the POWER switch to CAMERA.

To exit demo mode
(1) Set the POWER switch to VTR/PLAYER.
(2) Turn STANDBY up to STANDBY.
(3) While holding down ■ set the POWER switch to CAMERA.

Remote Commander

The buttons that have the same name on the Remote Commander as on the camcorder function identically.

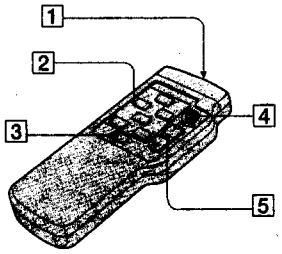

1 **Transmitter**
Point toward the remote sensor to control the camcorder after turning on the camcorder.
2 **Video control buttons** (p. 22)
3 **DISPLAY button** (p. 23)
4 **START/STOP button** (p. 13)
5 **Power zoom button** (p. 15)

Notes on the Remote Commander
- Keep the remote sensor away from strong light sources such as direct sunlight or illumination. Otherwise, the remote control may not be effective.
- Be sure that there is no obstacle between the remote sensor on the camcorder and the Remote Commander.
- This camcorder works in commander mode VTR 2. The commander modes (1, 2 and 3) are used to distinguish this camcorder from other Sony VCRs to avoid remote control misoperation. If you use another Sony VCR in commander mode VTR 2, we recommend you change the commander mode or cover the remote sensor of the VCR with black paper.

To prepare the Remote Commander

Insert two size AA (R6) batteries by matching the + and – on the batteries to the diagram inside the battery compartment.

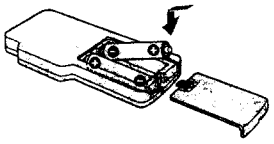

Note on battery life

The batteries for the Remote Commander last about 6 months under normal operation. When the batteries become weak or dead, the Remote Commander does not work.

To avoid damage from possible battery leakage

Remove the batteries when you will not use the Remote Commander for a long time.

Attaching the shoulder strap

Attach the supplied shoulder strap to the hooks for the shoulder strap .

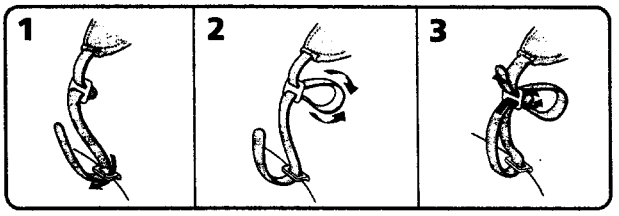

Operation indicators

Viewfinder

Display window

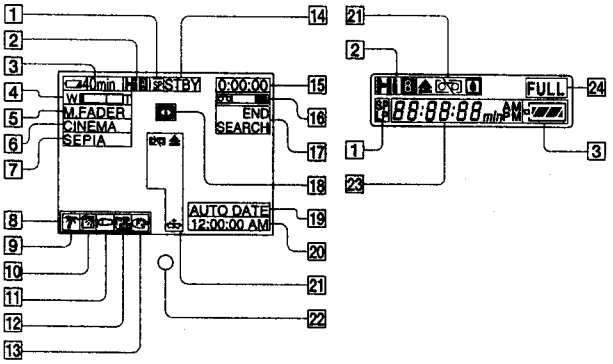

1 **Recording mode indicator** (p. 30)/ **Mirror mode indicator** (p. 18)

2 **Playing back or recording in Hi8 format** (CCD-TRV65/TRV615 only) (p. 63)

3 **Remaining battery time indicator**

4 **Exposure indicator** (CCD-TRV35/ TRV65/ TRV615 only) (p. 46)/ **Zoom indicator** (p. 15)

5 **FADER indicator** (CCD-TRV35/TRV65/ TRV615 only) (p. 36)

6 **Wide mode indicator** (p. 39)

7 **PICTURE EFFECT indicator** (p. 45)

8 **LCD BRIGHT indicator** (p. 17) / **VOLUME indicator** (p. 22)

9 **PROGRAM AE indicator** (p. 40)

10 **Backlight indicator** (p. 34)

11 **WIND indicator** (CCD-TRV65/TRV615 only) (p. 31)

12 **Steady Shot off indicator** (CCD-TRV25/TRV35/TRV65/TRV215/ TRV615 only) (p. 53)

13 **Manual focusing** (CCD-TRV35/ TRV65/TRV615 only) (p. 43)

14 **Video control mode** (p. 13)

15 **Tape counter** (p. 14)/**Self-diagnosis functions indicator** (p. 76)/**5SEC mode indicator** (p. 16)

16 **Remaining tape indicator**

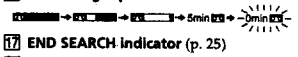

17 **END SEARCH indicator** (p. 25)

18 **NIGHTSHOT indicator** (CCD-TRV35/ TRV65/ TRV615 only) (p. 37)

19 **AUTO DATE indicator** (p. 13)/**Date indicator** (p. 51)

20 **Time indicator** (p. 51)

21 **Warning indicators** (p. 87)

22 **Recording lamp** (p. 13)

23 **Date or time indicator** (p. 51)/**Tape counter indicator** (p. 14)/**Self-diagnosis functions indicator** (p. 76)/**Remaining battery time indicator**

24 **FULL charge indicator** (p. 8)

Warning indicators

If indicators flash in the viewfinder or in the display window, check the following:
♪♪... : you can hear the beep sound when the BEEP is set to ON.

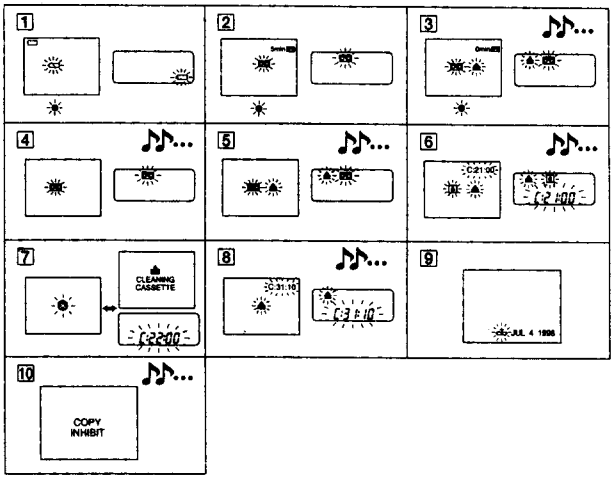

1 **The battery is weak or dead.**
Slow flashing: The battery is weak.
Fast flashing: The battery is dead.

2 **The tape is near the end.**
The flashing is slow.

3 **The tape has run out.**
The flashing becomes rapid.

4 **No tape has been inserted.**

5 **The tab on the tape is out (red).**

6 **Moisture condensation has occurred.**

7 **The video heads may be contaminated.**

8 **Some other trouble has occurred.**
Use the self-diagnosis function (p. 76). If the display does not disappear contact your Sony dealer or local authorized Sony service facility.

9 **The lithium battery is weak or is not installed.**

10 **You tried to record a picture that has a copyright control signal.**
(CCD-TRV65/TRV615 only) (P. 58)

SECTION 2
DISASSEMBLY

The eqipment can be removed using the following procedure.

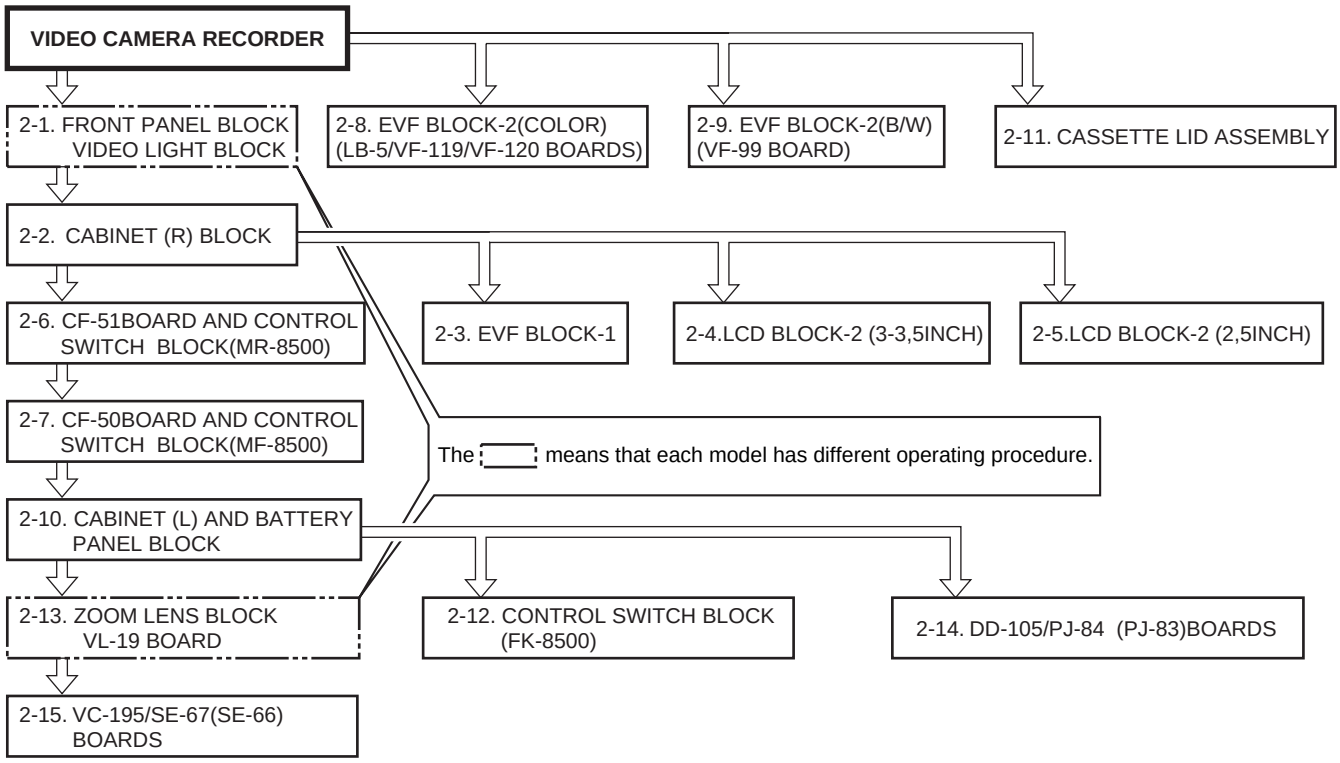

NOTE : Follow the disassembly procedure in the numerical order given.

2-1. REMOVAL OF FRONT PANEL BLOCK AND VIDEO LIGHT BLOCK

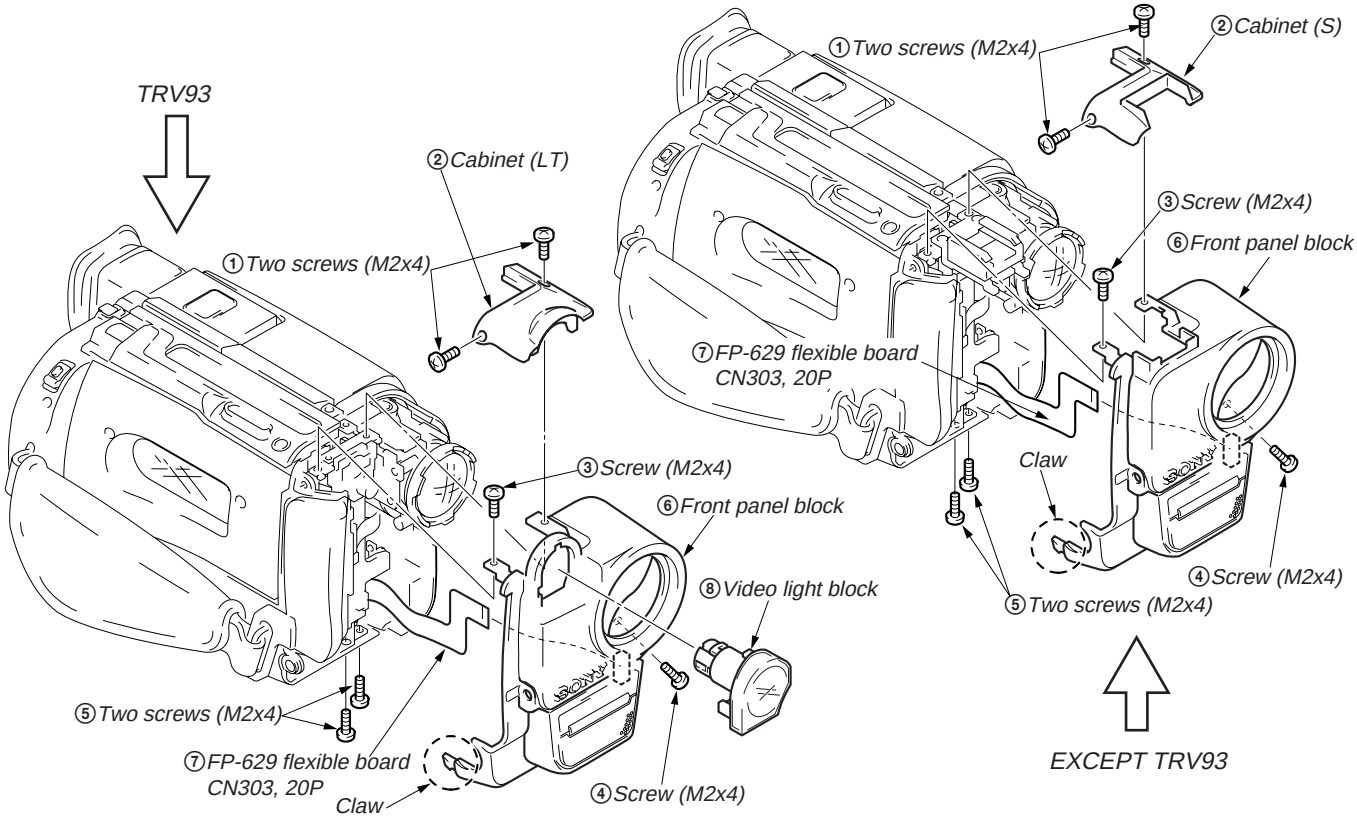

2-2. REMOVAL OF CABINET (R) BLOCK

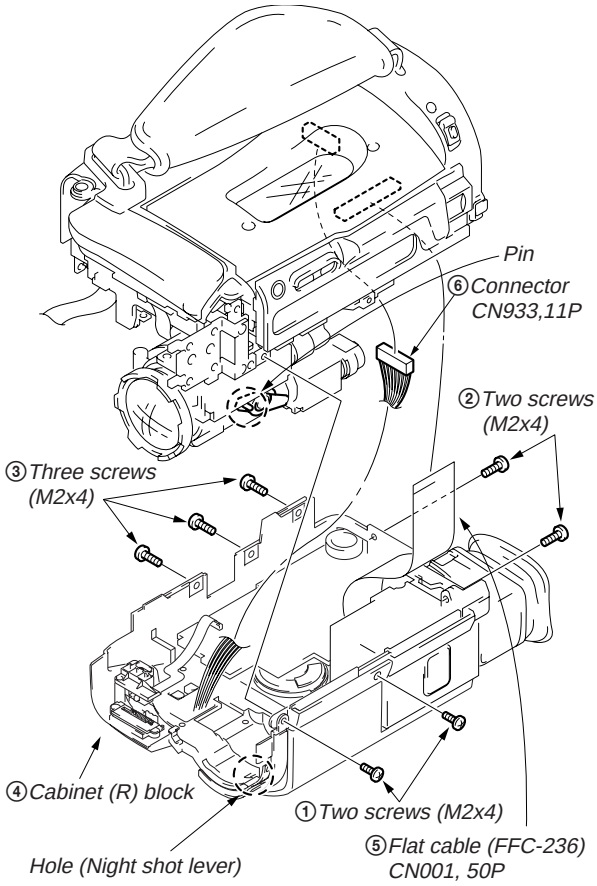

2-3. REMOVAL OF EVF BLOCK

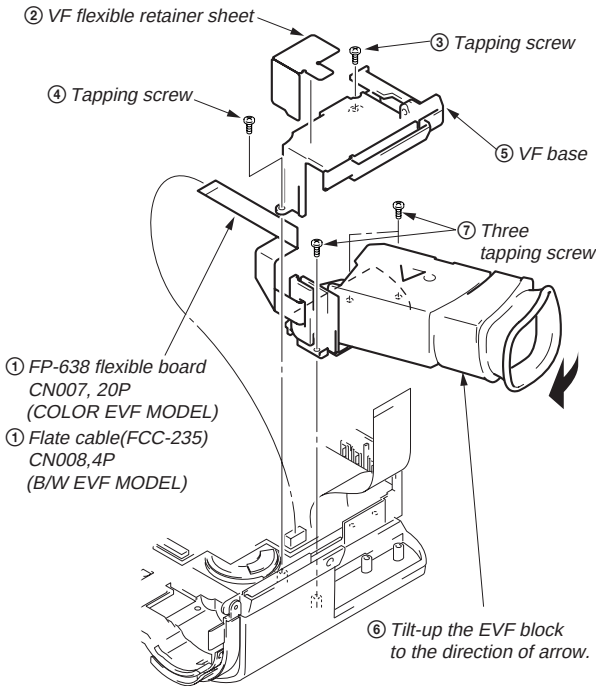
② VF flexible retainer sheet
③ Tapping screw
④ Tapping screw
⑤ VF base
⑦ Three tapping screw
① FP-638 flexible board CN007, 20P (COLOR EVF MODEL)
① Flate cable(FCC-235) CN008,4P (B/W EVF MODEL)
⑥ Tilt-up the EVF block to the direction of arrow.

2-4. REMOVAL OF LCD BLOCK (3/3.5 INCH)

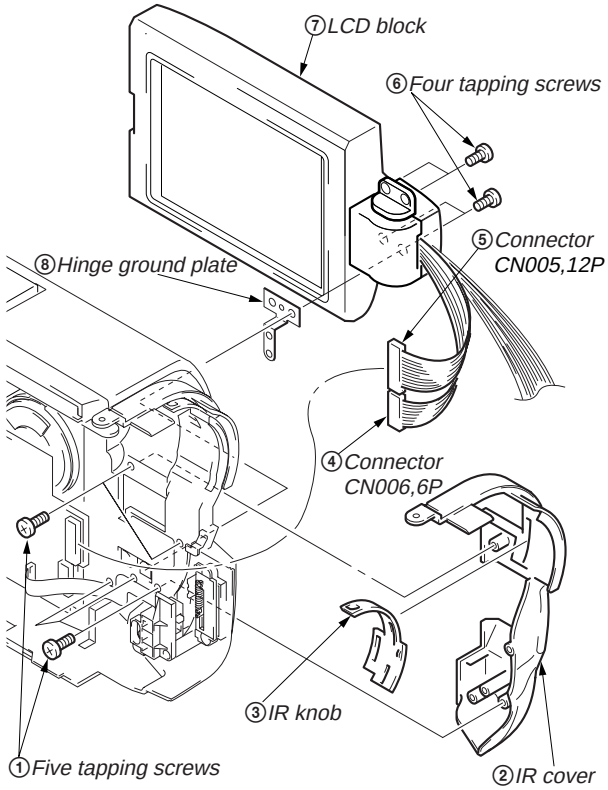

2-5. REMOVAL OF LCD BLOCK (2.5 INCH)

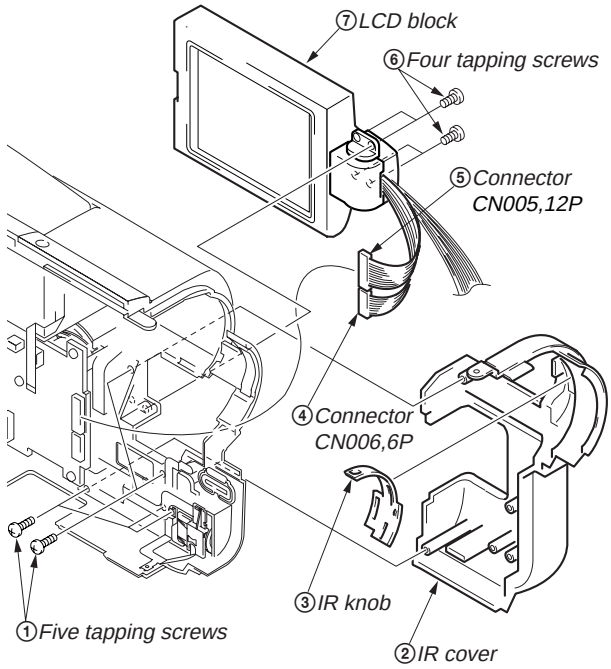

2-6. REMOVAL OF CF-51 BOARD AND CONTOROL SWITCH BLOCK (MR-8500) (COLOR)

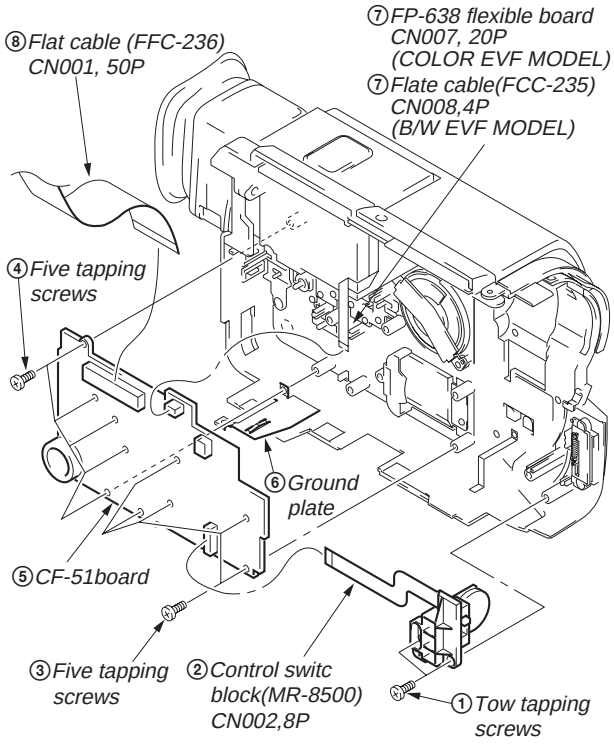

2-7. REMOVAL OF CF-50 BOARD AND CONTOROL SWITCH BLOCK (MF-8500) (B/W)

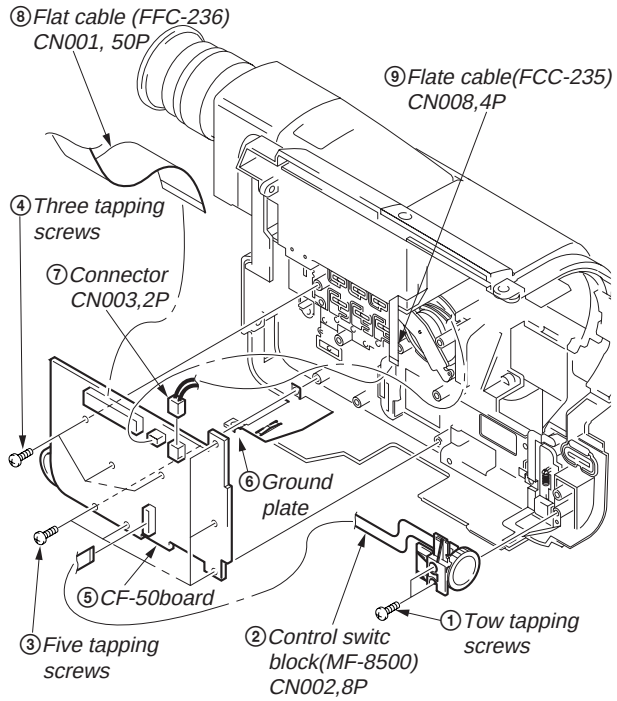

2-8. REMOVAL OF EVF BLOCK-2 (COLOR)

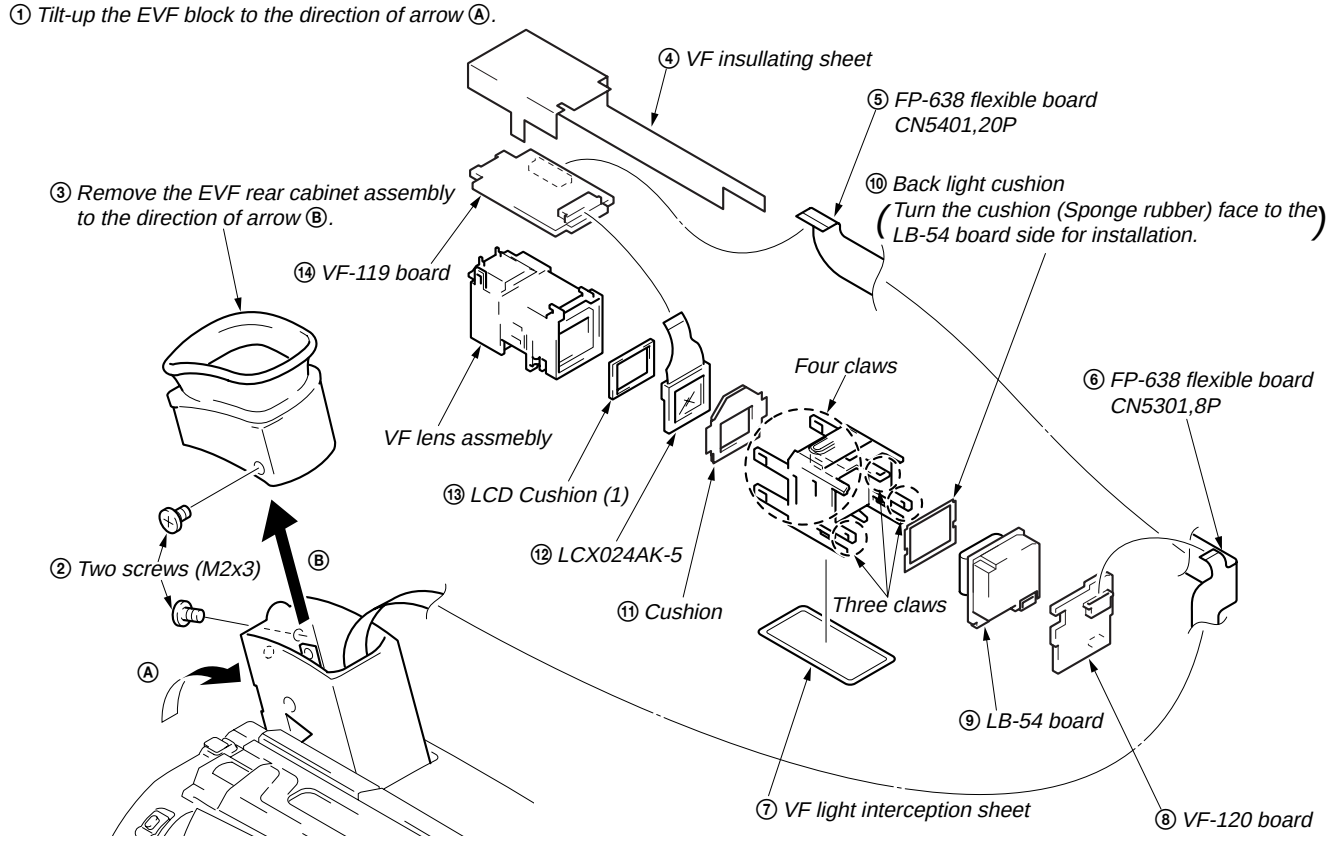
① Tilt-up the EVF block to the direction of arrow Ⓐ.
④ VF insullating sheet
⑤ FP-638 flexible board
CN5401,20P
⑩ Back light cushion
(Turn the cushion (Sponge rubber) face to the LB-54 board side for installation.)
③ Remove the EVF rear cabinet assembly to the direction of arrow Ⓑ.
⑭ VF-119 board
Four claws
⑥ FP-638 flexible board
CN5301,8P
VF lens assmebly
⑬ LCD Cushion (1)
⑫ LCX024AK-5
⑪ Cushion
② Two screws (M2x3)
Ⓑ
Ⓐ
Three claws
⑨ LB-54 board
⑦ VF light interception sheet
⑧ VF-120 board

2-9. REMOVAL OF EVF BLOCK-2 (B/W)

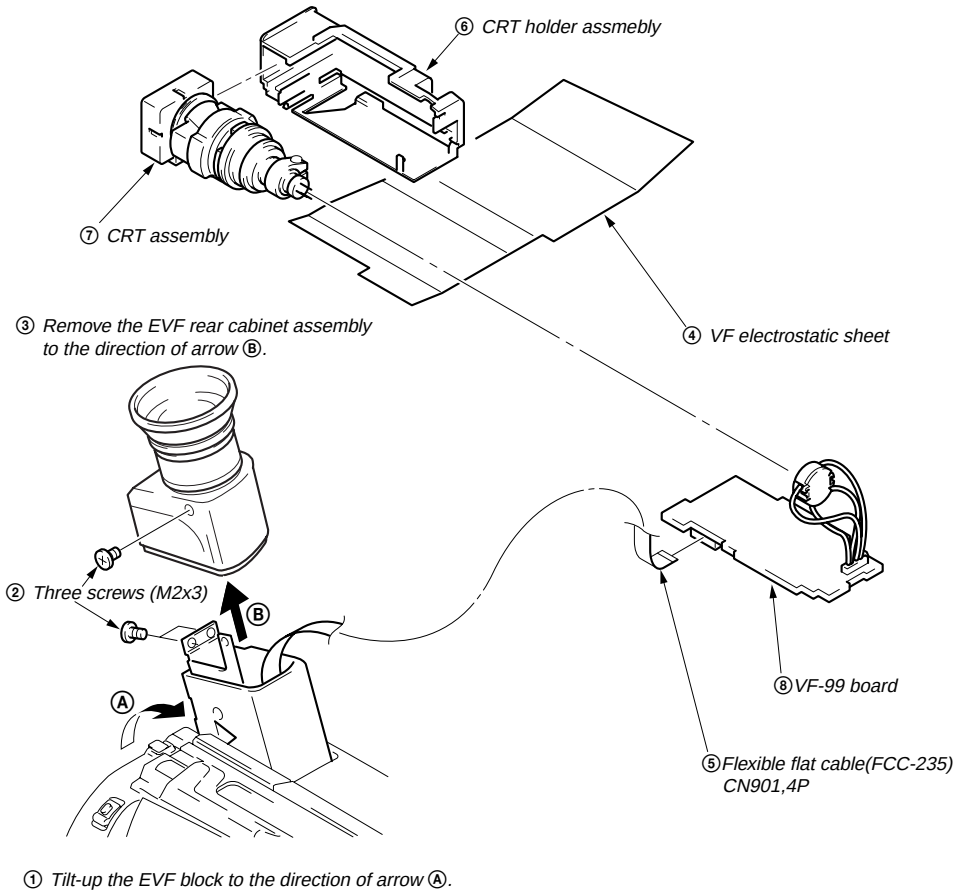
⑥ CRT holder assmebly
⑦ CRT assembly
④ VF electrostatic sheet
③ Remove the EVF rear cabinet assembly to the direction of arrow Ⓑ.
② Three screws (M2x3)
Ⓑ
Ⓐ
⑧ VF-99 board
⑤ Flexible flat cable(FCC-235) CN901,4P
① Tilt-up the EVF block to the direction of arrow Ⓐ.

2-10. REMOVAL OF CABINET (L) BLOCK AND BATTERY PANEL BLOCK

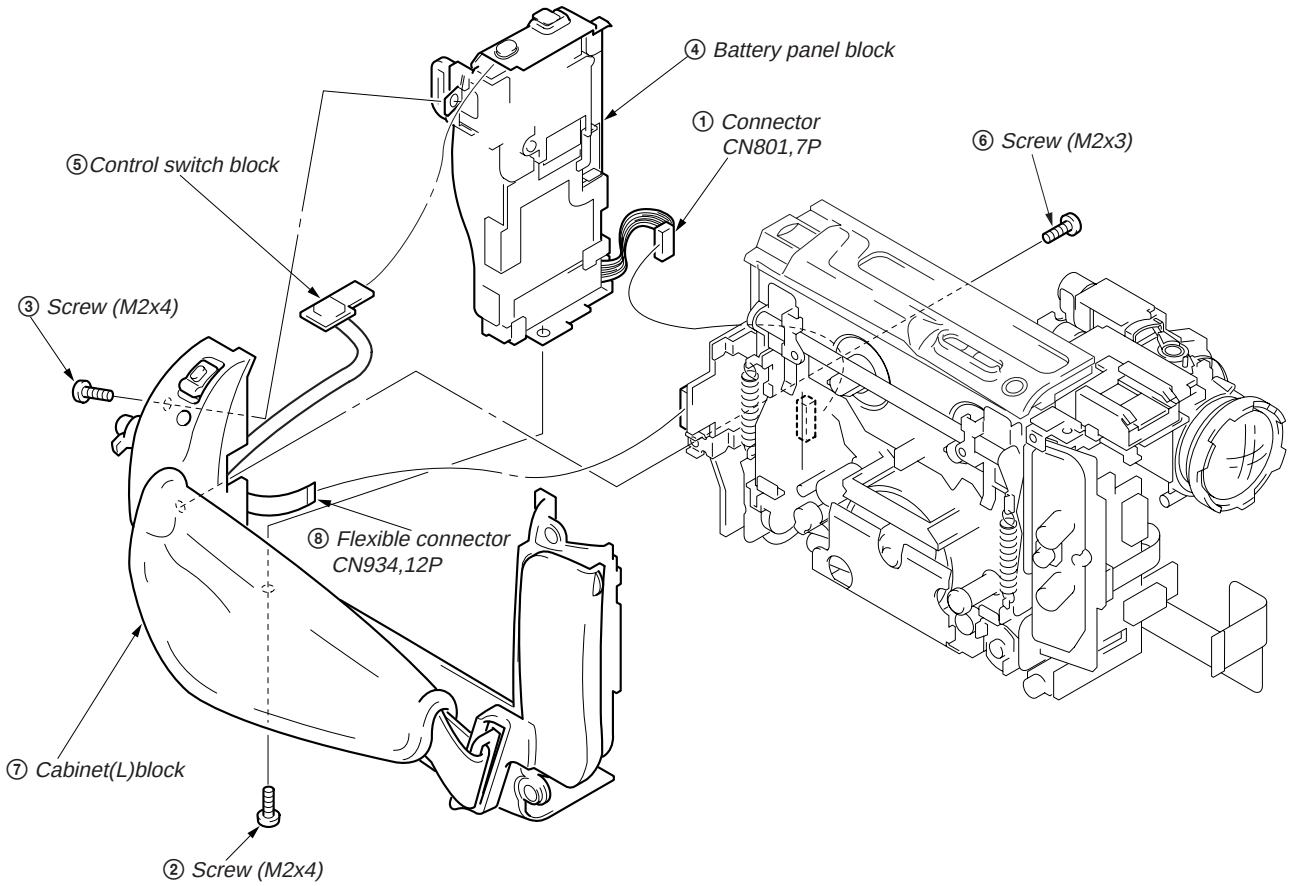

2-11. REMOVAL OF CASSETTE LID ASSEMBLY

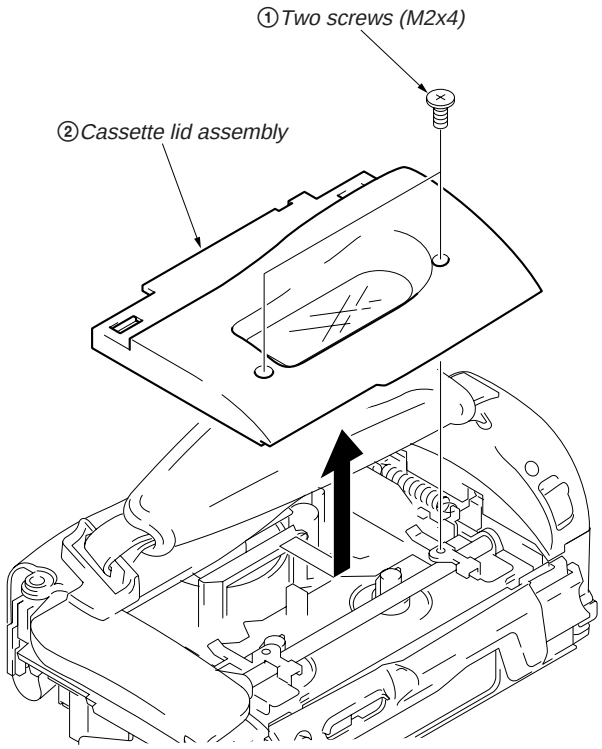

2-12. REMOVAL OF CONTROL SWITCH BLOCK (FK-8500)

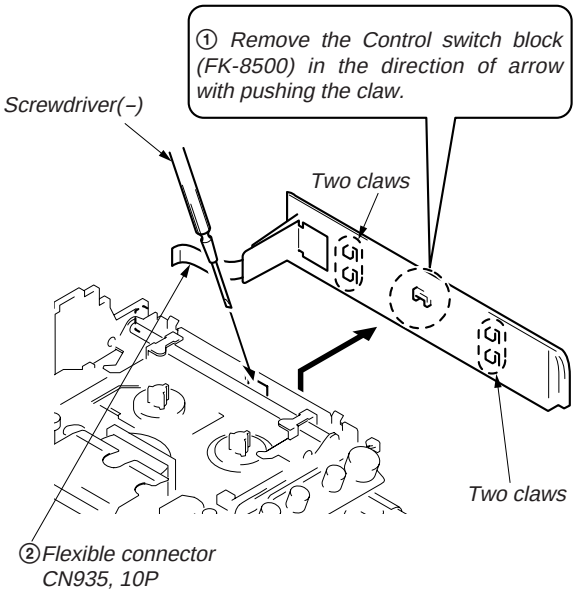
① Remove the Control switch block (FK-8500) in the direction of arrow with pushing the claw.
Screwdriver(–)
Two claws
Two claws
②Flexible connector CN935, 10P

2-13. REMOVAL OF ZOOM LENS BLOCK AND VL-19 BOARD

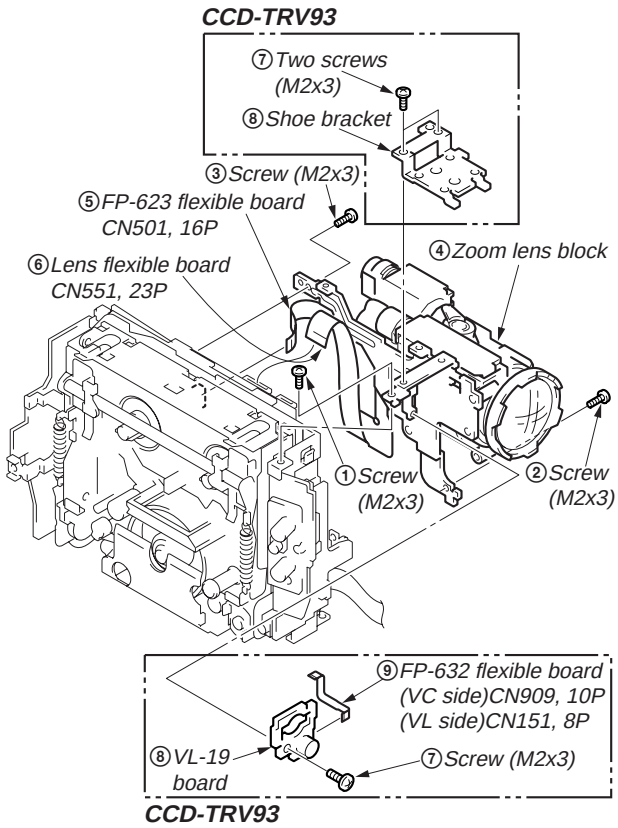

2-14. REMOVAL OF DD-105 BOARD AND PJ-84 (PJ-83) BOARD

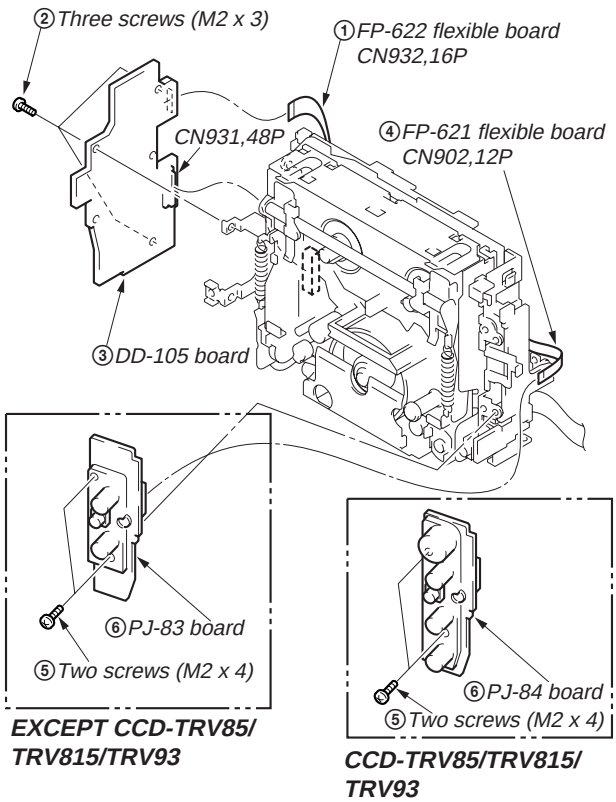

2-15. REMOVAL OF VC-195 AND SE-67 (SE-66) BOARD

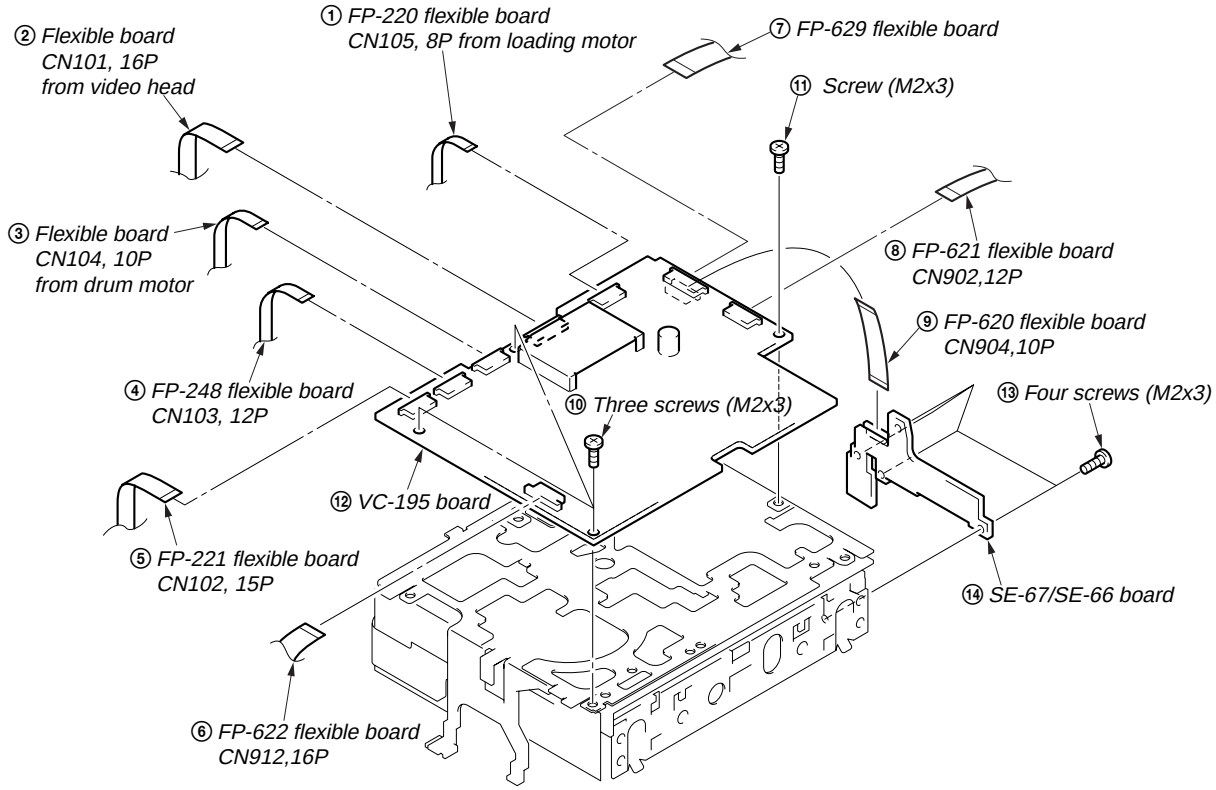

2-16. SERVICE POSITION

PREPARATION; Refer to the previous section “DISASSMBLY”, and connect as shown in the figure after each parts has been removed.

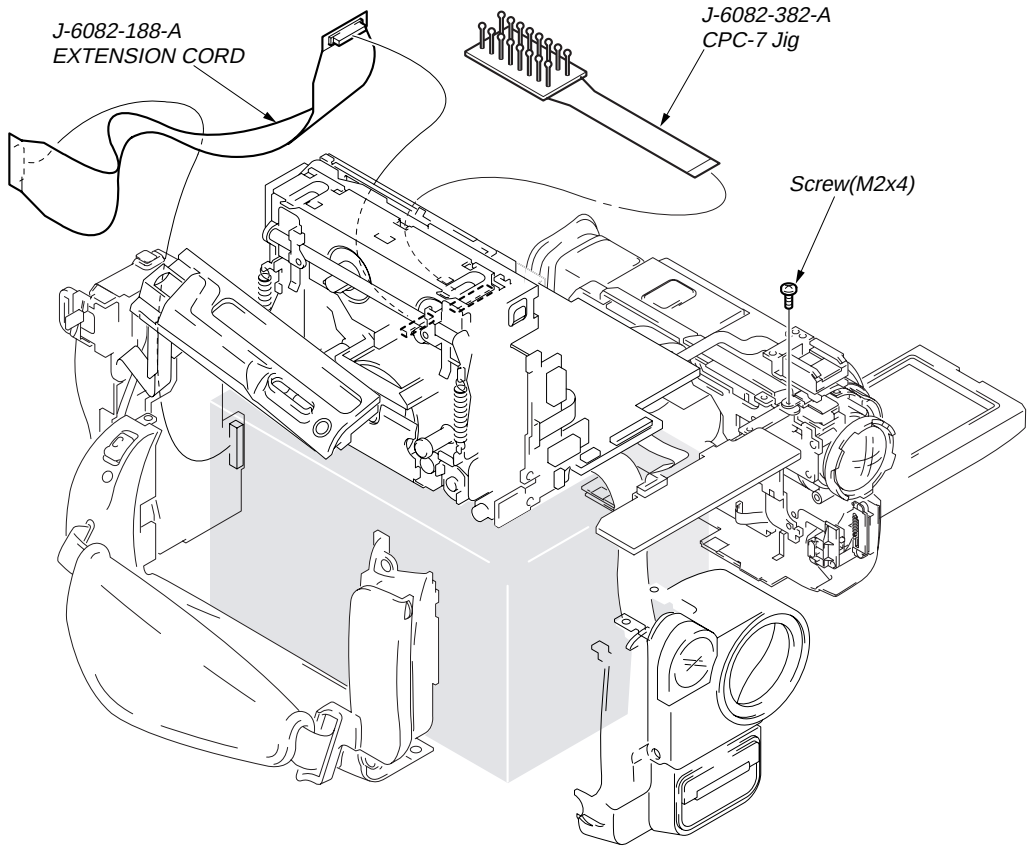

2-17. CIRCUIT BOARDS LOCATION

2.5 INCH LCD MODEL : CCD-TRV15/TRV15E/TRV15EP/
TRV15PK/TRV25/TRV25PK/
TRV35/TRV35E/TRV65/
TRV65PK/TRV215/TRV615
3 INCH LCD MODEL : CCD-TRV93
3.5 INCH LCD MODEL : CCD-TRV85/TRV815

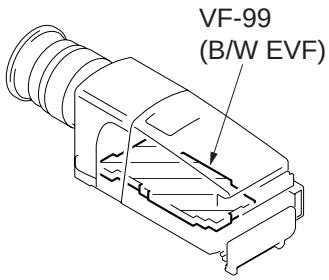

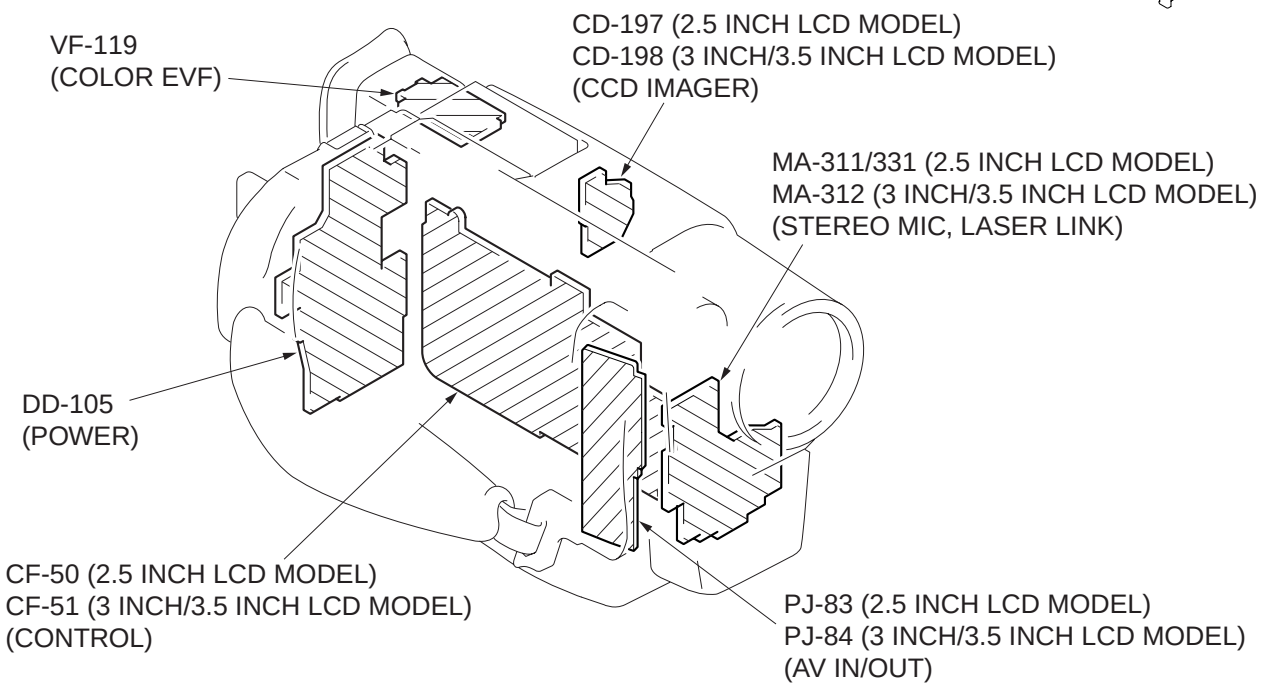

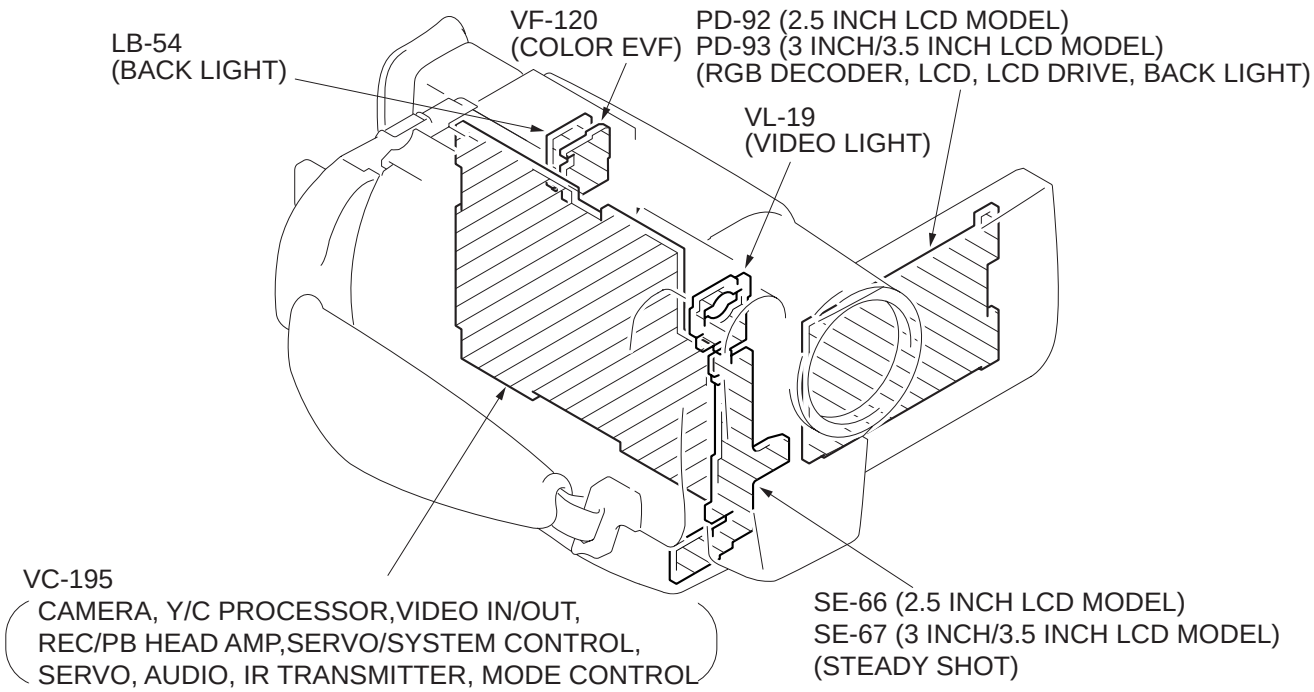

SECTION 3
BLOCK DIAGRAMS

3-1. OVERALL BLOCK DIAGRAM

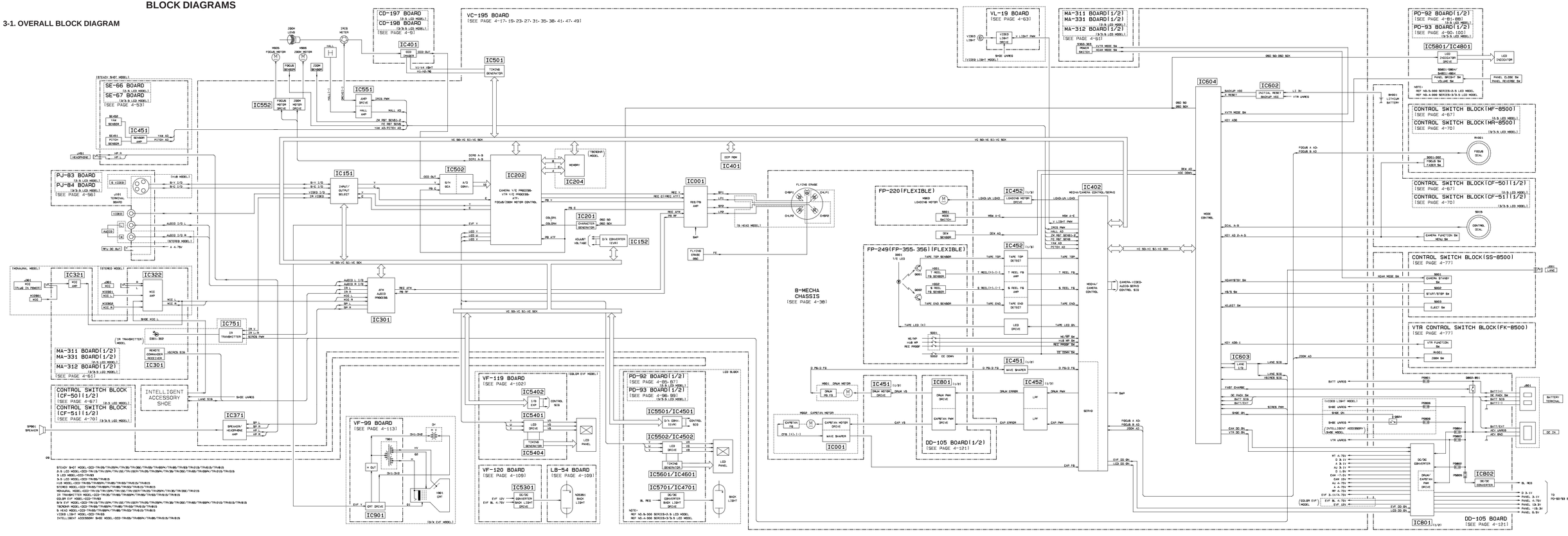
CD-197 BOARD
(3.5 LCD MODEL)
CD-198 BOARD
(3.5/3.5 LCD MODEL)
[SEE PAGE 4-9]
VC-195 BOARD
[SEE PAGE 4-17, 19, 23, 27, 31, 35, 38, 41, 47, 49]
VL-19 BOARD
[SEE PAGE 4-63]
MA-311 BOARD(1/2)
MA-331 BOARD(1/2)
MA-312 BOARD(1/2)
(3.5/3.5 LCD MODEL)
[SEE PAGE 4-61]
PD-92 BOARD(1/2)
[SEE PAGE 4-81, 88]
(3.5 LCD MODEL)
PD-93 BOARD(1/2)
[SEE PAGE 4-90, 100]
(3.5/3.5 LCD MODEL)
IC5801/IC4801
LCD INDICATOR DRIVE
SE-66 BOARD
(3.5 LCD MODEL)
SE-67 BOARD
(3.5/3.5 LCD MODEL)
[SEE PAGE 4-53]
IC451
IC551
IC552
IC501
TIMING GENERATOR
IC401
EEP ROM
IC151
INPUT/ OUTPUT
IC502
IC202
CAMERA/ VTR PROCESS-VTR Y/C PROCESS-ATP, FOCUS/ZOOM MOTOR CONTROL
IC204
MEMORY
(TRACKING MODEL)
IC201
CHARACTER GENERATOR
IC152
D/A CONVERTER (EVR)
IC001
REC/PB AMP
IC301
AFK AUDIO PROCESS
IC321
IC322
MIC AMP
IC751
IR TRANSMITTER
(MONAURAL MODEL)
IC371
SPEAKER/ HEADPHONE AMP
IC1301
REMOTE COMMANDER RECEIVER
IC901
IC902
IC903
IC904
IC905
IC906
IC907
IC908
IC909
IC910
IC911
IC912
IC913
IC914
IC915
IC916
IC917
IC918
IC919
IC920
IC921
IC922
IC923
IC924
IC925
IC926
IC927
IC928
IC929
IC930
IC931
IC932
IC933
IC934
IC935
IC936
IC937
IC938
IC939
IC940

3-2. CAMERA/VIDEO 1 BLOCK DIAGRAM

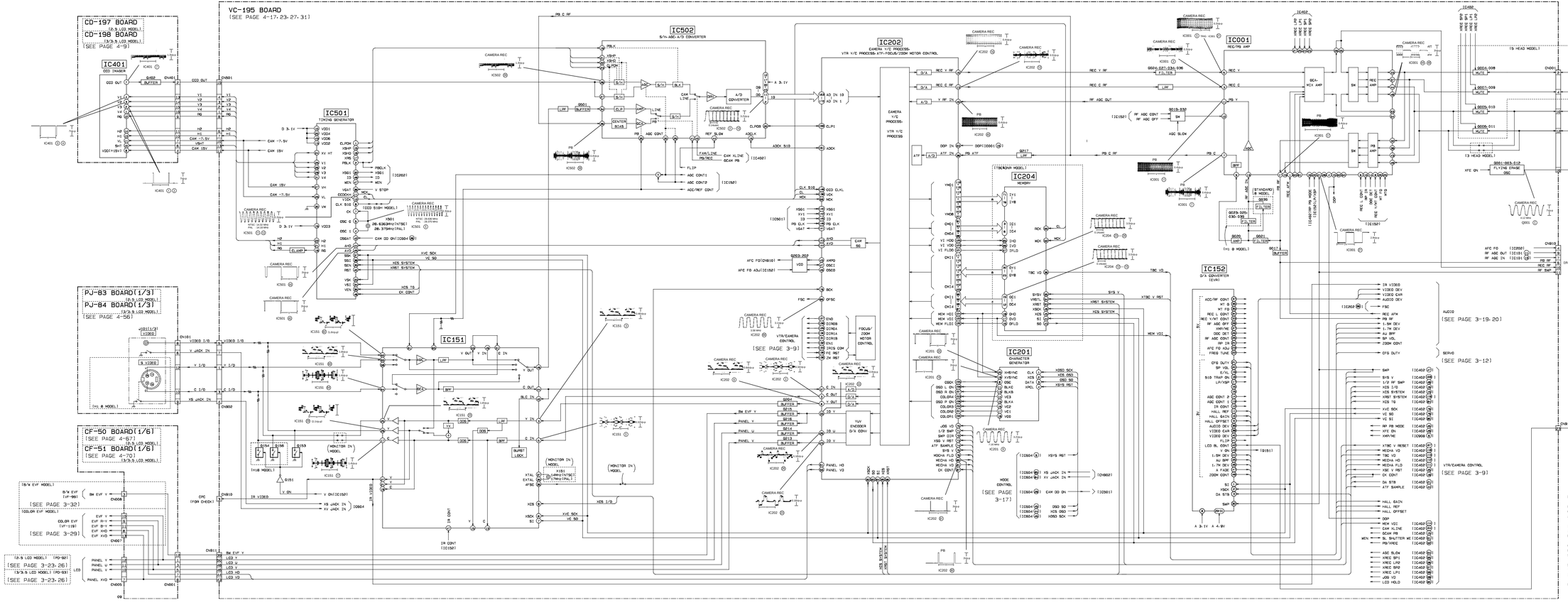

3-3. VTR/CAMEARA CONTROL BLOCK DIAGRAM

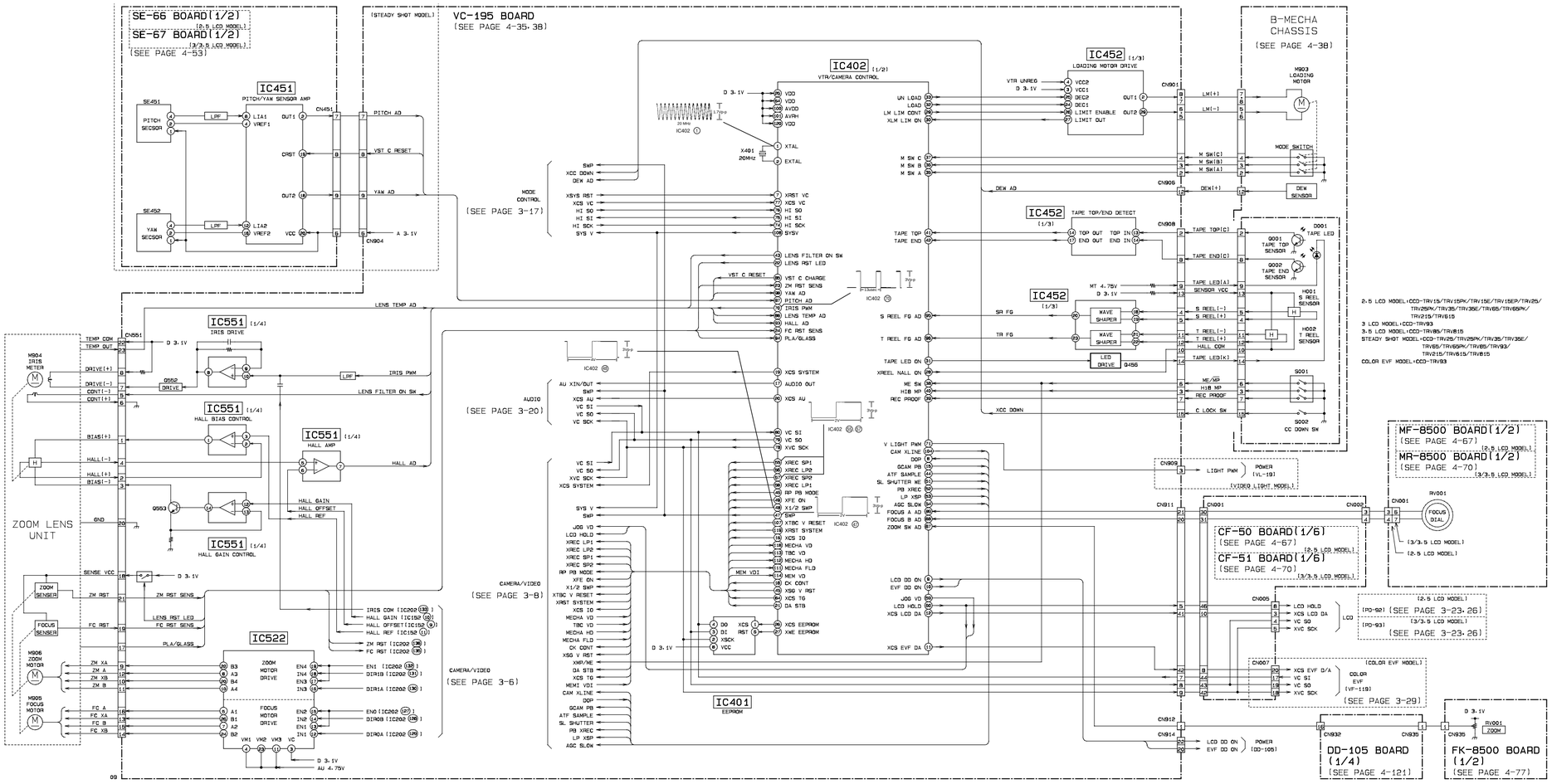

3-4. SERVO BLOCK DIAGRAM

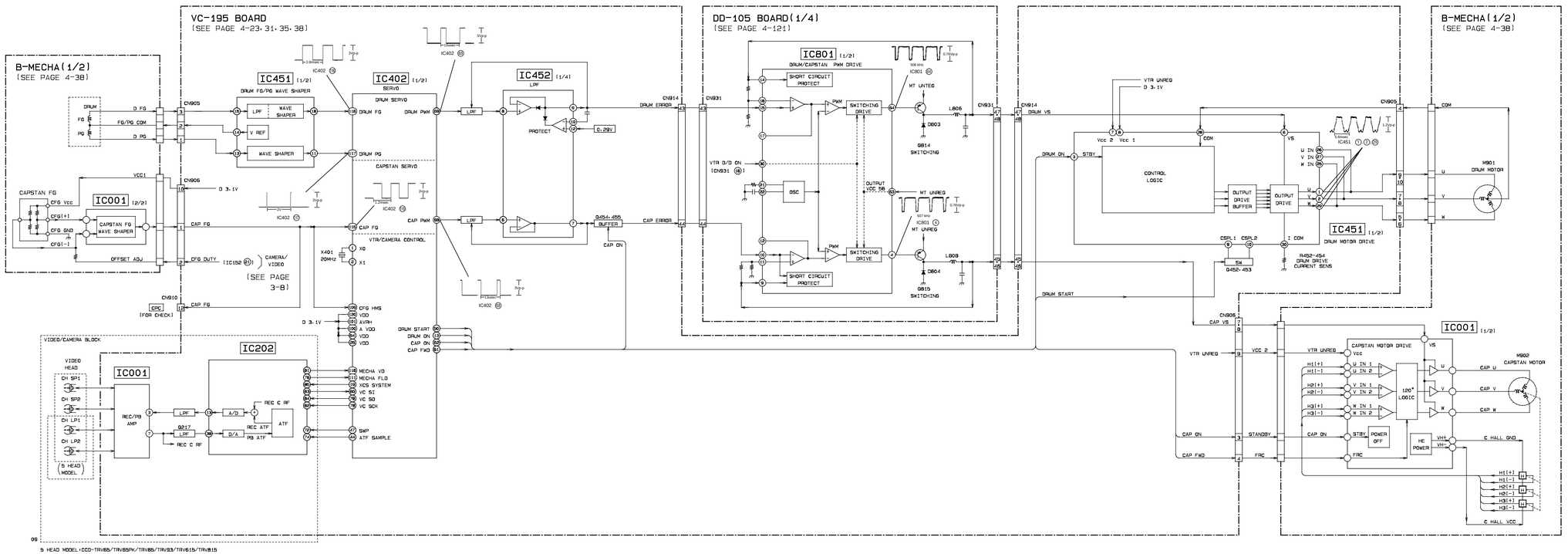

3-5. MODE CONTROL BLOCK DIAGRAM

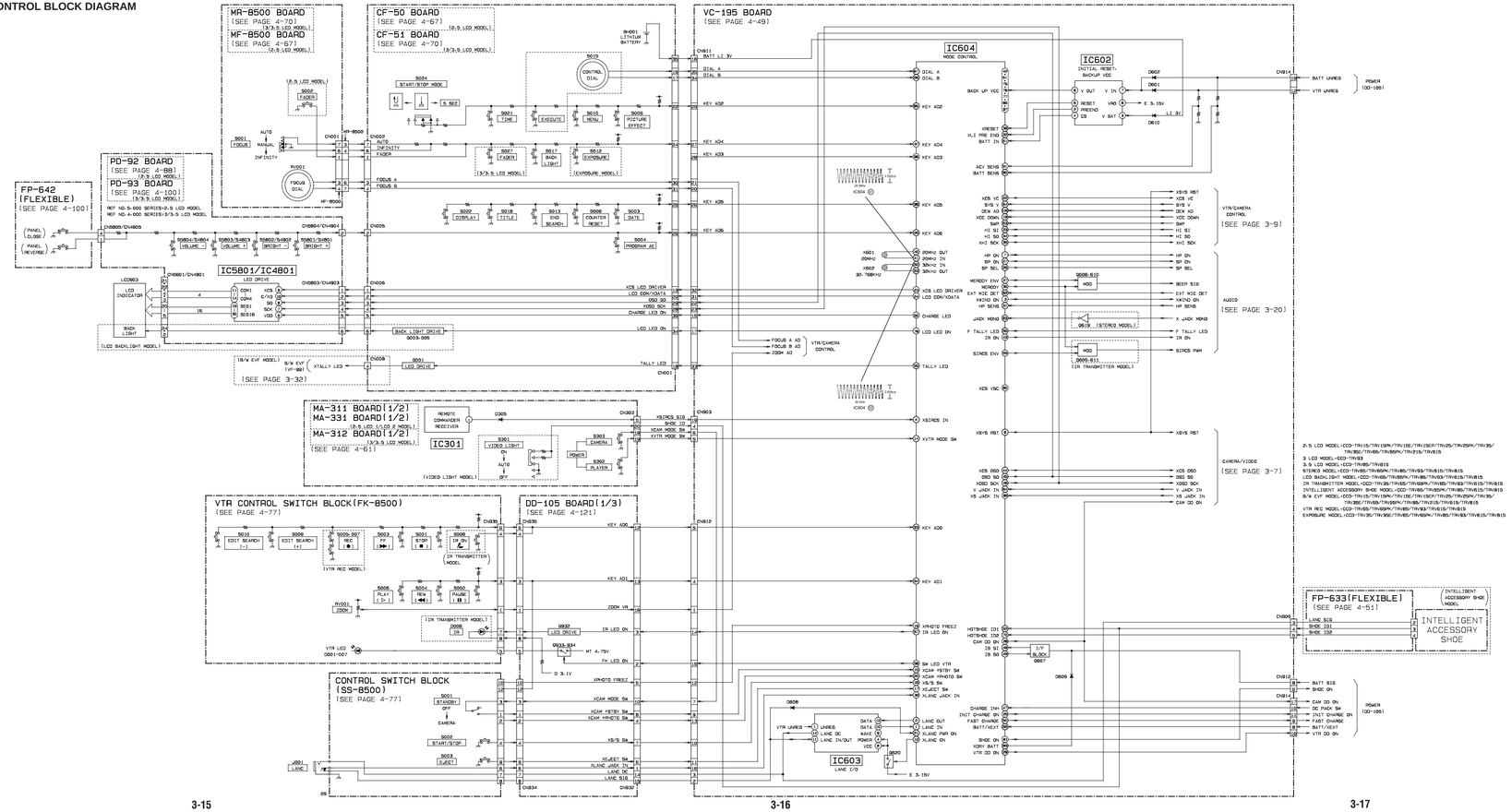

3-6. AUDIO BLOCK DIAGRAM

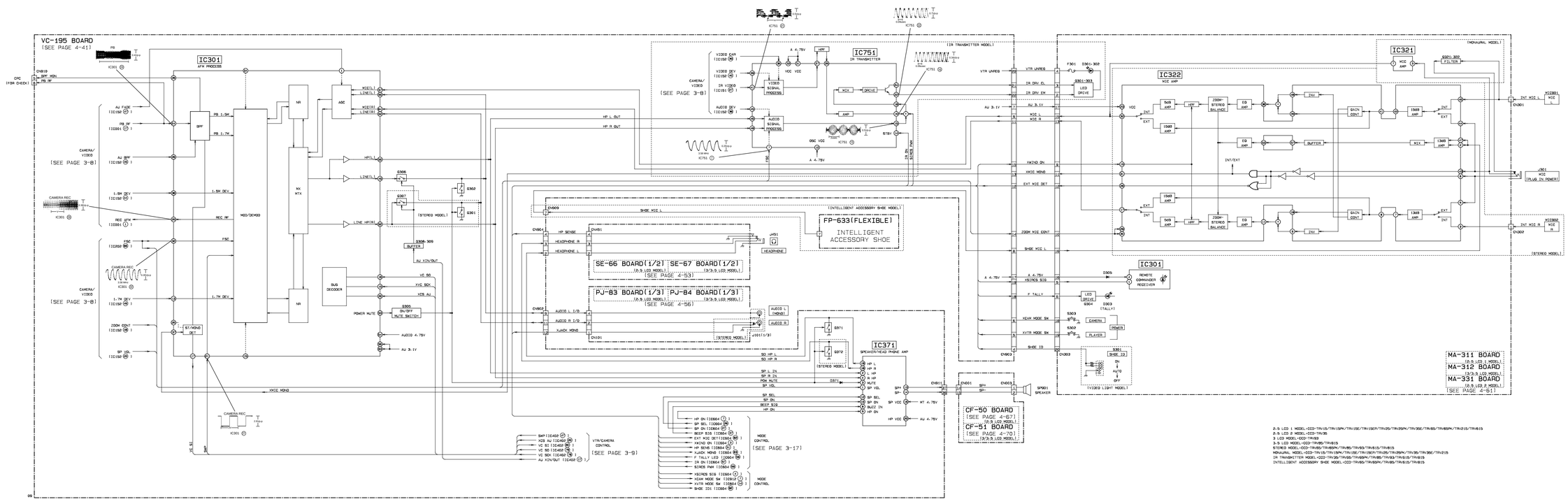

3-7. LCD (CCD-TRV35/TRV65/TRV65PK/TRV93/TRV615) BLOCK DIAGRAM

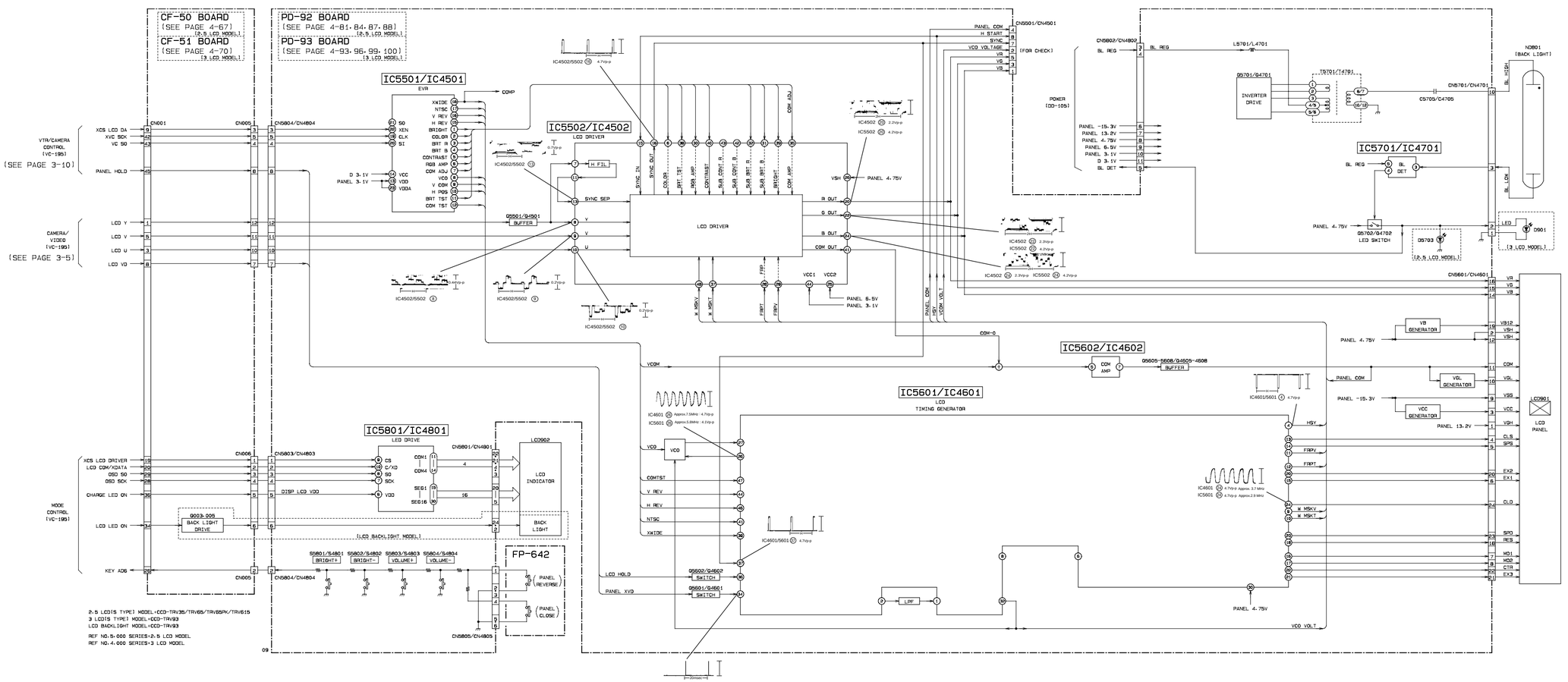

3-8. LCD (CCD-TRV15/TRV15PK/TRV15E/TRV15EP/TRV25/TRV25PK/TRV85/TRV215/TRV815) BLOCK DIAGRAM

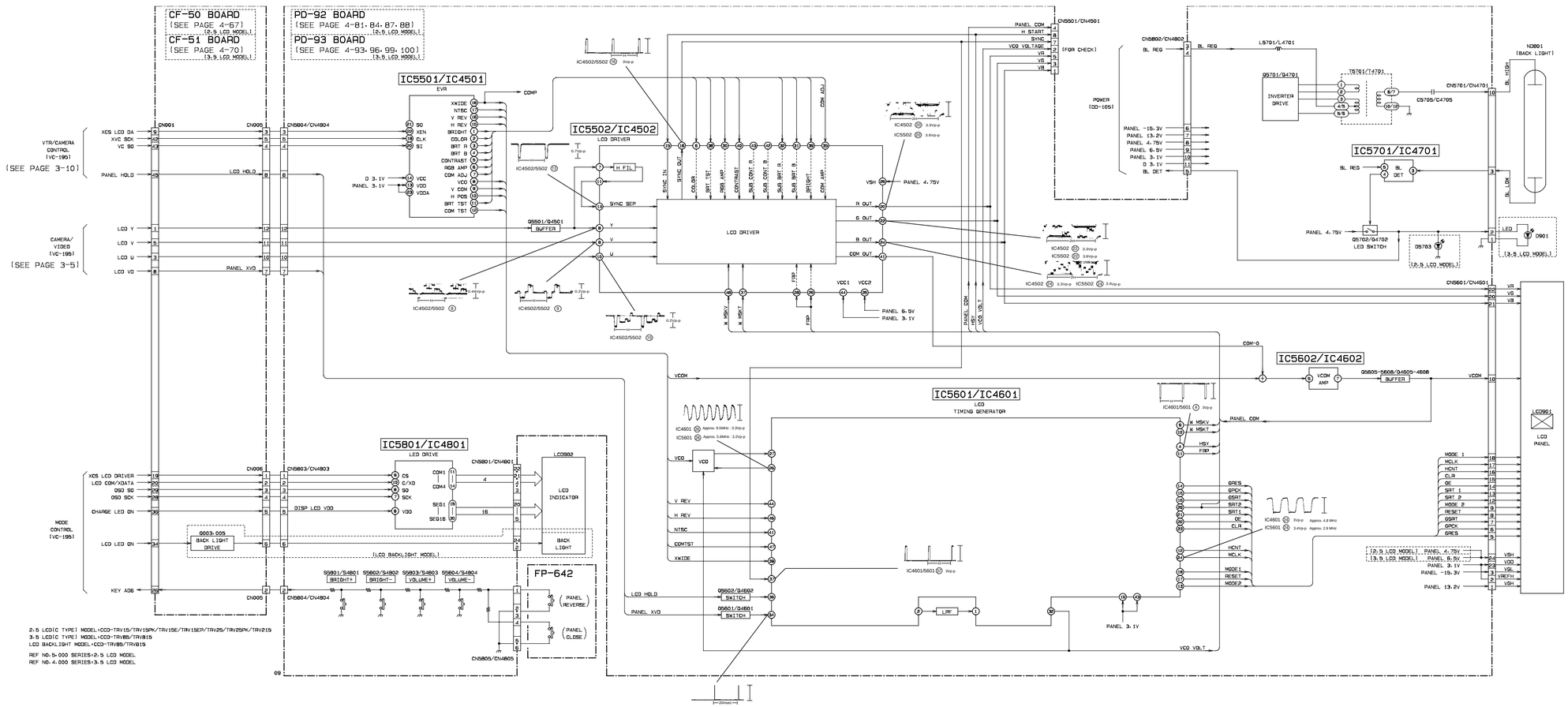

3-9. COLOR EVF BLOCK DIAGRAM

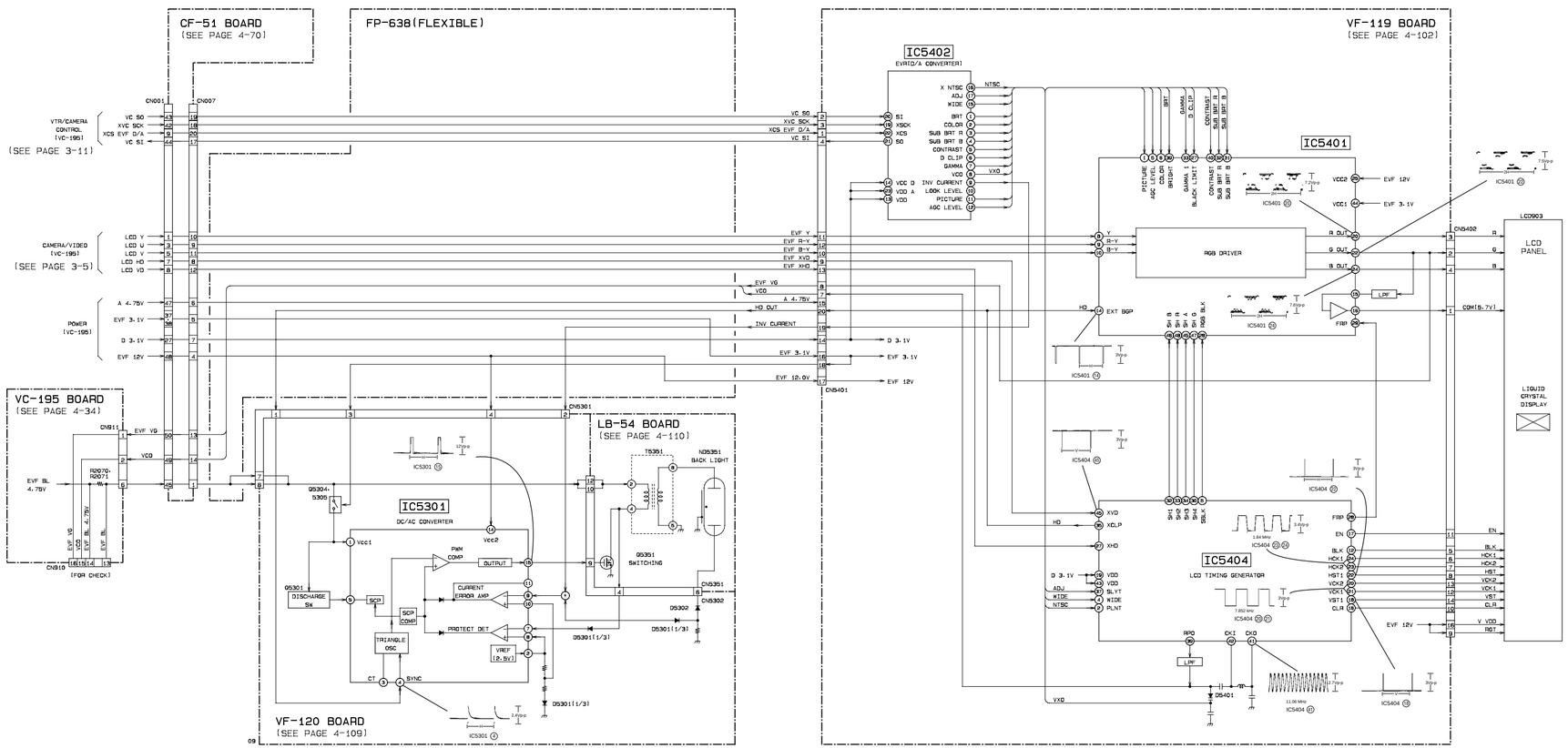

3-10. B/W EVF BLOCK DIAGRAM

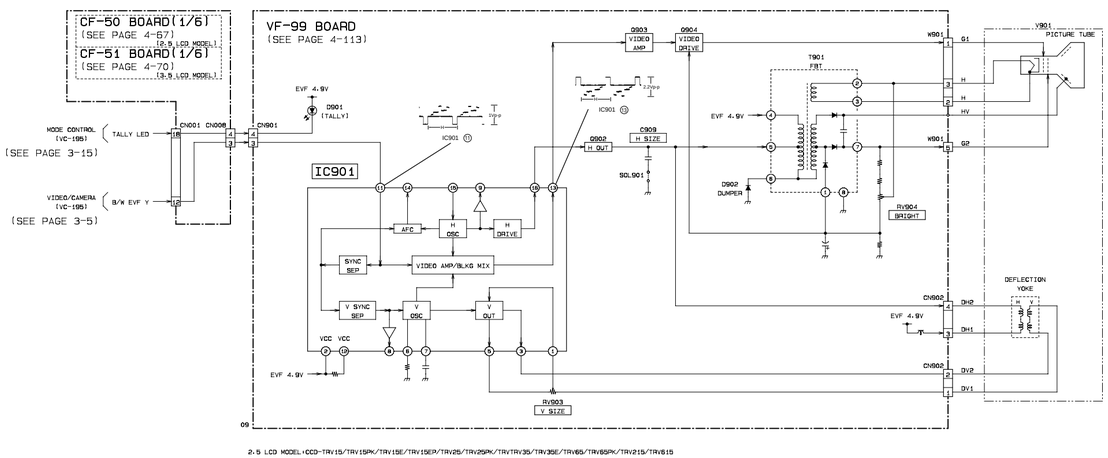

3-11. POWER BLOCK DIAGRAM

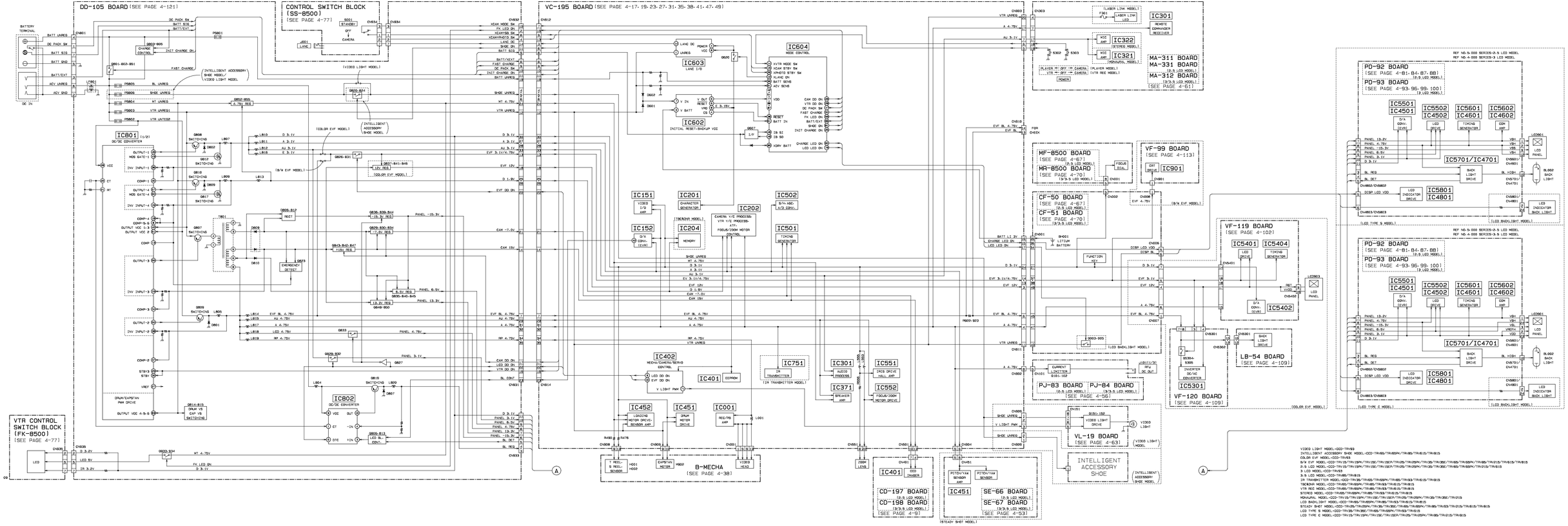
DD-105 BOARD (SEE PAGE 4-121)
CONTROL SWITCH BLOCK (SS-8500) (SEE PAGE 4-77)
VC-195 BOARD (SEE PAGE 4-17, 19, 23, 27, 31, 35, 38, 41, 47, 49)
VTR CONTROL SWITCH BLOCK (FK-8500) (SEE PAGE 4-77)
B-MECHA (SEE PAGE 4-38)
MF-8500 BOARD (SEE PAGE 4-67) (8.5 LCD MODEL)
MR-8500 BOARD (SEE PAGE 4-70) (9.5 LCD MODEL)
CF-50 BOARD (SEE PAGE 4-67) (8.5 LCD MODEL)
CF-51 BOARD (SEE PAGE 4-70) (9.5 LCD MODEL)
VF-99 BOARD (SEE PAGE 4-113)
VF-119 BOARD (SEE PAGE 4-102)
VF-120 BOARD (SEE PAGE 4-109)
LB-54 BOARD (SEE PAGE 4-109)
PJ-83 BOARD PJ-84 BOARD (SEE PAGE 4-56)
VL-19 BOARD (SEE PAGE 4-63)
MA-311 BOARD MA-331 BOARD (8.5 LCD MODEL) MA-312 BOARD (9.5 LCD MODEL) (SEE PAGE 4-61)
PD-92 BOARD (SEE PAGE 4-81, 84, 87, 88) (8.5 LCD MODEL)
PD-93 BOARD (SEE PAGE 4-93, 96, 99, 100) (9 LCD MODEL)
CD-197 BOARD (8.5 LCD MODEL) CD-198 BOARD (9.5 LCD MODEL) (SEE PAGE 4-91)
SE-66 BOARD (8.5 LCD MODEL) SE-67 BOARD (9.5 LCD MODEL) (SEE PAGE 4-53)
INTELLIGENT ACCESSORY SHOE
IC604 MODE CONTROL
IC603 LANC I/O
IC602 INITIAL RESET-BACKUP VCC
IC801 DC/DC CONVERTION
IC802 DC/DC CONVERTER
IC151 VIDEO I/O AMP
IC201 CHARACTER GENERATOR
IC202 CAMERA Y/C PROCESS-VTR Y/C PROCESS-ATF, FOCUS/ZOOM MOTOR CONTROL
IC502 8-bit A/D CONV.
IC501 TIMING GENERATOR
IC152 D/A CONV. (EVF)
IC204 MEMORY
IC402 MECHA/CAMERA/SERVO CONTROL
IC401 EEPROM
IC751 IR TRANSMITTER
IC301 AUDIO PROCESS
IC371 SPEAKER AMP
IC551 IRIS DRIVE HALL AMP
IC552 FOCUS/ZOOM MOTOR DRIVE
IC452 LOADING MOTOR DRIVE/SENSOR AMP
IC451 DRUM MOTOR DRIVE
IC001 REC/PB AMP
IC401 CCD IMAGER
IC451 PITCH/YAW SENSOR AMP
IC301 REMOTE COMMANDER RECEIVER
IC322 MIC AMP
IC321 MIC AMP
IC5401 LCD DRIVE
IC5402 TIMING GENERATOR
IC5301 INVERTER DC/AC CONVERTER
IC5501/IC4501 D/A CONV. (EVF)
IC5502/IC4502 LCD DRIVE
IC5601/IC4601 TIMING GENERATOR
IC5602/IC4602 CDM AMP
IC5701/IC4701 BACK LIGHT DRIVE
IC5801/IC4801 LCD INDICATOR DRIVE
IC901 CRT DRIVE
BATTERY TERMINAL
DC IN
VTR CONTROL SWITCH (FK-8500)
LED
LCD PANEL
BACK LIGHT
INDICATOR BACK LIGHT
CRT
FOCUS DIAL
LASER LINK MODULE
LASER LINK LED
REMOTE COMMANDER RECEIVER
MIC AMP
MIC JACK
PLAYER OFF CAMERA
VTR OFF CAMERA
POWER
FUNCTION KEY
LITHIUM BATTERY
CHARGE CONTROL
INIT CHARGE ON
FAST CHARGE
INTELLIGENT ACCESSORY SHOE MODEL
VIDEO LIGHT MODEL
DRUM/CAPSTAN PWM DRIVE
DRUM VS CAP VS SWITCHING
CAPSTAN MOTOR
T REEL-S REEL-SENSOR
VIDEO HEAD
CAPACITOR
CURRENT LIMITTER
INVERTER DC/AC CONVERTER
VIDEO LIGHT DRIVE
PITCH/YAW SENSOR
PITCH/YAW SENSOR
REF NO. 5-000 SERIES-8.5 LCD MODEL
REF NO. 4-000 SERIES-9.5 LCD MODEL
REF NO. 5-000 SERIES-8.5 LCD MODEL
REF NO. 4-000 SERIES-9.5 LCD MODEL
VIDEO LIGHT MODEL:CCD-TRV93
INTELLIGENT ACCESSORY SHOE MODEL:CCD-TRV65/TRV65PK/TRV85/TRV815/TRV815
COLOR EVF MODEL:CCD-TRV93
B/W EVF MODEL:CCD-TRV15/TRV15PK/TRV15E/TRV15EP/TRV25/TRV25PK/TRV35/TRV35E/TRV65/TRV65PK/TRV85/TRV215/TRV615/TRV815
2-LCD MODEL:CCD-TRV15/TRV15PK/TRV15E/TRV15EP/TRV25/TRV25PK/TRV35/TRV35E/TRV65/TRV65PK/TRV85/TRV215/TRV815
3 LCD MODEL:CCD-TRV93
3.5 LCD MODEL:CCD-TRV65/TRV815
IR TRANSMITTER MODEL:CCD-TRV35/TRV65/TRV65PK/TRV85/TRV93/TRV215/TRV615/TRV815
TRACKBOW MODEL:CCD-TRV65/TRV65PK/TRV85/TRV93/TRV815/TRV815
VTR REC MODEL:CCD-TRV65/TRV65PK/TRV85/TRV93/TRV815/TRV815
STEREO MODEL:CCD-TRV65/TRV65PK/TRV85/TRV93/TRV815/TRV815
MONAURAL MODEL:CCD-TRV15/TRV15PK/TRV15E/TRV15EP/TRV25/TRV25PK/TRV35/TRV35E/TRV215
LCD BACKLIGHT MODEL:CCD-TRV65/TRV65PK/TRV85/TRV93/TRV815/TRV815
STEADY SHOT MODEL:CCD-TRV25/TRV25PK/TRV35/TRV35E/TRV65/TRV65PK/TRV85/TRV93/TRV215/TRV615/TRV815
LCD TYPE B MODEL:CCD-TRV35/TRV35E/TRV65/TRV65PK/TRV85/TRV93/TRV815
LCD TYPE C MODEL:CCD-TRV15/TRV15PK/TRV15E/TRV15EP/TRV25/TRV25PK/TRV35/TRV215/TRV815

4-1. FRAME SCHEMATIC DIAGRAM (1)

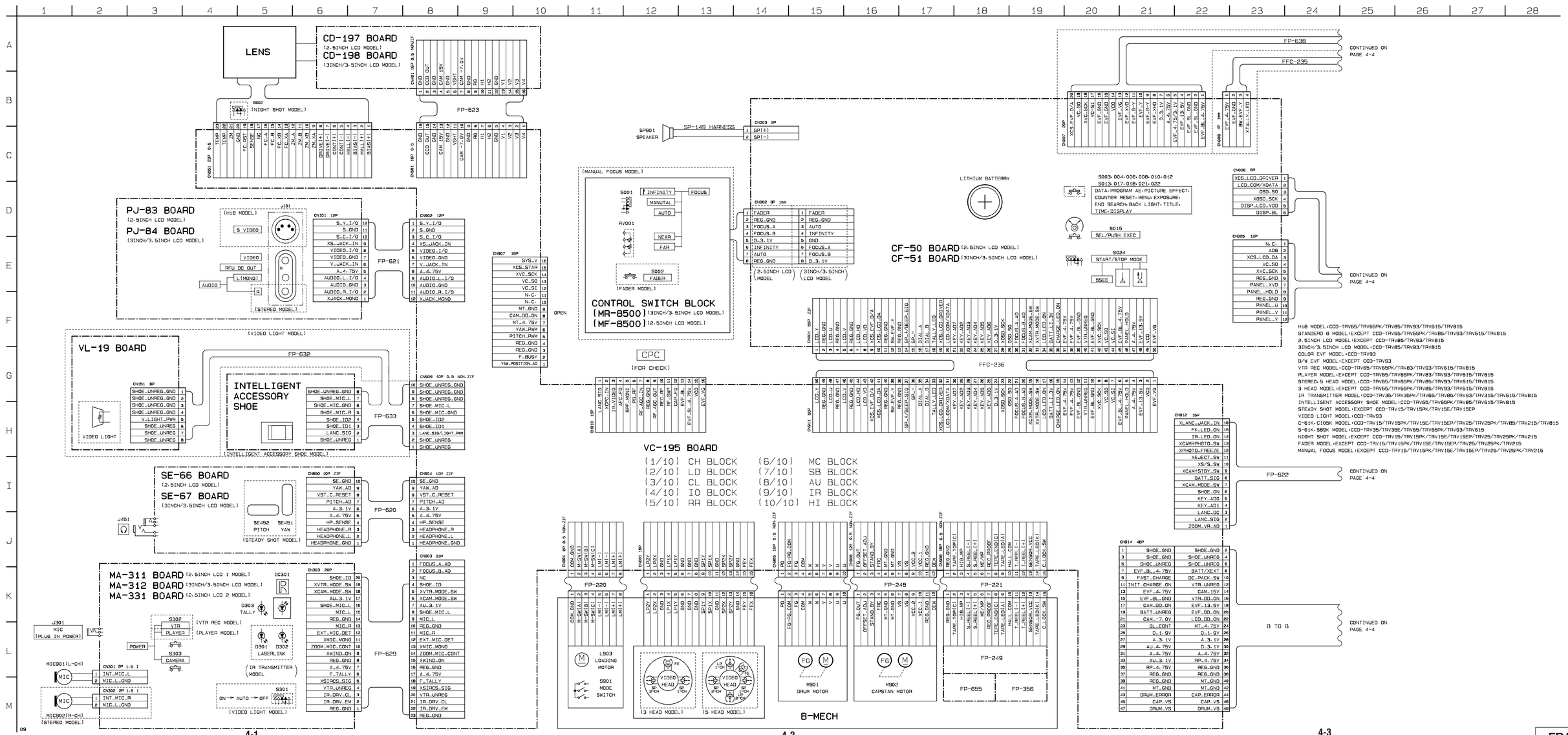

FRAME SCHEMATIC DIAGRAM (2)

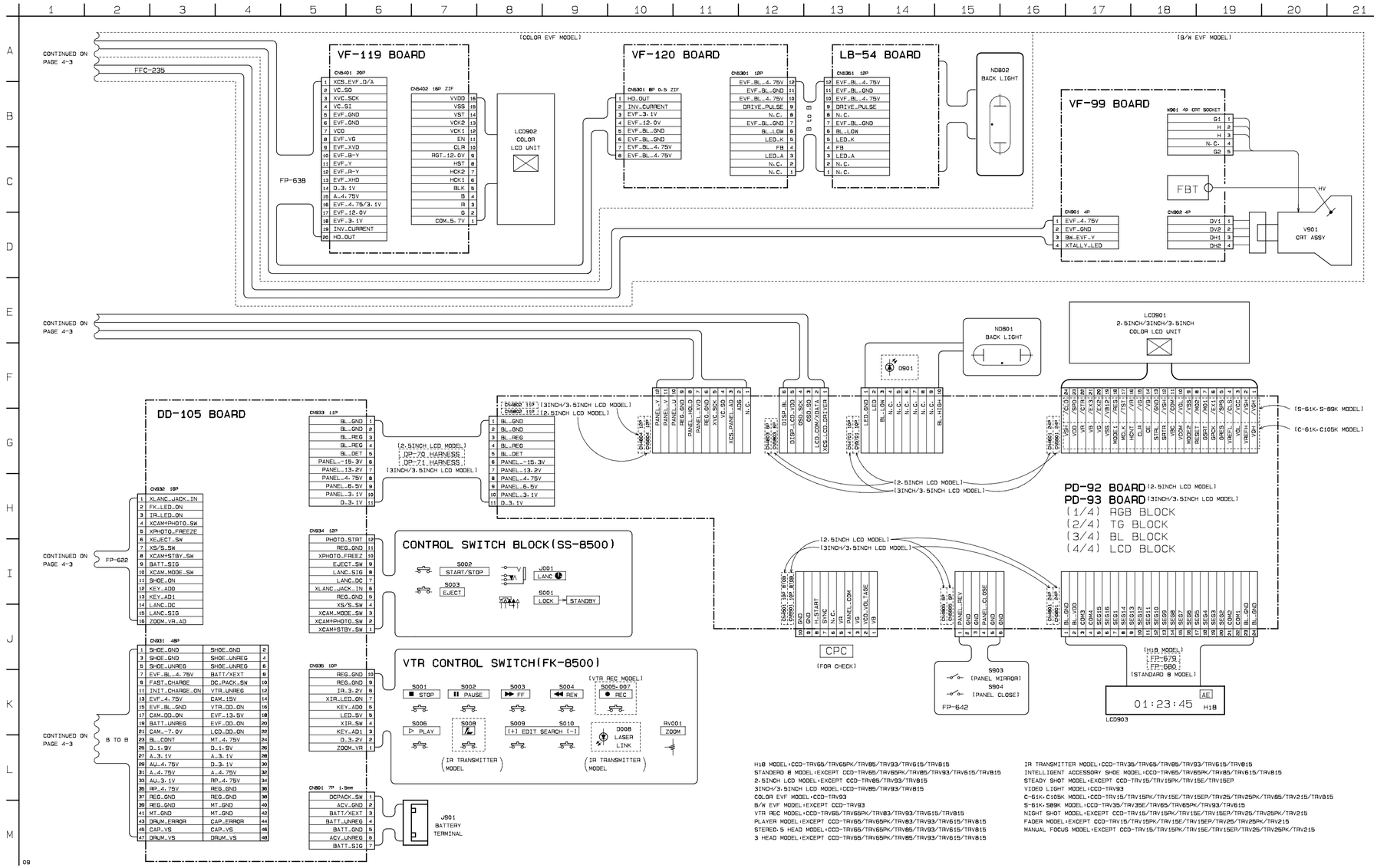

H18 MODEL:CCD-TRV65/TRV65PK/TRV85/TRV93/TRV615/TRV815
STANDERD 8 MODEL:EXCEPT CCD-TRV65/TRV65PK/TRV85/TRV93/TRV615/TRV815
2.5INCH LCD MODEL:EXCEPT CCD-TRV65/TRV93/TRV815
3INCH/3.5INCH LCD MODEL:CCD-TRV85/TRV93/TRV815
COLOR EVF MODEL:CCD-TRV93
B/W EVF MODEL:EXCEPT CCD-TRV93
VTR REC MODEL:CCD-TRV65/TRV65PK/TRV83/TRV93/TRV615/TRV815
PLAYER MODEL:EXCEPT CCD-TRV65/TRV65PK/TRV83/TRV93/TRV615/TRV815
STEREO-5 HEAD MODEL:CCD-TRV65/TRV65PK/TRV85/TRV93/TRV615/TRV815
3 HEAD MODEL:EXCEPT CCD-TRV65/TRV65PK/TRV85/TRV93/TRV615/TRV815

IR TRANSMITTER MODEL:CCD-TRV35/TRV65/TRV85/TRV93/TRV615/TRV815
INTELLIGENT ACCESSORY SHOE MODEL:CCD-TRV65/TRV65PK/TRV85/TRV615/TRV815
STEADY SHOT MODEL:EXCEPT CCD-TRV15/TRV15PK/TRV15E/TRV15EP
VIDEO LIGHT MODEL:CCD-TRV93
C-61K-C105K MODEL:CCD-TRV15/TRV15PK/TRV15E/TRV15EP/TRV25/TRV25PK/TRV85/TRV215/TRV815
S-61K-S89K MODEL:CCD-TRV35/TRV35E/TRV65/TRV65PK/TRV93/TRV615
NIGHT SHOT MODEL:EXCEPT CCD-TRV15/TRV15PK/TRV15E/TRV15EP/TRV25/TRV25PK/TRV215
FADER MODEL:EXCEPT CCD-TRV15/TRV15PK/TRV15E/TRV15EP/TRV25/TRV25PK/TRV215
MANUAL FOCUS MODEL:EXCEPT CCD-TRV15/TRV15PK/TRV15E/TRV15EP/TRV25/TRV25PK/TRV215

4-2. PRINTED WIRING BOARDS AND SCHEMATIC DIAGRAMS

THIS NOTE IS COMMON FOR PRINTED WIRING BOARDS AND SCHEMATIC DIAGRAMS.
(In addition to this, the necessary note is printed in each block.)

- **For printed wiring boards.**
- b : Pattern from the side which enable seeing.
  (The other layer's patterns are not indicated.)
- Circled numbers refer to waveforms.
- Through hole is omitted.
- There are few cases that the part printed on diagram isn't mounted in this model.
- Chip parts.

Transistor

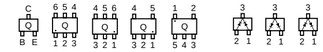

Diode

- **For schematic diagrams.**
- All capacitors are in μF unless otherwise noted. pF: μμF.
  50 V or less are not indicated except for electrolytics and tantalums.
- Chip resistor are 1/16W unless otherwise noted.
  kΩ : 1000Ω, MΩ : 1000kΩ.
- Caution when replacing chip parts.
  New parts must be attached after removal of chip.
  Be careful not to heat the minus side of tantalum capacitor, because it is damaged by the heat.
- Some chip part will be indicated as follows.
  Example C541 L452
  22U 10UH
  TA A 2520

- Constants of resistors, capasitors, ICs and etc with XX indicate tha they are not used. In such cases, the unused circuits may be indicated.
- Parts with ☆ differ according to the model/destination. Refer to the mount table for each function.
- All variable and adjustable resistors have characteristic curve B, unless otherwise noted.
- Signal name
  XEDIT → $\overline{\text{EDIT}}$ PB/XREC → $\overline{\text{PB/REC}}$
- 2 : non flammable resistor.
- 1 : fusible resistor.
- H : panel designation.
- A : B+ Line
- B : B– Line
- J : IN/OUT direction of (+, –) B LINE.
- C : adjustment for repair.
- Circled numbers refer to waveforms.

The components identified by mark ⚠or dotted line with mark ⚠ are critical for safety. Replace only with part number specified.	Les composants identifiés par une marque ⚠ sont critiques pour la sécurité. Ne les remplacer que par une piéce portant le numéro spécifié.

When indicating parts by reference number, please include the board name.

Refer to page 3 as for "Table for difference of functions" of models and classification.

- **Measuring conditions voltage value and waveform.**
- The object is color bar chart of pattern box.
- Voltages and dc between ground and measurement points. Readings are taken with a digital multimeter (DC 10MΩ).
- Voltages variations may be noted due to normal production tolerances.

1.Connection

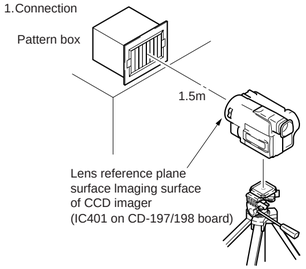

2.Adjust the distance so that the output waveform of Fig. a and the Fig. b can be obtain.

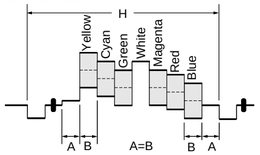

Fig. a (Video output terminal output waveform)

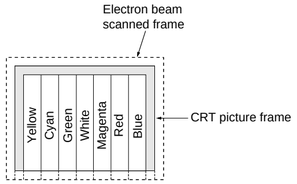

Fig. b (Picture on monitor TV)

CD-197/198 (CCD IMAGER) (2.5 INCH LCD, 3 INCH/3.5 INCH LCD MODEL) PRINTED WIRING BOARD

– Ref No. CD-197 BOARD: 4,000 series, CD-198 BOARD: 9,000 series –

CD-197/198 BOARD (SIDE B)

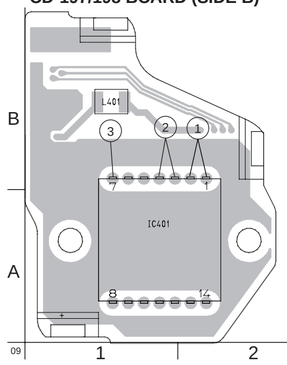

CD-197/198 BOARD (SIDE A)

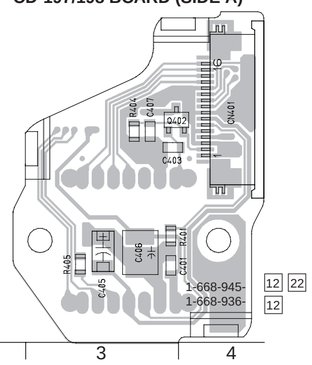

CD-197/ CD-198 BOARD	
C401	A-3
C403	B-3
C405	A-3
C406	A-3
C407	B-3
CN401	B-4
IC401	A-1
L401	B-1
Q402	B-3
R401	A-3
R404	B-3
R405	A-3

- **For Printed Wiring Boards.**

There are few cases that the part isn't mounted in this model is printed on this diagram.

- Chip transistor

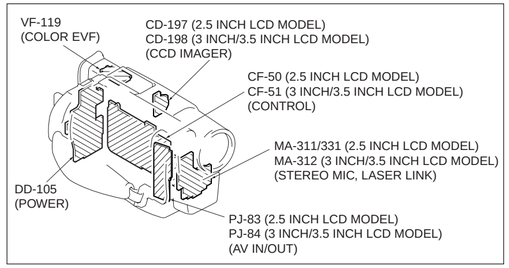

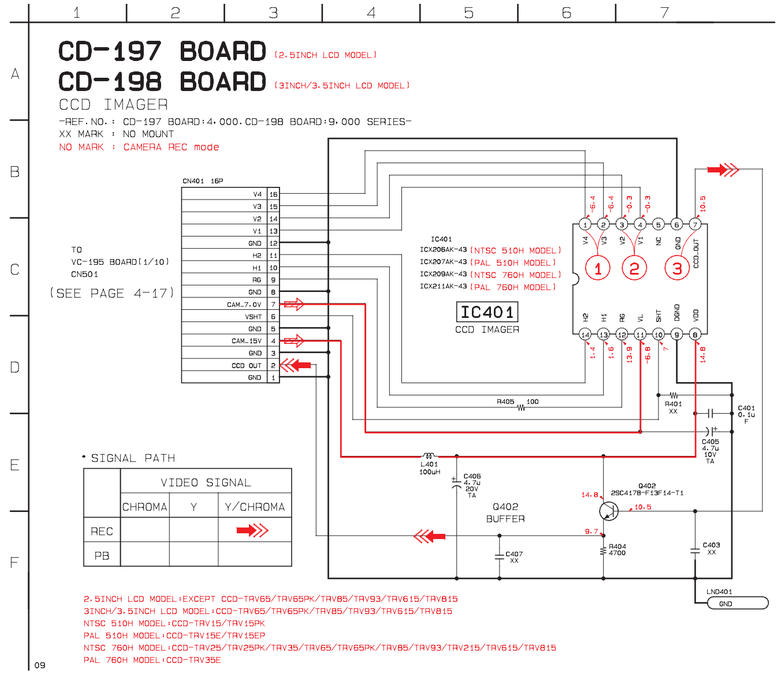

CD-197/198 BOARD
CAMERA REC

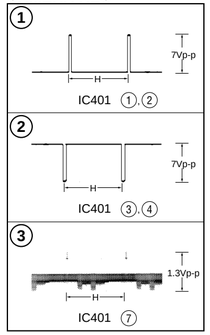

Note on the CCD imager replacement

- The CCD imager is not mounted for the already mounted CD-197/198 board supplied as the repair parts.
  When replacing the CD-197/198 board, remove the CCD imager from the old board and install on the new board.
- Perform all adjustments of the camera block when the CCD imager has been replaced.
- Handle the CCD imager with attention such as MOS IC as it may be broken by static electricity in the structure.
  Also, prevent the receiving light section from dust attached and strong light.

VC-195 BOARD
(SIDE B)

C002	A-5	C213	D-5	C481	A-1	C774	A-8	L156	C-7	Q454	A-1	R112	C-7	R428	B-2	R628	E-2	R773	B-8
C003	A-5	C217	D-4	C482	A-2	C775	A-8	L201	D-3	Q455	A-1	R152	D-8	R429	B-1	R629	F-1	R774	B-9
C008	A-4	C218	D-4	C483	A-2	C776	B-8	L202	D-4	Q551	G-7	R154	D-8	R430	B-1	R630	F-2	R775	A-8
C009	B-5	C227	D-5	C484	A-2	C777	A-8	L203	D-6	Q607	F-2	R157	D-8	R432	C-2	R631	G-2	R921	B-1
C011	B-5	C229	E-5	C485	A-1	C778	B-9	L204	D-4	Q619	E-3	R179	D-8	R433	C-2	R632	G-1	R922	D-1
C012	B-5	C232	D-3	C504	E-6	C781	B-8	L205	D-6	Q620	F-2	R180	D-8	R434	C-2	R633	E-2	R923	D-1
C013	B-6	C233	D-5	C505	E-6			L206	D-3	Q705	F-7	R183	E-8	R452	A-3	R634	E-2	R924	D-1
C014	B-6	C234	D-5	C506	E-7	CN904	A-9	L207	E-4			R184	E-8	R453	A-3	R635	E-2	R925	D-1
C015	B-5	C235	D-3	C507	E-6	CN907	D-9	L209	E-4	R001	A-6	R202	D-3	R454	A-3	R636	E-2	R926	G-7
C016	B-5	C236	D-3	C508	E-6	CN910	D-1	L402	C-2	R002	A-6	R203	D-4	R455	A-3	R637	G-2	R927	G-7
C017	B-5	C239	E-4	C509	E-7			L501	E-6	R008	A-4	R204	D-3	R456	A-3	R638	G-2		
C019	B-5	C243	E-3	C510	E-6	D001	C-4	L552	F-7	R009	A-5	R205	D-3	R457	A-3	R639	G-2	RB12	C-8
C020	B-6	C243	F-3	C514	E-5	D201	D-3	L553	G-7	R010	B-6	R206	D-4	R459	A-3	R640	F-2	RB151	D-8
C022	B-5	C244	F-3	C515	E-5	D202	D-3	L602	E-3	R011	B-5	R208	D-3	R460	A-3	R641	F-3		
C025	B-6	C245	D-4	C518	F-5	D371	E-8	L701	F-7	R012	B-5	R210	D-3	R461	A-3	R642	F-2	TH401	B-4
C038	B-6	C246	D-4	C553	G-6	D502	F-5	L702	F-7	R013	B-6	R211	D-3	R462	A-3	R643	F-2		
C040	B-6	C247	D-4	C554	G-7	D601	E-2	L704	F-8	R014	B-4	R212	D-6	R463	A-3	R644	F-2	X151	D-7
C042	B-5	C249	E-4	C556	G-7	D602	E-2	L751	B-8	R015	B-5	R214	D-5	R467	A-2	R645	E-2	X401	B-3
C043	B-5	C252	F-3	C557	G-5	D604	F-2	L752	B-8	R016	B-6	R215	D-5	R468	A-2	R646	F-2	X501	F-5
C048	B-6	C301	B-9	C558	G-5	D608	F-1	L753	B-8	R017	B-6	R216	D-5	R469	A-2	R647	F-2		
C050	C-6	C312	C-9	C559	F-7	D609	F-2			R018	B-5	R217	E-4	R470	A-2	R648	F-2		
C051	B-5	C371	E-8	C563	F-6	D611	E-2	Q003	A-5	R019	B-5	R223	D-3	R471	A-2	R649	F-2		
C054	B-5	C372	E-8	C564	F-7	D910	G-1	Q004	A-6	R020	B-4	R224	D-3	R472	A-3	R651	F-2		
C056	B-5	C378	F-7	C566	G-7			Q005	A-5	R021	B-5	R226	D-4	R473	A-1	R652	F-3		
C058	B-6	C380	E-7	C569	G-6	FB202	E-4	Q006	A-5	R023	B-6	R240	D-4	R475	A-1	R653	F-3		
C060	C-5	C381	E-7	C572	F-6	FB203	E-4	Q007	A-6	R025	B-6	R244	D-3	R477	A-2	R654	F-3		
C066	B-6	C382	F-8	C603	F-1	FB204	F-3	Q008	B-6	R029	B-5	R246	D-3	R479	A-2	R655	F-2		
C067	C-6	C383	E-8	C607	E-2	FB205	F-3	Q009	B-6	R031	B-5	R247	D-3	R480	A-2	R662	E-3		
C068	C-6	C384	E-8	C610	F-2	FB206	D-4	Q010	B-5	R040	B-5	R248	E-3	R481	A-2	R663	F-3		
C069	C-5	C385	E-8	C611	F-2	FB501	E-5	Q011	B-5	R041	B-5	R249	E-3	R482	A-2	R665	F-3		
C070	C-6	C387	F-8	C613	E-1	FB502	E-6	Q012	B-5	R042	B-5	R250	F-3	R483	A-1	R678	F-3		
C072	C-6	C388	E-8	C625	E-2	FB503	E-5	Q016	B-5	R047	B-5	R254	D-1	R484	A-1	R686	E-2		
C074	C-6	C402	C-1	C626	E-2	FB504	E-5	Q017	B-6	R048	B-5	R255	E-5	R485	A-1	R687	E-2		
C076	C-5	C413	B-2	C627	F-2	FB505	E-5	Q018	C-5	R049	B-6	R257	D-4	R486	B-1	R689	F-3		
C077	C-5	C451	A-3	C630	F-3	FB506	E-5	Q019	C-6	R050	B-6	R304	B-9	R487	A-1	R690	F-2		
C080	C-5	C452	A-3	C634	F-3			Q021	B-6	R051	B-6	R305	C-9	R504	E-6	R691	E-2		
C083	C-5	C453	A-3	C636	F-2	IC152	C-8	Q023	C-6	R056	B-6	R329	A-6	R505	E-6	R692	F-1		
C086	C-4	C454	A-3	C704	F-7	IC201	E-5	Q025	C-6	R058	B-6	R330	A-7	R508	E-5	R704	G-8		
C087	C-4	C455	A-3	C714	F-8	IC204	F-4	Q026	C-6	R066	B-6	R371	D-8	R510	E-5	R705	G-7		
C090	C-6	C456	A-4	C715	F-8	IC371	E-7	Q030	C-5	R067	C-6	R372	D-8	R511	E-5	R716	G-8		
C152	D-8	C457	A-3	C751	B-6	IC401	C-2	Q031	C-5	R068	C-7	R373	D-9	R512	F-5	R717	F-8		
C157	E-8	C458	A-4	C752	A-7	IC403	B-2	Q032	C-7	R069	C-5	R374	D-8	R527	E-5	R718	F-7		
C158	D-8	C459	A-4	C753	A-7	IC404	B-2	Q035	C-4	R069	C-6	R375	D-8	R552	G-6	R719	F-8		
C159	C-8	C460	A-4	C754	A-7	IC451	A-4	Q037	C-4	R070	C-6	R376	D-8	R555	G-7	R723	F-7		
C174	B-8	C461	A-3	C755	A-7	IC452	A-2	Q038	C-5	R076	C-6	R377	E-8	R563	G-5	R752	A-7		
C175	D-8	C462	A-4	C756	A-7	IC501	E-6	Q039	C-5	R077	C-6	R378	E-8	R564	G-6	R753	A-7		
C176	D-8	C463	A-3	C757	A-7	IC552	G-6	Q041	B-5	R078	C-6	R379	E-7	R566	G-5	R754	B-6		
C182	D-8	C464	B-3	C758	A-8	IC602	E-2	Q042	C-4	R079	C-6	R382	E-8	R567	G-6	R755	B-6		
C183	D-8	C465	B-4	C759	B-6	IC751	A-8	Q151	D-8	R080	C-6	R383	E-8	R570	F-5	R757	A-7		
C190	D-8	C466	B-3	C760	B-6			Q202	D-3	R083	C-5	R384	E-7	R579	G-6	R758	A-7		
C191	C-7	C467	B-3	C761	B-8	L002	B-4	Q203	D-3	R084	C-5	R385	E-8	R582	G-6	R759	A-7		
C192	C-7	C468	B-3	C762	B-8	L003	B-4	Q204	D-5	R087	C-5	R386	F-8	R603	F-2	R760	B-8		
C202	D-3	C469	B-4	C763	B-8	L007	C-6	Q205	E-5	R088	C-5	R386	F-8	R604	F-2	R761	A-8		
C203	D-3	C470	B-4	C764	B-8	L008	C-6	Q208	D-6	R090	C-5	R388	E-8	R608	F-2	R762	A-8		
C204	D-4	C471	B-4	C765	A-8	L010	C-6	Q217	D-4	R094	C-5	R389	E-8	R612	E-1	R763	A-8		
C205	E-4	C473	A-1	C766	A-8	L011	C-6	Q218	D-4	R095	C-7	R403	C-2	R618	F-1	R764	B-8		
C206	D-4	C474	A-2	C767	B-8	L014	C-5	Q306	B-9	R097	C-5	R404	C-3	R619	F-1	R765	B-8		
C207	D-3	C475	A-2	C768	B-8	L015	C-5	Q307	C-9	R100	C-5	R415	B-2	R620	F-1	R766	A-8		
C208	D-3	C476	A-2	C769	A-8	L017	C-5	Q311	A-6	R104	C-5	R416	B-2	R621	F-1	R767	B-8		
C209	D-6	C477	A-2	C770	A-8	L019	B-6	Q312	A-7	R105	C-6	R417	B-2	R622	F-2	R768	A-8		
C210	D-6	C478	A-2	C771	B-8	L152	D-8	Q451	B-3	R106	C-6	R418	B-2	R624	F-1	R770	A-8		
C211	D-3	C479	A-2	C772	A-8	L153	D-7	Q452	B-4	R109	B-4	R426	C-2	R625	F-2	R771	A-8		
C212	D-3	C480	A-2	C773	B-8	L154	D-7	Q453	B-4	R110	B-5	R427	B-2	R627	E-2	R772	A-8		

- **For Printed Wiring Boards.**
- This board is four-layer print board. However, the patterns of layers 2 to 3 have not been included in the diagram.

There are few cases that the part isn't mounted in this model is printed on this diagram.

- Chip transistor

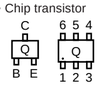

Chip diode

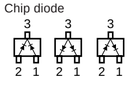

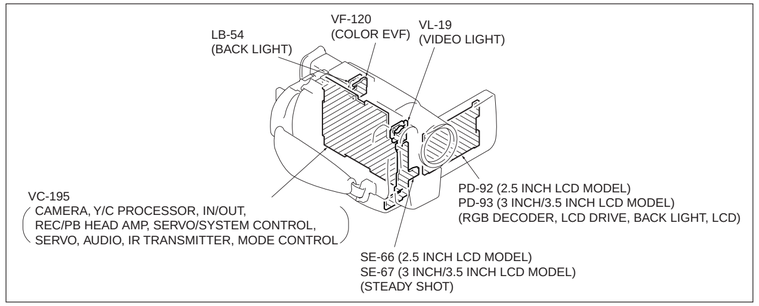

VC-195 (CAMERA, Y/C PROCESSOR, IN/OUT, REC/PB HEAD AMP, SERVO/SYSTEM CONTROL, SERVO, AUDIO, IR TRANSMITTER, MODE CONTROL) PRINTED WIRING BOARD

– Ref No. VC-195 BOARD: 1,000 series –

VC-195 BOARD (SIDE B)

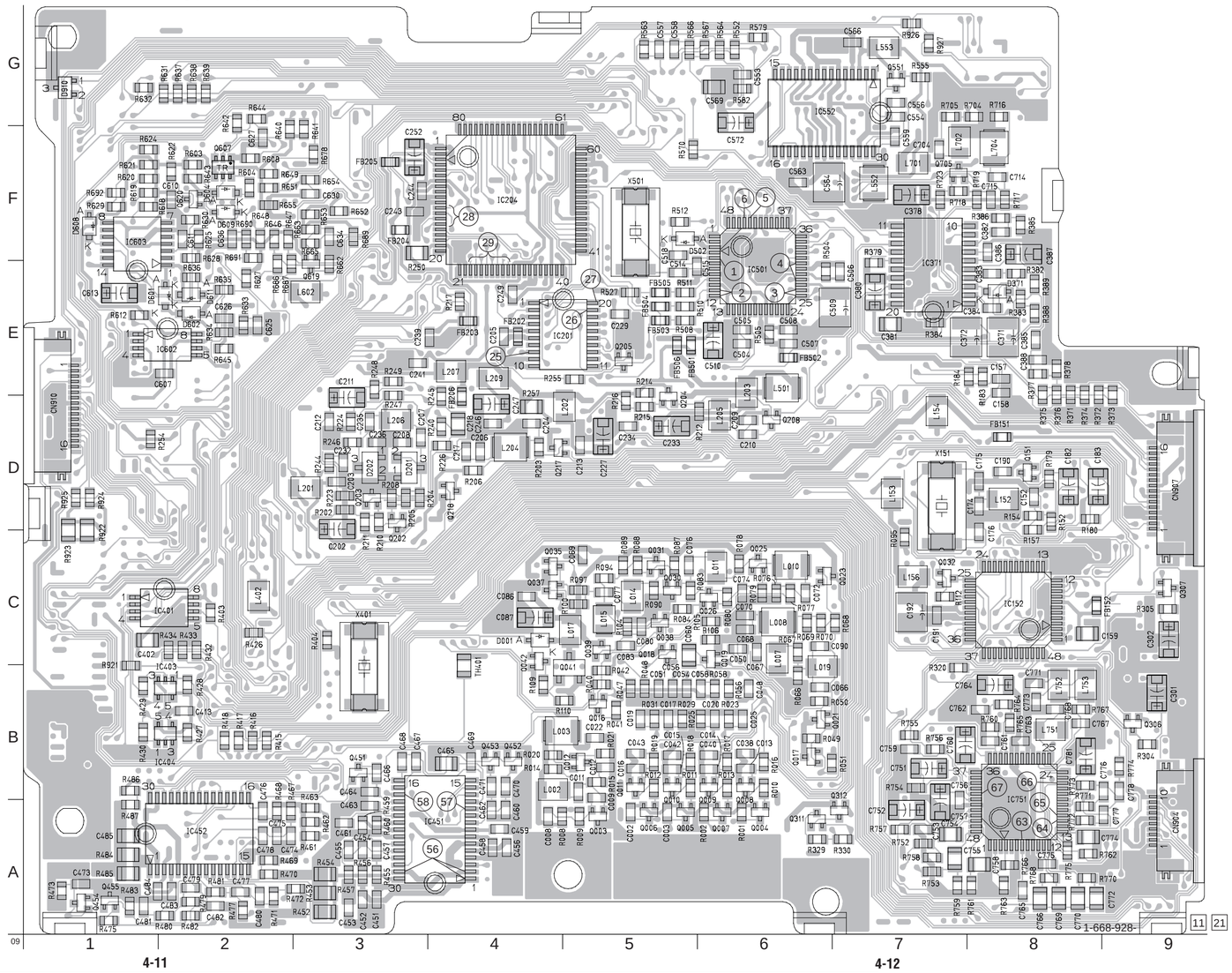

CAMERA, Y/C PROCESSOR, IN/OUT, REC/PB HEAD AMP, SERVO/SYSTEM CONTROL, SERVO, AUDIO, IR TRANSMITTER, MODE CONTROL

VC-195 (SIDE B)

VC-195 BOARD (SIDE A)

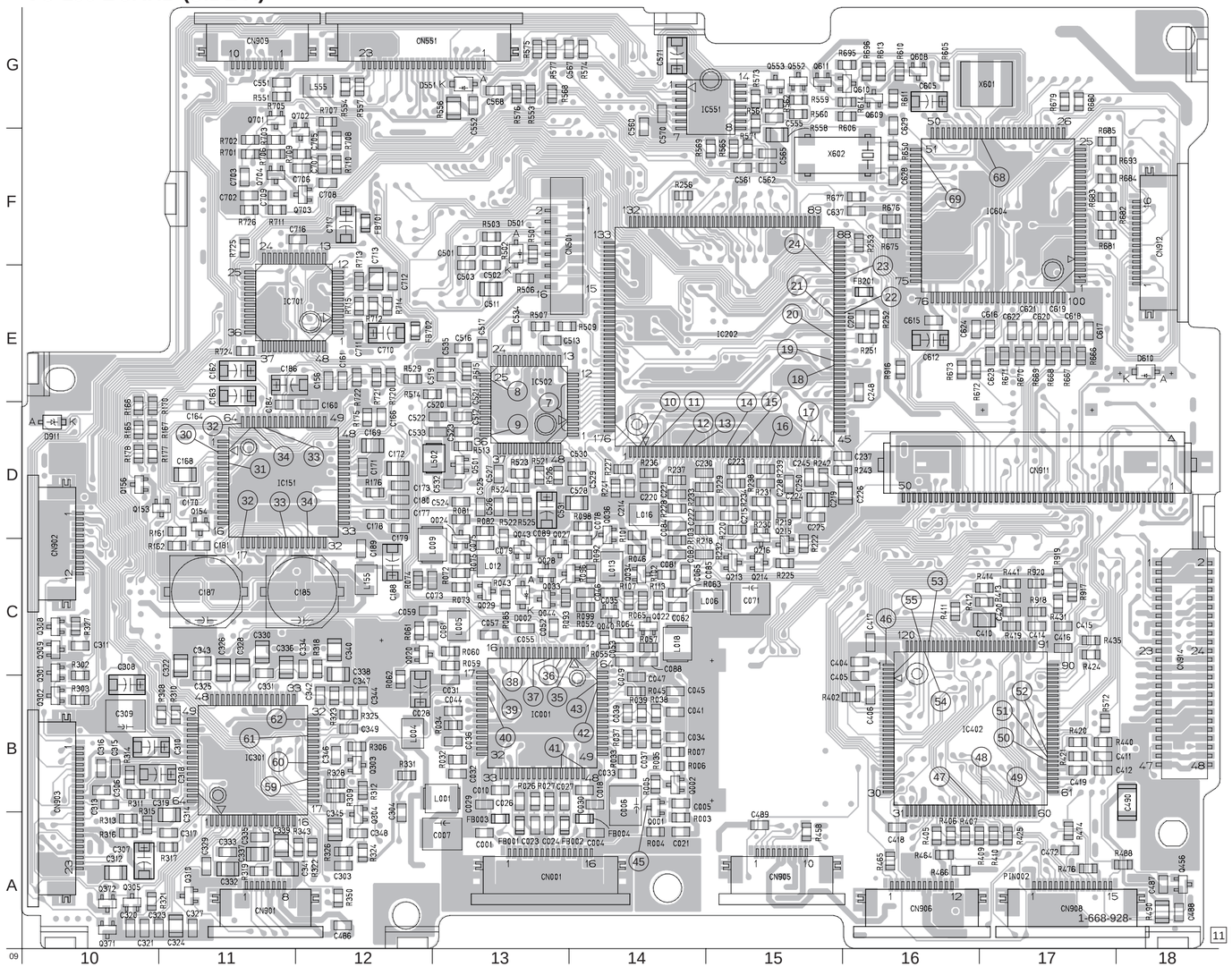

VC-195 BOARD
(SIDE A)

C001	A-13	C328	C-11	CN908	A-17	R074	C-12	R527	B-17
C004	A-14	C330	C-11	CN909	G-11	R075	C-13	R529	E-12
C004	B-13	C331	C-11	CN911	D-17	R081	D-13	R551	G-11
C005	B-14	C332	A-11	CN912	F-18	R082	D-13	R552	G-15
C006	B-14	C333	A-11	CN914	B-18	R085	C-13	R553	G-13
C007	A-13	C334	C-12			R092	C-14	R554	G-12
C010	B-13	C335	A-11	D002	C-13	R093	C-13	R556	G-13
C018	B-14	C336	C-11	D501	F-13	R096	C-14	R557	G-12
C021	A-14	C337	A-11	D551	G-13	R098	D-14	R558	F-15
C023	A-13	C338	B-12	D610	E-18	R099	C-14	R559	G-15
C024	A-13	C339	A-11	D911	D-10	R101	D-14	R560	G-15
C026	B-13	C340	C-12			R102	C-14	R561	G-15
C027	B-13	C341	A-11	FB001	A-13	R103	C-14	R562	G-15
C028	B-12	C342	B-12	FB002	A-13	R107	C-14	R565	F-15
C029	B-13	C343	C-11	FB003	A-13	R113	C-14	R568	G-13
C030	B-14	C344	B-12	FB004	A-14	R161	D-11	R569	F-15
C031	B-13	C345	A-12	FB201	E-16	R162	C-11	R571	F-15
C032	B-13	C346	B-12	FB701	F-12	R165	D-10	R573	G-15
C033	B-14	C347	B-12	FB702	E-12	R166	D-10	R574	G-14
C034	B-14	C348	A-12			R167	D-10	R575	G-13
C035	C-14	C349	B-12	IC001	B-13	R170	D-10	R576	G-13
C036	B-13	C404	C-16	IC151	D-11	R175	D-12	R577	G-13
C037	B-14	C405	B-16	IC202	E-15	R176	D-12	R605	G-16
C039	B-14	C406	B-16	IC301	B-11	R177	D-10	R606	G-16
C041	B-14	C410	C-17	IC402	B-16	R178	D-10	R610	G-16
C045	B-14	C411	B-17	IC502	D-13	R218	D-14	R611	G-16
C046	C-14	C412	B-17	IC551	G-15	R219	D-15	R613	G-16
C047	B-14	C414	C-17	IC701	E-11	R220	D-15	R614	G-16
C049	C-14	C415	C-17			R222	C-15	R650	F-16
C052	C-13	C416	C-17	L001	B-13	R225	C-15	R666	E-17
C053	C-14	C417	C-16	L004	B-12	R227	D-14	R667	E-17
C055	C-13	C418	A-16	L005	C-13	R228	D-14	R668	E-17
C057	C-13	C419	B-17	L006	C-15	R229	D-14	R669	E-17
C059	C-12	C420	C-17	L009	C-13	R230	D-15	R670	E-17
C061	C-13	C472	A-17	L012	C-13	R231	D-15	R671	E-17
C062	C-14	C486	A-12	L013	C-14	R232	C-15	R672	E-16
C065	C-14	C487	A-18	L016	D-14	R233	D-14	R673	E-16
C071	C-15	C488	A-18	L018	C-14	R234	C-15	R675	F-16
C073	C-13	C489	A-15	L155	C-12	R236	D-14	R676	F-16
C075	C-13	C490	B-18	L502	D-13	R237	D-14	R679	G-17
C078	C-14	C501	F-13	L555	G-12	R238	D-15	R680	G-17
C079	C-13	C502	E-13			R239	D-15	R681	F-17
C081	C-14	C503	E-13	Q001	B-14	R241	D-14	R682	F-17
C082	C-14	C511	E-13	Q002	B-14	R242	D-15	R683	F-17
C084	C-14	C512	D-13	Q020	C-12	R243	D-16	R684	F-17
C085	C-14	C513	E-13	Q022	C-14	R251	E-16	R685	F-17
C088	C-14	C516	E-13	Q024	C-13	R252	E-16	R693	F-17
C089	C-13	C517	E-13	Q027	C-13	R253	F-16	R695	G-16
C156	E-12	C519	E-13	Q028	C-13	R256	F-14	R696	G-16
C160	D-12	C520	E-13	Q029	C-13	R302	C-10	R701	F-11
C161	E-12	C521	E-13	Q033	C-14	R303	B-10	R702	F-11
C162	E-11	C522	D-13	Q034	C-14	R306	B-12	R703	F-11
C163	E-11	C523	D-13	Q036	D-14	R308	B-11	R706	F-11
C164	D-11	C524	D-13	Q040	C-14	R309	B-12	R707	G-12
C166	D-12	C525	D-13	Q043	C-13	R310	B-11	R708	F-12
C168	D-11	C526	D-13	Q044	C-13	R311	B-10	R709	F-12
C169	D-12	C527	D-13	Q153	D-11	R312	B-12	R710	F-12
C170	D-11	C528	D-14	Q154	D-11	R313	A10	R711	F-11
C171	D-12	C529	D-14	Q156	D-10	R314	B-10	R712	E-12
C172	D-12	C530	D-14	Q213	C-15	R315	A10	R713	E-12
C173	D-12	C531	D-13	Q214	C-15	R316	A10	R714	E-12
C177	D-12	C532	D-13	Q215	C-15	R317	A-11	R715	E-12
C178	D-12	C533	D-13	Q216	C-15	R318	C-12	R720	E-12
C179	D-12	C534	E-13	Q301	C-10	R319	A-11	R721	E-12
C180	D-12	C535	E-13	Q302	B-10	R321	A10	R722	E-12
C181	C-11	C551	G-11	Q303	B-12	R322	A-12	R724	E-11
C184	D-11	C552	G-13	Q304	A-12	R323	B-12	R725	F-11
C185	C-12	C555	G-15	Q305	A10	R325	B-12	R726	F-11
C186	E-11	C560	F-14	Q308	C-10	R326	A-12	R916	E-16
C187	C-11	C561	F-15	Q309	C-10	R327	C-1	R917	C-17
C188	C-12	C562	F-15	Q310	A-11	R328	B-12	R918	C-17
C189	C-12	C565	F-15	Q329	A-11	R331	B-12	R919	C-17
C201	E-16	C567	G-14	Q371	A10	R343	A-12	R920	C-17
C214	D-14	C568	G-13	Q372	A10	R350	A-12		
C215	D-15	C570	G-14	Q456	A-18	R402	B-16	X601	G-17
C219	D-15	C571	G-14	Q501	D-13	R405	A-16	X602	F-15
C220	D-14	C604	F-17	Q553	G-15	R406	A-16		
C221	D-14	C605	G-16	Q608	G-16	R407	A-16		
C222	D-14	C612	E-16	Q609	G-16	R409	A-16		
C223	D-15	C615	E-16	Q610	G-16	R410	A-17		
C224	D-15	C616	E-17	Q611	G-15	R411	C-16		
C225	D-15	C617	E-17	Q701	G-11	R412	C-17		
C226	D-16	C618	E-17	Q702	F-12	R413	C-17		
C228	D-15	C619	E-17	Q703	F-12	R414	C-17		
C230	D-14	C620	E-17	Q704	F-11	R419	C-17		
C237	D-16	C621	E-17			R420	B-17		
C245	D-15	C622	E-17	R003	A-14	R421	B-17		
C248	E-16	C623	E-17	R004	A-14	R424	C-17		
C250	D-15	C624	E-16	R005	B-14	R425	A-17		
C303	A-12	C628	F-16	R006	B-14	R431	C-17		
C304	A-12	C629	F-16	R007	B-14	R435	C-17		
C306	B-10	C637	F-16	R026	B-13	R440	B-17		
C307	A10	C702	F-11	R027	B-13	R441	C-17		
C308	B-10	C703	F-11	R032	B-13	R458	A-15		
C309	B-10	C705	F-12	R033	B-14	R464	A-16		
C310	B-10	C706	F-12	R034	B-13	R465	A-16		
C311	C-11	C707	F-12	R035	B-14	R466	A-16		
C312	A10	C708	F-12	R037	B-14	R474	A-17		
C313	B-10	C709	F-11	R038	B-14	R476	A-17		
C314	A-11	C710	E-12	R039	B-14	R488	A-18		
C315	B-10	C711	E-12	R043	C-13	R490	A-18		
C316	B-10	C712	E-12	R045	B-14	R501	F-13		
C317	A-11	C713	E-12	R046	C-14	R502	F-13		
C318	B-10	C716	F-12	R052	C-14	R503	F-13		
C319	B-11	C717	F-12	R055	C-14	R507	E-13		
C320	A10			R057	C-14	R509	E-13		
C321	A10	CN001	A-13	R059	C-13	R513	D-13		
C322	C-11	CN501	F-14	R060	C-13	R514	E-13		
C323	A-11	CN551	G-12	R062	B-12	R521	D-13		
C324	A-11	CN901	A-11	R063	C-14	R522	D-13		
C324	A-12	CN902	C-10	R064	C-14	R523	D-13		
C325	C-11	CN903	B-10	R065	C-14	R524	D-13		
C326	C-11	CN905	A-15	R072	C-13	R525	D-13		
C327	A-11	CN906	A-16	R073	C-13	R526	D-13		

VC-195 BOARD (1/10)

1 CAMERA REC

NTSC : 28.636 MHz
PAL : 28.375 MHz
IC501 (5)

2 CAMERA REC

NTSC : 14.32 MHz
PAL : 14.18 MHz
IC501 (11),(12)

3 CAMERA REC
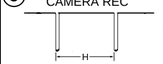

IC501 (25),(26)

4 CAMERA REC
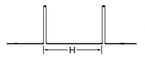

IC501 (28),(31)

5 CAMERA REC
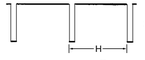

IC501 (44)

6 CAMERA REC
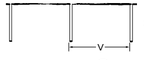

IC501 (45)

7 CAMERA REC
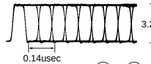

0.14usec
IC502 (2) — (10)

8 CAMERA REC
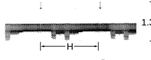

IC502 (26)

9 PB

IC502 (36)

VC-195 BOARD(1/10)

CAMERA1(CH BLOCK)

-REF.NO. : 1.000 SERIES-
XX MARK : NO MOUNT
NO MARK : CAMERA REC mode
* : Can not be measured.

(3INCH/3.5INCH LCD MODEL)
(2.5INCH LCD MODEL)
TO CD-197 BOARD
CD-198 BOARD
CN401
(SEE PAGE 4-9)

CN501 16P
V4 1
V3 2
V2 3
V1 4
GND 5
H2 6
H1 7
RG 8
GND 9
CAM_7.0V 10
VSHT 11
GND 12
CAM_15V 13
GND 14
CCD_OUT 15
GND 16

(510H MODEL)
(760H MODEL)
X501 28.6363MHz (NTSC MODEL)
28.375MHz (PAL MODEL)

IC501
TIMING GENERATOR
IC501 CXD2486R-T4

IC502
S/H, AGC
A/D CONVERTER
IC502 AD9900JCSTRL

Q501
Y GCA
2SB1462J-GR(KB).SO

LINE
CAMERA
LINE CAMERA
(VTR REC MODEL)

L502 22uH (VTR REC MODEL)
0 (PLAYER MODEL)

TO JC-19 BOARD(7/10)
TO VC-195 BOARD(3/10)
TO VC-195 BOARD(10/10)
TO VC-195 BOARD(6/10)
TO VC-195 BOARD(5/10)
TO VC-195 BOARD(4/10)
TO VC-195 BOARD(4/10)

• SIGNAL PATH

	VIDEO SIGNAL		
	CHROMA	Y	Y/CHROMA
REC	→	→	→→
PB	⇨		

NTSC MODEL:EXCEPT CCD-TRV15E/TRV15EP/TRV35E
PAL MODEL:CCD-TRV15E/TRV15EP/TRV35E
510H MODEL:CCD-TRV15/TRV15PK/TRV15E/TRV15EP
760H MODEL:EXCEPT CCD-TRV15/TRV15PK/TRV15E/TRV15EP
VTR REC MODEL:CCD-TRV65/TRV65PK/TRV85/TRV93/TRV615/TRV815
PLAYER MODEL:EXCEPT CCD-TRV65/TRV65PK/TRV85/TRV93/TRV615/TRV815
2.5INCH LCD MODEL:EXCEPT CCD-TRV85/TRV93/TRV815
3INCH/3.5INCH LCD MODEL:CCD-TRV85/TRV93/TRV815

09

• **For schematic diagrams.**
• Refer to page 4–11 for Printed Wiring Board.

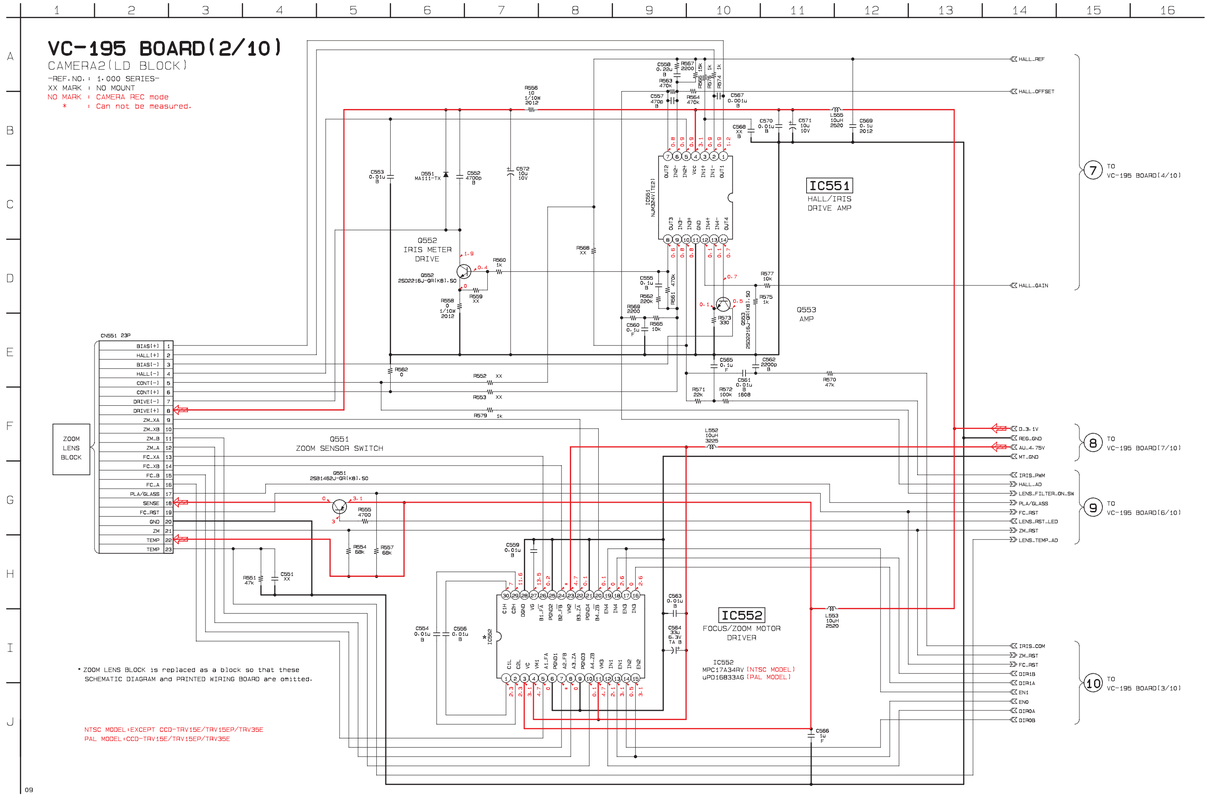

CCD-TRV15/TRV15E/TRV15EP/TRV15PK/TRV25/TRV25PK/TRV35/TRV35E/ TRV65/TRV65PK/TRV85/TRV93/TRV215/TRV615/TRV815

- **For schematic diagrams.**
- Refer to page 4–11 for Printed Wiring Board.

VC-195 BOARD (3/10)

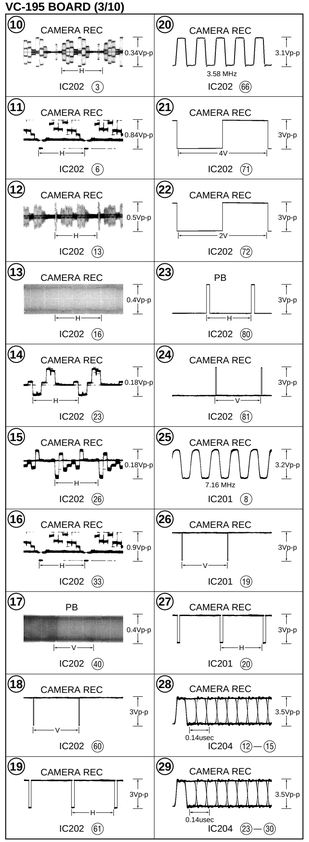

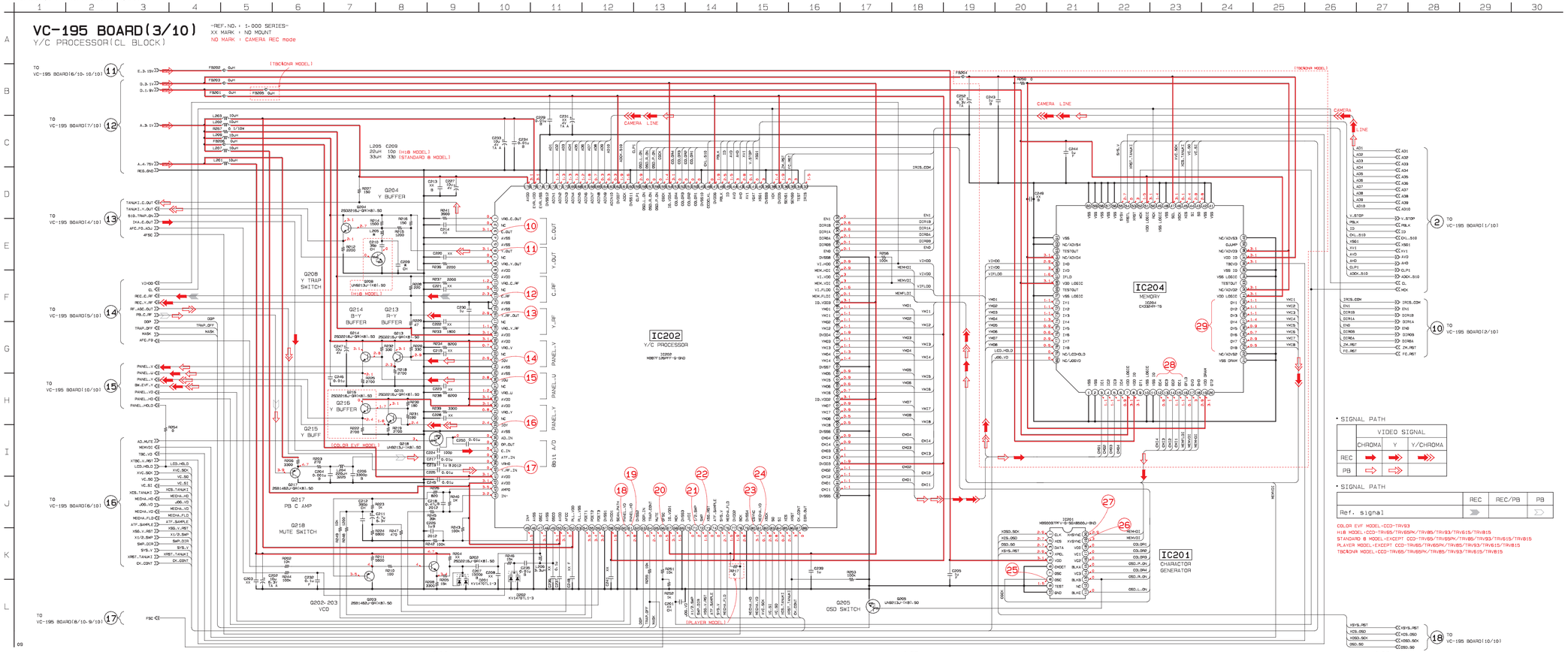

• **For schematic diagrams.**
• Refer to page 4–11 for Printed Wiring Board.

VC-195 BOARD(4/10)

IN/OUT(IO BLOCK)

-REF.NO.: 1-000 SERIES-
XX MARK : NO MOUNT

NO MARK : CAMERA REC mode
* : Can not be measured.

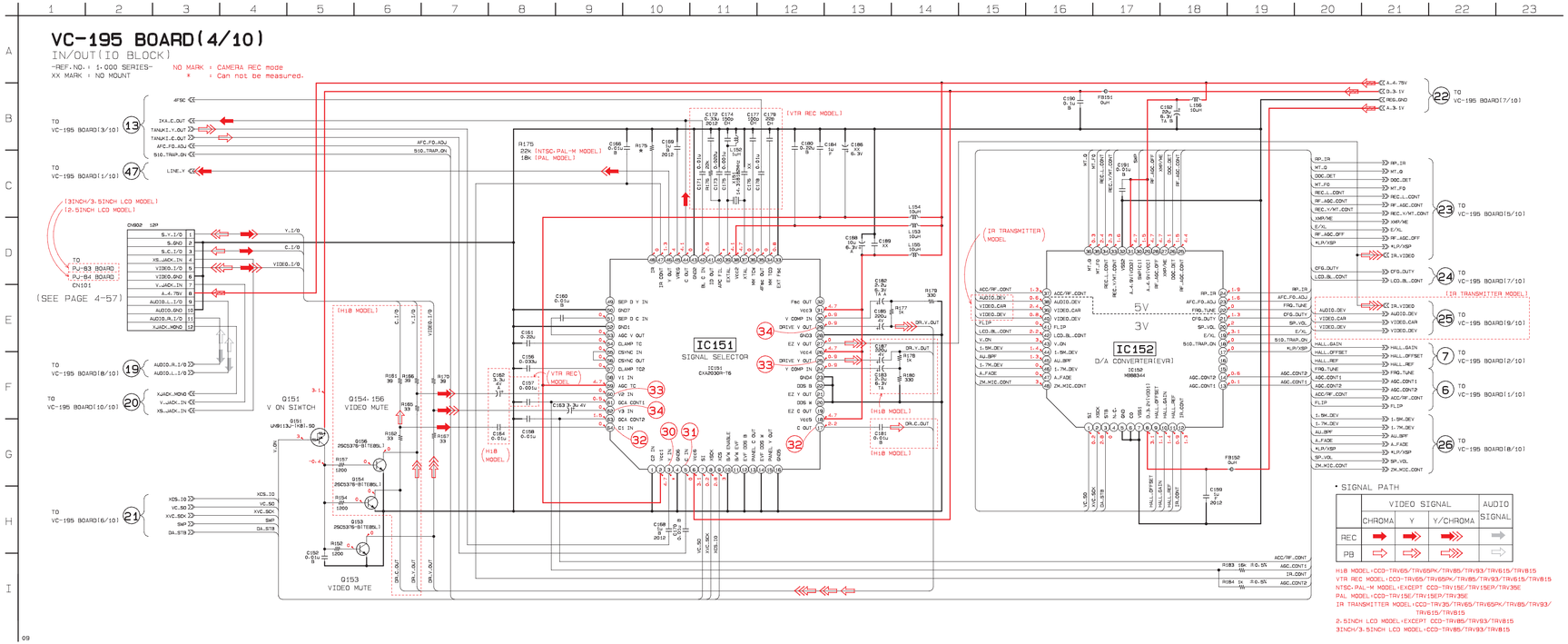

• SIGNAL PATH

	VIDEO SIGNAL			AUDIO SIGNAL
	CHROMA	Y	Y/CHROMA	
REC	➡	➡	➡	⇨
PB	⇨	⇨	⇨	⇨

H1B MODEL:CCD-TRV65/TRV65PK/TRV85/TRV93/TRV615/TRV815
VTR REC MODEL:CCD-TRV65/TRV65PK/TRV85/TRV93/TRV615/TRV815
NTSC-PAL-M MODEL:EXCEPT CCD-TRV15E/TRV15EP/TRV35E
PAL MODEL:CCD-TRV15E/TRV15EP/TRV35E
IR TRANSMITTER MODEL:CCD-TRV35/TRV65/TRV65PK/TRV85/TRV93/TRV815/TRV815
2.5INCH LCD MODEL:EXCEPT CCD-TRV85/TRV93/TRV815
3INCH/3.5INCH LCD MODEL:CCD-TRV85/TRV93/TRV815

VC-195 BOARD (4/10)
CAMERA REC

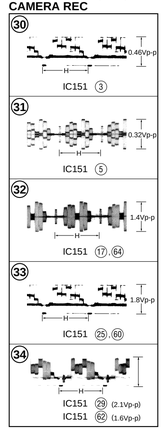

- **For schematic diagrams.**
- Refer to page 4–11 for Printed Wiring Board.

VC-195 BOARD (5/10)

35 CAMERA REC — 0.3Vp-p — IC001 ③

36 CAMERA REC — 0.3Vp-p — IC001 ⑤ TRIG : IC001 ㉑

37 PB — 0.4Vp-p — IC001 ⑦

38 PB — 0.4Vp-p — IC001 ⑪

39 PB — 0.4Vp-p — IC001 ⑰

40 CAMERA REC — 2.9Vp-p — IC001 ㉑

41 CAMERA REC — 3Vp-p — IC001 ㊹, ㊽

42 CAMERA REC — 0.18Vp-p — IC001 ⑥①

43 CAMERA REC — 3Vp-p — IC001 ⑥②

45 CAMERA REC — 7Vp-p — 4.12 MHz — Q001 ⓒ

VC-195 BOARD(5/10)

REC/PB HEAD AMP(RR BLOCK)

–REF.NO. : 1.000 SERIES–
XX MARK : NO MOUNT
NO MARK : CAMERA REC/PB mode
R : CAMERA REC mode
P : PB mode

LND001 LND002 LND003

VIDEO HEAD (5 HEAD MODEL) — LP 2CH, LP 1CH, SP 2CH, FLYING ERASE — (3 HEAD MODEL)

CN001 16P — LRCH 1, LRCH 2, LP1A 3, LP1C 4, GND 5, GND 6, GND 7, GND 8, SP1A 9, SP1C 10, GND 11, SP2A 12, SP2C 13, GND 14, FEY 15, FEX 16

Q001 2SA1965-TL — D001 1SS133 — D002 MA111-TX — D003 UNR213J-(K8).SO

Q004-008 REC/PB LP2 HEAD SWITCH — Q007-009 REC/PB LP1 HEAD SWITCH — Q005-010 REC/PB SP1 HEAD SWITCH — Q006-011 REC/PB SP2 HEAD SWITCH — (5 HEAD MODEL)

Q002 ERASE CURRENT SWITCH — Q001-003 ERASE HEAD OSC — Q012 ERASE HEAD ON SWITCH

Q017 PB RF AMP — 2SC2218(L)-QR(K8).SO

Q019 AGC SLOW SWITCH — UNR213J-(K8).SO

IC001 VIDEO HEAD REC/PB AMP CXA2084R-T6

Q020 BUFFER — 2SD2018(L)-QR(K8).SO

Q021-023 FILTER — 2SD2018(L)-QR(K8).SO

Q025-026 FILTER SWITCH — 2SC4617-(K8).SO

Q024 REC Y AMP — 2SD2018(L)-QR(K8).SO

Q027 AMP — 2SB1462J-QR(K8).SO

Q028-029 TRAP SWITCH — 2SC4617-(K8).SO

Q033 MP/ME FILTER — 2SC4617-(K8).SO

Q034-036 FILTER — 2SB1462J-QR(K8).SO

Q038 SWITCH — UNR213J-(K8).SO

Q040 SWITCH — UNR213J-(K8).SO

Q043 SWITCH — 2SA1965-TL

Q044 MP/ME SWITCH — MA111-TX

Q022 REC C AMP — 2SD2018(L)-QR

Q039 RF AGC AMP — 2SD2018(L)-QR(K8).SO

Q041 PB 4.75V SWITCH — 2SA1362-TB-EL

Q042 REC/PB SWITCH — UNR213J-(K8).SO

Q032 RF AGC OFF SWITCH — UNR213J-(K8).SO

Q030 FILTER — 2SB1462J-QR(K8).SO

Q031 — 2SB1462J-QR(K8).SO

Q035 — 2SB1462J-QR(K8).SO

Q037 — 2SB1462J-QR(K8).SO

Q018 — 2SD2018(L)-QR

Q042 — 2SB1462J-QR(K8).SO

Q044 — UNR213J-(K8).SO

Q045 — UNR213J-(K8).SO

Q046 — UNR213J-(K8).SO

Q047 — UNR213J-(K8).SO

Q048 — UNR213J-(K8).SO

Q049 — UNR213J-(K8).SO

Q050 — UNR213J-(K8).SO

Q051 — UNR213J-(K8).SO

Q052 — UNR213J-(K8).SO

Q053 — UNR213J-(K8).SO

Q054 — UNR213J-(K8).SO

Q055 — UNR213J-(K8).SO

Q056 — UNR213J-(K8).SO

• **For schematic diagrams.**
• Refer to page 4–11 for Printed Wiring Board.

VC-195 BOARD(6/10)

SERVO/SYSTEM CONTROL
(MC BLOCK)

-REF.NO. : 1-000 SERIES-
XX MARK : NO MOUNT
NO MARK : CAMERA REC mode
* : Can not be measured.

TO VC-195 BOARD(8/10) 34
TO VC-195 BOARD(4/10) 21
TO VC-195 BOARD(5/10) 27
TO VC-195 BOARD(3/10) 16
TO VC-195 BOARD(1/10) 5
TO VC-195 BOARD(2/10) 9

TO VC-195 BOARD(7/10) 33
TO VC-195 BOARD(7/10) 35
TO VC-195 BOARD(10/10) 36
TO VC-195 BOARD(8/10) 37
TO VC-195 BOARD(3/10,10/10) 11

IC402
SERVO/SYSTEM CONTROL
IC402
M99181MFP-6-GN0-ER

IC401
EEP ROM
IC401
AK6480AM-EP

• SIGNAL PATH

	REC	REC/PB	PB
Drum speed servo		➤	
Drum phase servo		➤	
Drum servo(speed and phase)		➤	
Capstan speed servo		➤	
Capstan servo(speed and phase)		➤	

* MARKED•MOUNT TABLE

Model / Ref.No.	TYPE A	TYPE B	TYPE C	TYPE D	TYPE E	TYPE F	TYPE G
R917	22k	22k	22k	22k	47k	22k	22k
R919	56k	100k	47k	22k	100k	100k	100k
R920	68k	XX	100k	100k	XX	47k	22k

TYPE A MODEL•CCD-TRV15/TRV15PK
TYPE B MODEL•CCD-TRV65/TRV65PK/TRV85/TRV615/TRV815
TYPE C MODEL•CCD-TRV25/TRV25PK/TRV215
TYPE D MODEL•CCD-TRV35
TYPE E MODEL•CCD-TRV93
TYPE F MODEL•CCD-TRV35E
TYPE G MODEL•CCD-TRV15E/TRV15EP

VC-195 BOARD (6/10)
CAMERA REC

46 1.7Vp-p 20 MHz IC402 1
47 3Vp-p 2V IC402 47
48 3Vp-p 4V IC402 48
49 3Vp-p 2V IC402 55, 57
50 3Vp-p 13usec IC402 68
51 3Vp-p 13usec IC402 69
52 3Vp-p 13usec IC402 70
53 3Vp-p 1.2msec IC402 115
54 3Vp-p 2.8msec IC402 116
55 3Vp-p 2V IC402 117

• **For schematic diagrams.**
• Refer to page 4–11 for Printed Wiring Board.

VC-195 BOARD (7/10)

SERVO (SB BLOCK)

-REF. NO. : 1,000 SERIES-
XX MARK : NO MOUNT
NO MARK : CAMERA REC mode
* : Can not be measured.

• SIGNAL PATH

	REC	REC/PB	PB
Drum speed servo		▶	
Drum phase servo		▶	
Drum servo (speed and phase)		▶▶	
Capstan phase servo		▶	
Capstan servo (speed and phase)		▶▶	

NTSC MODEL : EXCEPT CCD-TRV15E/TRV15EP/TRV25E
PAL MODEL : CCD-TRV15E/TRV15EP/TRV35E
IR TRANSMITTER MODEL : EXCEPT CCD-TRV15/TRV15E/TRV15EP/TRV25/TRV25PK/TRV215/TRV35E

TO VC-195 BOARD (5/10) 31
TO VC-195 BOARD (6/10) 33
TO VC-195 BOARD (4/10) 24
TO VC-195 BOARD (10/10) 38

MECHA DECK

S901 MODE SW
M903 LOADING MOTOR
FP-220 (FLEXIBLE)
M901 DRUM MOTOR
FP-248 (FLEXIBLE)
M902 CAPSTAN MOTOR
DEW SENSOR
FP-356 (FLEXIBLE)
Q002 TAPE END
Q001 TAPE TOP
S REEL DETECT
FP-249 (FLEXIBLE)
T REEL DETECT
S002
Q003 TAPE LED
FP-355 (FLEXIBLE)
FP-221 (FLEXIBLE)

IC451
DRUM MOTOR DRIVER
DRUM PG/FG WAVEFORM SHAPER

IC452
LOADING MOTOR DRIVE SENSOR AMP

Q454, 455
CAPSTAN ERROR AMP

Q452, 453
DRUM MOTOR ON SWITCH

IC452
LB8112Y-TLM (NTSC MODEL)
TA8482FN-EL (PAL MODEL)

Q456
TAPE LED ON/OFF SWITCH

R482 10k (NTSC MODEL) 5.6k
R472 10k (NTSC MODEL) 22k (PAL MODEL)

TO DD-105 BOARD CN931 (SEE PAGE 4-121)

CN914 48P

1	SHOE_GND
2	SHOE_GND
3	SHOE_GND
4	SHOE_UNREG
5	SHOE_UNREG
6	SHOE_UNREG
7	EVF_BL_4.75V
8	BATT/NEXT
9	FAST_CHARGE
10	DC_PACK_SW
11	INIT_CHARGE_ON
12	VTR_UNREG
13	EVF_4.75V
14	CAM_15V
15	EVF_BL_GND
16	VTR_DD_ON
17	CAM_DD_ON
18	EVF_13.5V
19	BATT_UNREG
20	EVF_DD_ON
21	CAM_-7.0V
22	LCD_DD_ON
23	BL_CONT
24	MT_4.75V
25	D.1.9V
26	D.-1.9V
27	A.3.1V
28	A.-3.1V
29	AU.4.75V
30	D.3.1V
31	A.-4.75V
32	A.4.75V
33	AU.3.1V
34	RP.4.75V
35	RP.4.75V
36	REG_GND
37	REG_GND
38	REG_GND
39	REG_GND
40	MT_GND
41	MT_GND
42	MT_GND
43	DRUM_ERROR
44	CAP_ERROR
45	CAP_VS
46	CAP_VS
47	DRUM_VS
48	DRUM_VS

TO VC-195 BOARD (1/10) 1 : REG_GND, A.4.75V, D.3.1V, A.3.1V, CAM_-7.0V, CAM_15V
TO VC-195 BOARD (2/10) 8 : REG_GND, D.3.1V, AU.4.75V, MT_GND
TO VC-195 BOARD (3/10) 12 : REG_GND, A.4.75V, D.3.1V, A.3.1V, D.1.9V
TO VC-195 BOARD (4/10) 22 : REG_GND, A.4.75V, D.3.1V, A.3.1V
TO VC-195 BOARD (5/10) 29 : REG_GND, A.4.75V, D.3.1V, RP.4.75V, EVF_BL_4.75V
TO VC-195 BOARD (6/10) 35 : REG_GND, D.3.1V, MT_GND, MT_4.75V

TO VC-195 BOARD (10/10) 41 : EVF_BL_4.75V, VTR_UNREG, D.3.1V, REG_GND, SHOE_GND, BATT_UNREG, EVF_4.75V, EVF_BL_GND, EVF_13.5V
TO VC-195 BOARD (9/10) 40 : A.-4.75V, REG_GND (IR TRANSMITTER MODEL)
TO VC-195 BOARD (8/10) 39 : VTR_UNREG, A.3.1V, AU.3.1V, A.4.75V, AU.4.75V, REG_GND, MT_4.75V

TO VC-195 BOARD (7/10) CAMERA REC

56 : 1.2Vp-p, 5.6msec, IC451 1, 2, 29
57 : 3Vp-p, 2V, IC451 11
58 : 3Vp-p, 2.8msec, IC451 18

• **For schematic diagrams.**
• Refer to page 4–11 for Printed Wiring Board.

VC-195 BOARD(8/10)

AUDIO(AU BLOCK)

-REF.NO. : 1-000 SERIES-
XX MARK : NO MOUNT
NO MARK : CAMERA REC mode

• SIGNAL PATH

	VIDEO SIGNAL			AUDIO SIGNAL
	CHROMA	Y	Y/CHROMA	
REC				
PB				

2.5INCH LCD1 MODEL:CCD-TRV35
2.5INCH LCD2 MODEL:CCD-TRV15/TRV15PK/TRV15E/TRV15EP/TRV25/TRV25PK/TRV35E/TRV65/TRV65PK/TRV215/TRV615
3INCH/3.5INCH LCD MODEL:CCD-TRV85/TRV93/TRV815
STEREO MODEL:CCD-TRV65/TRV65PK/TRV85/TRV93/TRV615/TRV815
MONAURAL MODEL:EXCEPT CCD-TRV65/TRV65PK/TRV85/TRV93/TRV615/TRV815

VC-195 BOARD (8/10)

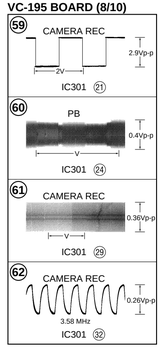

• **For schematic diagrams.**
• Refer to page 4–11 for Printed Wiring Board.

VC-195 BOARD (9/10)
PB

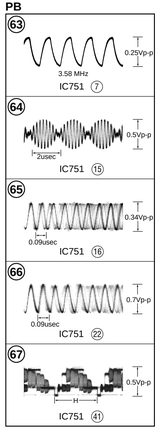

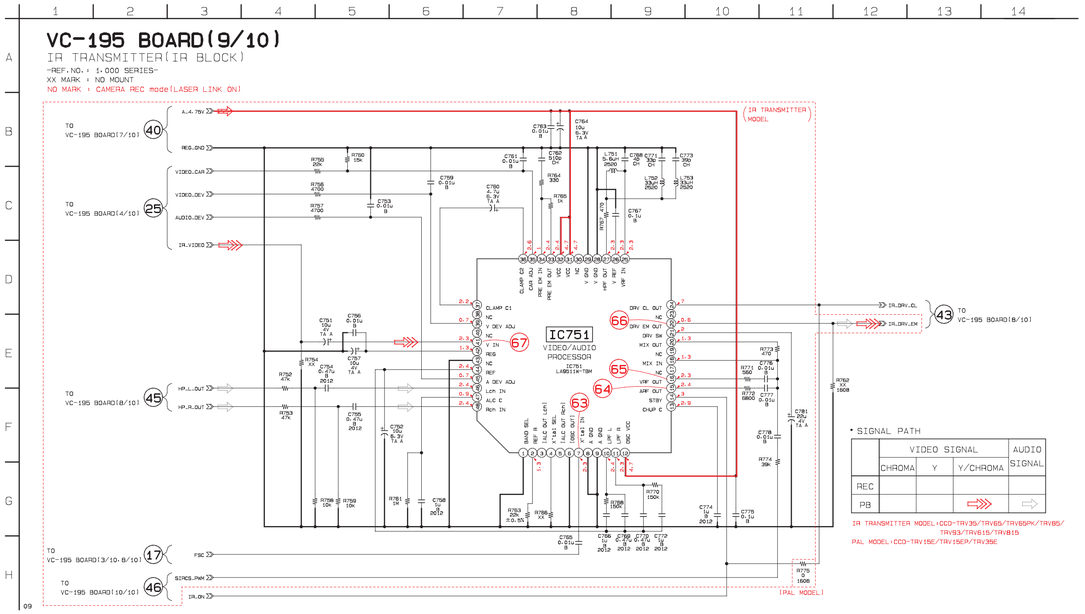

VC-195 BOARD (10/10)

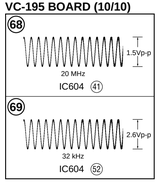

• **For schematic diagrams.**
• Refer to page 4–11 for Printed Wiring Board.
• Refer to page 4–48 for Waveforms.

VC-195 BOARD (10/10)

MODE CONTROL (HI BLOCK)

-REF. NO. : 1-000 SERIES-
XX MARK : NO MOUNT
NO MARK : CAMERA REC mode

IC602 INITIAL RESET BACKUP VCC

IC603 LANC IN/OUT

IC604 MODE CONTROL
IC604
SS7301SPC-TEB

Q607 BATTERY CHARGE DETECTOR

Q610 SWITCH

Q619 SWITCH

Q620 LANC ON SWITCH

Q608 BUFFER

Q609 BUFFER

Q611 SWITCH

[IR TRANSMITTER MODEL]

[STEREO MODEL]

[MONAURAL MODEL]

TO VC-195 BOARD(8/10) 44

TO VC-195 BOARD(5/10) 30

INTELLIGENT ACCESSORY SHOE/ VIDEO LIGHT MODEL

INTELLIGENT ACCESSORY SHOE MODEL

VIDEO LIGHT MODEL

INTELLIGENT ACCESSORY SHOE

TO VC-195 BOARD(3/10) 15

TO VC-195 BOARD(1/10) 3

TO VC-195 BOARD(3/10) 18

TO VC-195 BOARD(4/10) 20

TO VC-195 BOARD(7/10) 42

TO VC-195 BOARD(5/10) 32

TO VC-195 BOARD(3/10.6/10) 11

TO VC-195 BOARD(6/10) 36

TO VC-195 BOARD(9/10) 46

TO VC-195 BOARD(7/10) 38

TO VC-195 BOARD(7/10) 41

{VIDEO LIGHT MODEL}
TO VL-19 BOARD CN151
{SEE PAGE 4-63}
FP-633 FLEXIBLE

{2.5INCH LCD MODEL}
TO CF-50 BOARD CN001
{SEE PAGE 4-67}
TO CF-51 BOARD CN001
{SEE PAGE 4-70}
{3INCH/3.5INCH LCD MODEL}

• SIGNAL PATH

	VIDEO SIGNAL			AUDIO SIGNAL
	CHROMA	Y	Y/CHROMA	
REC	⇨	⇨		⇨
PB	⇨	⇨		⇨

2.5INCH LCD MODEL+EXCEPT CCD-TRV85/TRV93/TRV815
3INCH/3.5INCH LCD MODEL+CCD-TRV85/TRV93/TRV815
STEREO MODEL+CCD-TRV65/TRV65PK/TRV85/TRV93/TRV615/TRV815
MONAURAL MODEL+EXCEPT CCD-TRV65/TRV65PK/TRV85/TRV93/TRV615/TRV815
IR TRANSMITTER MODEL+CCD-TRV35/TRV65/TRV65PK/TRV85/TRV93/TRV615/TRV815
INTELLIGENT ACCESSORY SHOE MODEL+CCD-TRV65/TRV65PK/TRV85/TRV615/TRV815
VIDEO LIGHT MODEL+CCD-TRV93

TO DD-105 BOARD CN932
{SEE PAGE 4-124}

SE-66/67 (STEADY SHOT) (2.5 INCH LCD, 3 INCH/3.5 INCH LCD MODEL) PRINTED WIRING BOARD

– Ref No. SE-66 BOARD: 4,000 series, SE-67 BOARD: 9,000 series –

SE-67 BOARD (SIDE B)
SE-66 BOARD (SIDE B)

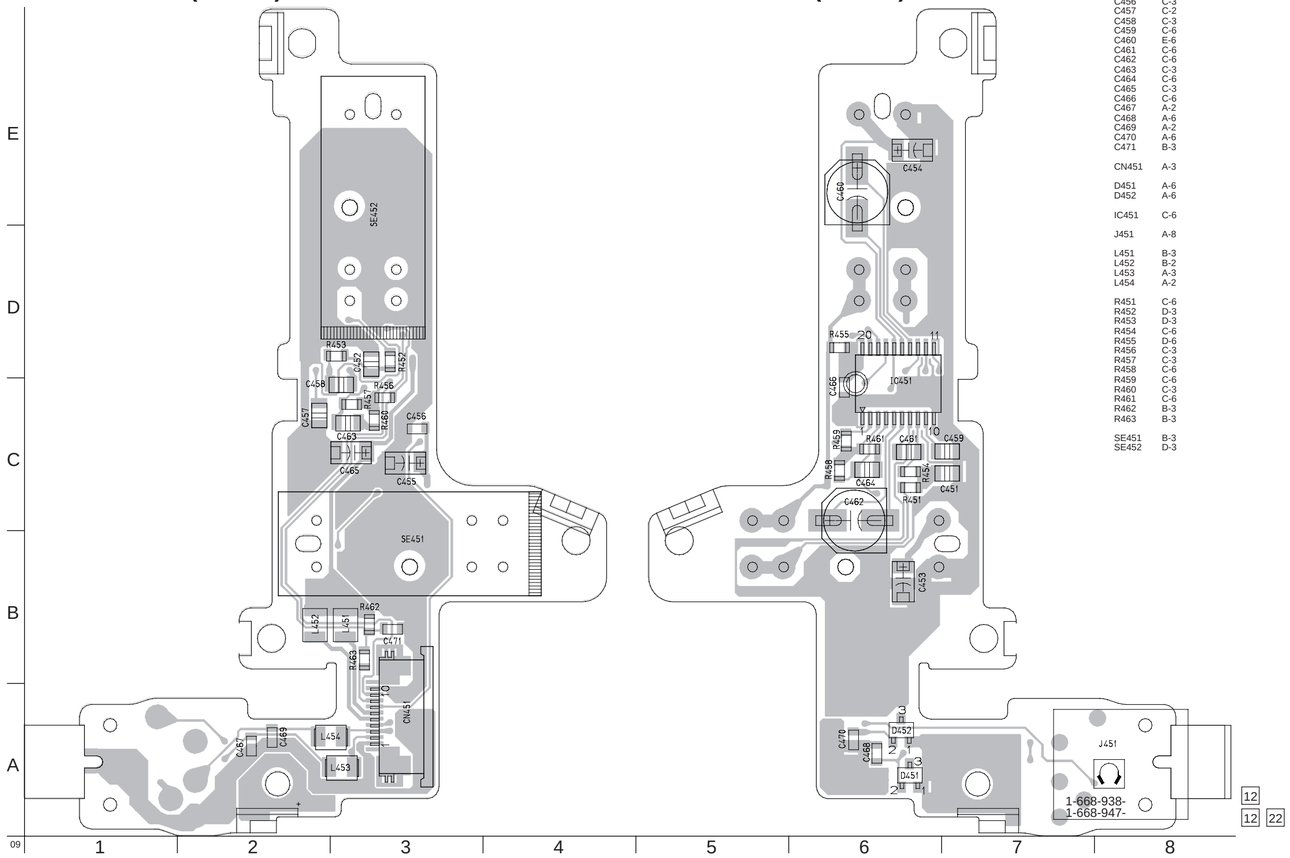

SE-67 BOARD (SIDE A)
SE-66 BOARD (SIDE A)

SE-66
SE-67 BOARD

C451	C-6
C452	D-3
C453	B-6
C454	E-6
C455	C-3
C456	C-3
C457	C-2
C458	C-3
C459	C-6
C460	E-6
C461	C-6
C462	C-6
C463	C-3
C464	C-6
C465	C-3
C466	C-6
C467	A-2
C468	A-6
C469	A-2
C470	A-6
C471	B-3
CN451	A-3
D451	A-6
D452	A-6
IC451	C-6
J451	A-8
L451	B-3
L452	B-2
L453	A-3
L454	A-2
R451	C-6
R452	D-3
R453	D-3
R454	C-6
R455	D-6
R456	C-3
R457	C-3
R458	C-6
R459	C-6
R460	C-3
R461	C-6
R462	B-3
R463	B-3
SE451	B-3
SE452	D-3

• **For Printed Wiring Boards.**

There are few cases that the part isn't mounted in this model is printed on this diagram.

• Chip diode

SE-66 BOARD (2.5INCH LCD MODEL)
SE-67 BOARD (3INCH/3.5INCH LCD MODEL)

STEADY SHOT

-REF.NO. : SE-66 BOARD:4,000.SE-67 BORAD:9,000 SERIES-
XX MARK : NO MOUNT
NO MARK : CAMERA REC mode

• SIGNAL PATH

	AUDIO SIGNAL
REC	
PB	⇨

2.5INCH LCD MODEL:EXCEPT CCD-TRV85/TRV93/TRV815
3INCH/3.5INCH LCD MODEL:CCD-TRV93/TRV85/TRV815
STEADY SHOT MODEL:EXCEPT CCD-TRV15/TRV15PK/TRV15E/TRV15EP
STEREO MODEL:CCD-TRV65/TRV65PK/TRV85/TRV93/TRV615/TRV815

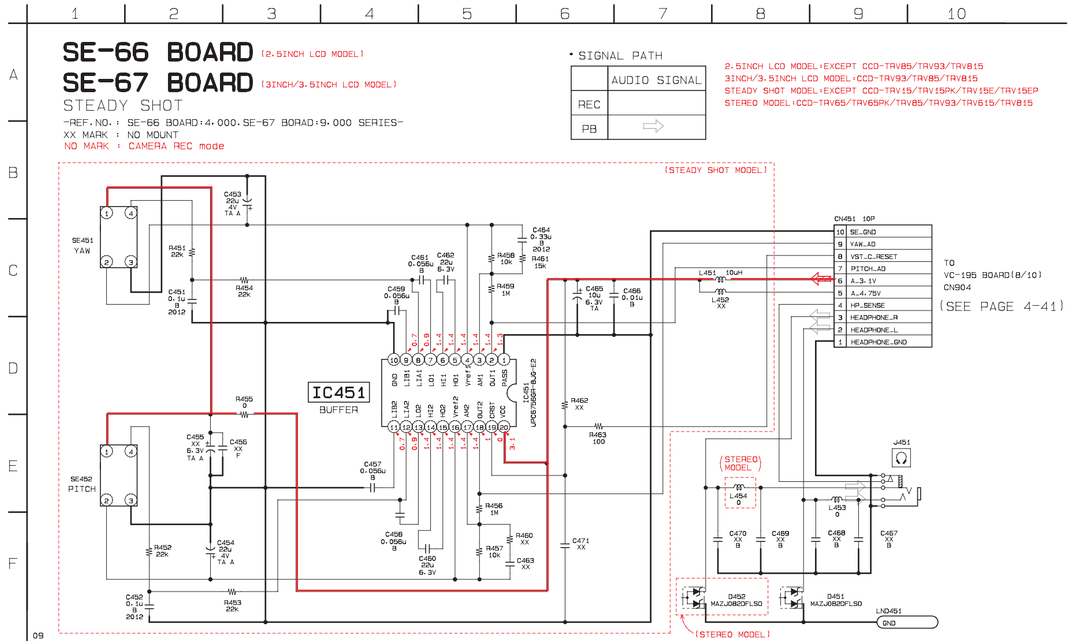

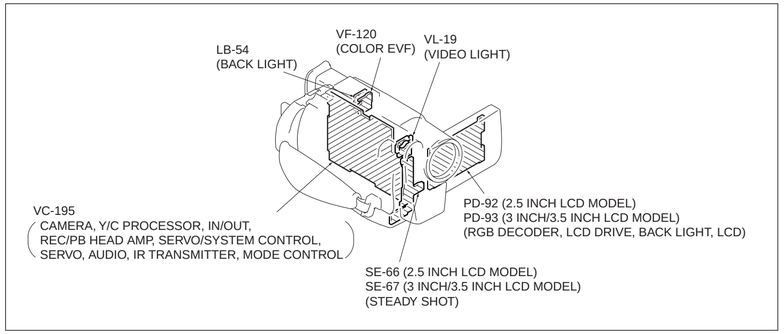

PJ-83/84 (AV IN/OUT) (2.5 INCH LCD, 3 INCH/3.5 INCH LCD MODEL) PRINTED WIRING BOARD

– Ref No. PJ-83 BOARD: 4,000 series, PJ-84 BOARD: 9,000 series –

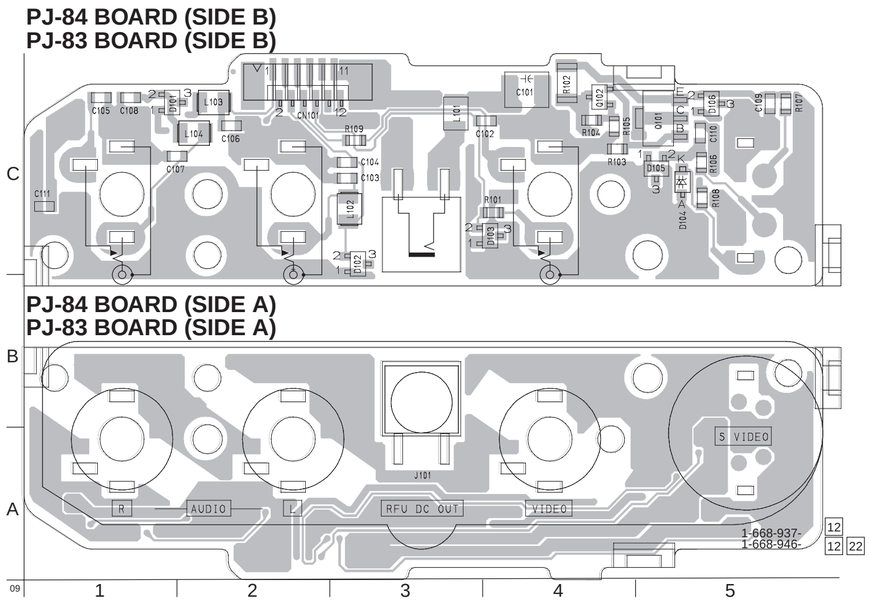

PJ-83
PJ-84 BOARD

C101	C-4
C102	C-4
C103	C-3
C104	C-3
C105	C-1
C106	C-2
C107	C-1
C108	C-1
C109	C-5
C110	C-5
C111	C-1
CN101	C-2
D101	C-1
D102	C-3
D103	C-4
D105	C-5
D106	C-5
D107	C-5
J101	A-3
L101	C-3
L102	C-3
L103	C-2
L104	C-2
Q101	C-5
Q102	C-4
R101	C-4
R102	C-4
R103	C-4
R104	C-4
R105	C-4
R106	C-5
R107	C-5
R108	C-5
R109	C-3

• For Printed Wiring Boards.

There are few cases that the part isn't mounted in this model is printed on this diagram.

• Chip diode

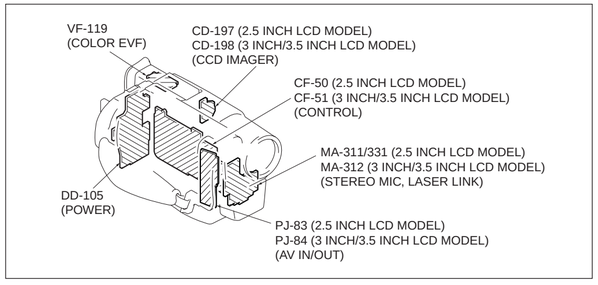

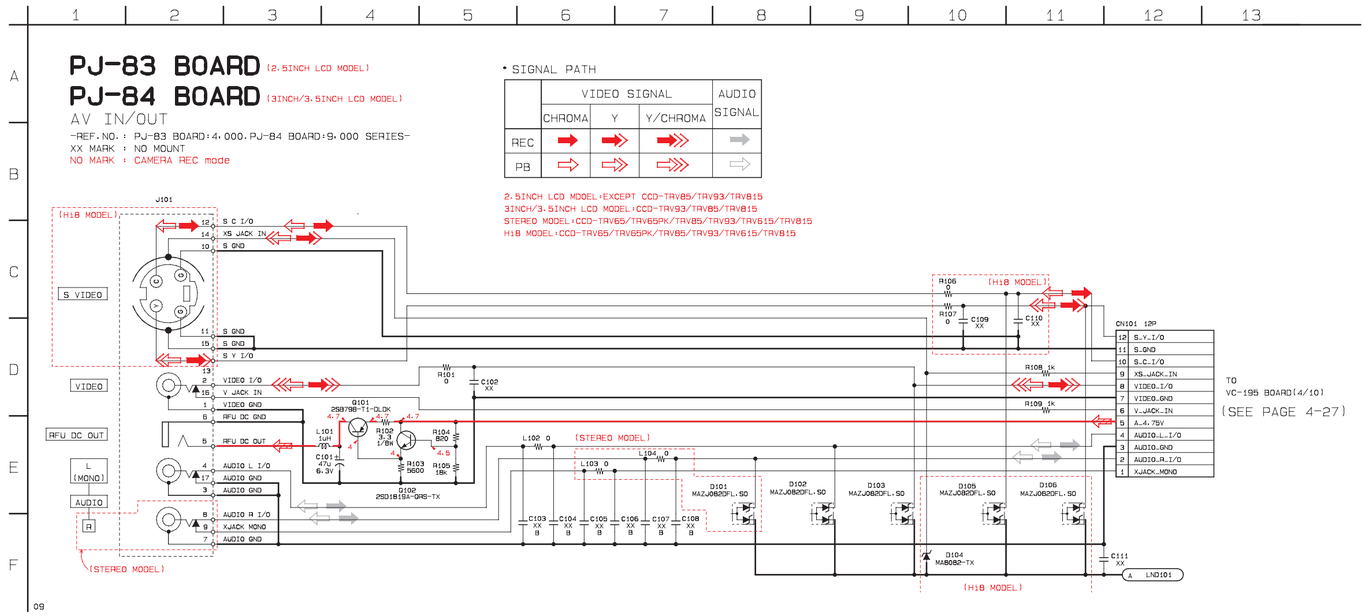

MA-311/331 (STEREO MIC, LASER LINK) (2.5 INCH LCD MODEL) PRINTED WIRING BOARDS

– Ref No. MA-311 BOARD: 3,000 series, MA-331 BOARD: 4,000 series –

MA-311/331 BOARD (SIDE B)

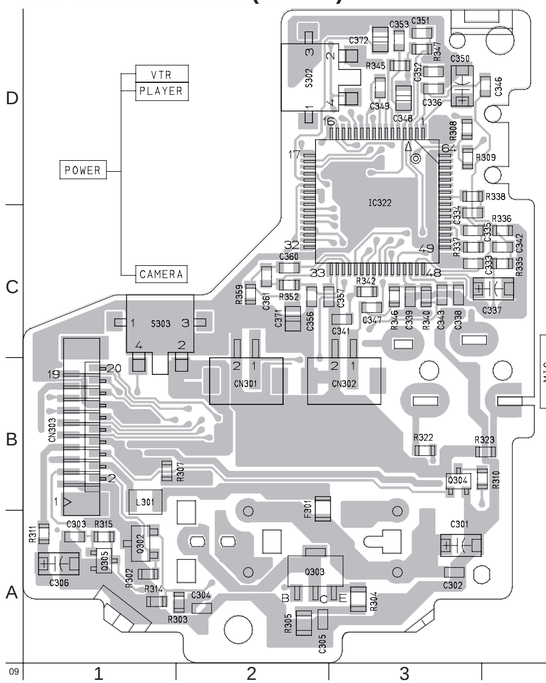

MA-311/331 BOARD (SIDE A)

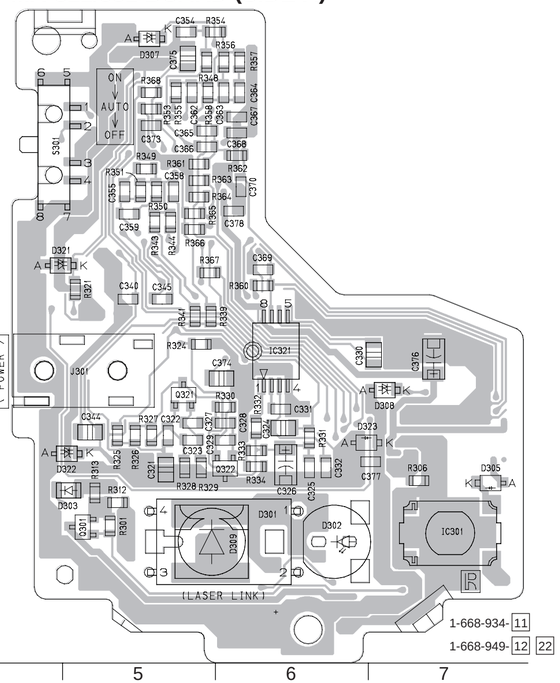

1-668-934-11
1-668-949-12 22

MA-331
MA-311 BOARD

C301	A-3	C344	B-5	C373	D-5	Q301	A-5	R327	B-5	R356	D-6
C302	A-3	C345	C-5	C374	B-6	Q302	A-1	R328	B-5	R357	D-6
C303	A-1	C346	D-4	C375	D-5	Q303	A-2	R329	B-5	R358	D-5
C304	A-2	C347	C-3	C376	B-7	Q304	B-3	R330	B-6	R359	C-2
C305	A-2	C348	D-3	C377	B-6	Q305	A-1	R331	B-6	R360	C-6
C306	A-1	C349	D-3	C378	C-6	Q321	B-5	R332	B-6	R361	D-5
C321	B-5	C350	D-3			Q322	B-6	R333	B-6	R362	D-6
C322	B-5	C351	D-3	CN301	B-2			R334	B-6	R363	D-5
C323	B-5	C352	D-3	CN302	B-3	R301	A-5	R335	C-4	R364	D-5
C324	B-6	C353	D-3	CN303	B-1	R302	A-1	R336	C-4	R365	C-5
C325	B-6	C354	D-5			R303	A-2	R337	C-3	R366	C-5
C326	B-6	C355	D-5	D301	A-6	R304	A-3	R338	D-3	R367	C-5
C327	B-5	C356	C-2	D302	A-6	R305	A-2	R339	C-5	R368	D-5
C328	B-6	C357	C-2	D303	B-5	R306	B-7	R340	C-3		
C329	B-6	C358	D-5	D305	B-7	R307	B-1	R341	C-5	S301	D-4
C330	C-7	C359	C-5	D307	D-5	R308	D-3	R342	C-3	S302	D-2
C331	B-6	C360	C-2	D308	B-7	R309	D-3	R343	C-5	S303	C-1
C332	B-6	C361	C-2	D309	A-5	R310	B-3	R344	C-5		
C333	C-3	C362	D-5	D322	B-5	R311	A-1	R345	D-3		
C334	C-3	C363	D-6	D323	B-6	R312	B-5	R346	C-3		
C335	C-3	C364	D-6			R313	B-5	R347	D-3		
C336	D-3	C365	D-5	IC301	A-7	R314	A-1	R348	D-5		
C337	C-4	C366	D-5	IC321	C-6	R315	A-1	R349	D-5		
C338	C-3	C367	D-6	IC322	D-3	R321	C-5	R350	D-5		
C339	C-3	C368	D-6			R322	B-3	R351	D-5		
C340	C-5	C369	C-6	J310	B-5	R323	A-4	R352	C-2		
C341	C-3	C370	D-6			R324	C-5	R353	D-5		
C342	C-4	C371	C-2	L301	B-1	R325	B-5	R354	D-5		
C343	C-3	C372	D-3			R326	B-5	R355	D-5		

• For Printed Wiring Boards.

There are few cases that the part isn't mounted in this model is printed on this diagram.

• Chip transistor

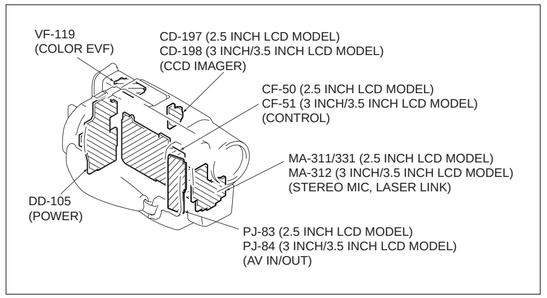

MA-312 (STEREO MIC, LASER LINK) (3 INCH/3.5 INCH LCD MODEL) PRINTED WIRING BOARD

– Ref No. MA-312 BOARD: 9,000 series –

MA-312 BOARD (SIDE B)

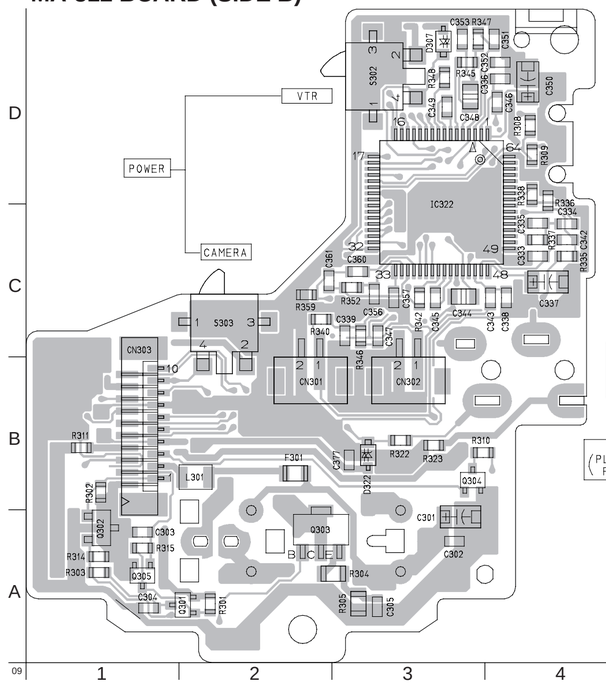

MA-312 BOARD (SIDE A)

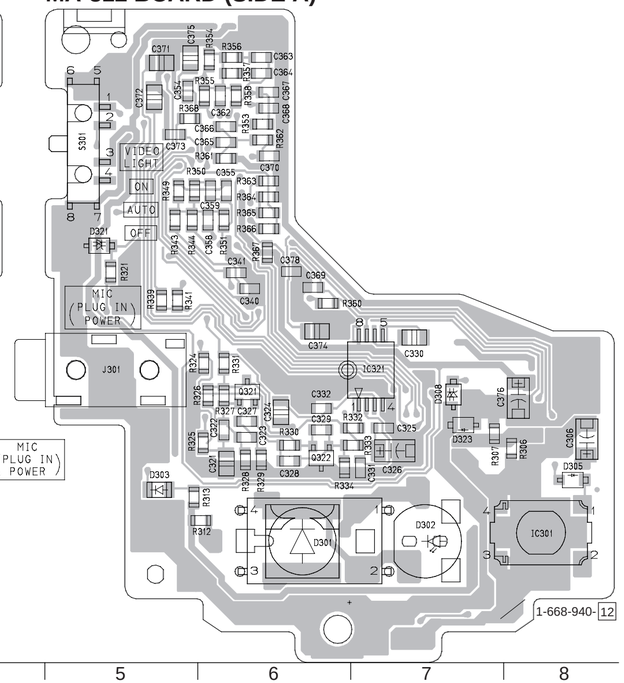

1-668-940-12

MA-312 BOARD

C301	A-3	C345	C-3	C375	D-5	Q302	A-1	R329	B-6	R359	C-2
C302	A-3	C346	D-4	C376	B-8	Q303	A-2	R330	B-6	R360	C-6
C303	A-1	C347	C-3	C377	B-3	Q304	B-3	R331	B-6	R361	D-6
C304	A-1	C348	D-3	C378	C-6	Q305	A-1	R332	B-7	R362	D-6
C305	A-3	C349	D-3			Q321	B-6	R333	B-7	R363	D-6
C306	B-8	C350	D-4	CN301	B-2	Q322	B-6	R334	B-6	R364	D-6
C321	B-6	C351	D-4	CN302	B-3			R335	C-4	R365	C-6
C322	B-6	C352	D-4	CN303	B-1	R301	A-2	R336	D-4	R366	C-6
C323	B-6	C353	D-3			R302	B-1	R337	C-4	R367	C-6
C324	B-6	C354	D-5	D301	A-6	R303	A-1	R338	D-4	R368	D-5
C325	B-7	C355	D-6	D302	A-7	R304	A-3	R339	C-5		
C326	B-7	C356	C-3	D303	B-5	R305	A-3	R340	C-2	S301	D-5
C327	B-6	C357	C-3	D305	B-8	R306	B-8	R341	C-5	S302	D-3
C328	B-6	C358	C-6	D307	D-3	R307	B-7	R342	C-3	S303	C-2
C329	B-6	C359	D-6	D308	B-7	R308	D-4	R343	C-5		
C330	C-7	C360	C-3	D321	C-5	R309	D-4	R344	C-5		
C331	B-7	C361	C-2	D322	B-3	R310	B-3	R345	D-3		
C332	B-6	C362	D-6	D323	B-7	R311	B-1	R346	C-3		
C333	C-4	C363	D-6			R312	A-6	R347	D-3		
C334	C-4	C364	D-6	F301	B-2	R313	B-6	R348	D-3		
C335	C-4	C365	D-6			R314	A-1	R349	D-5		
C336	D-4	C366	D-6	IC301	A-8	R315	A-1	R350	D-5		
C337	C-4	C367	D-6	IC321	B-7	R321	C-5	R351	C-6		
C338	C-4	C368	D-6	IC332	C-3	R322	B-3	R351	D-6		
C339	C-3	C369	C-6			R323	B-3	R352	C-3		
C340	C-6	C370	D-6	J301	B-5	R324	B-6	R353	D-6		
C341	C-6	C371	D-5			R325	B-6	R354	D-6		
C342	C-4	C372	D-5	L301	B-2	R326	B-6	R355	D-6		
C343	C-4	C373	D-5			R327	B-6	R356	D-6		
C344	C-3	C374	C-6	Q301	A-2	R328	B-6	R358	D-6		

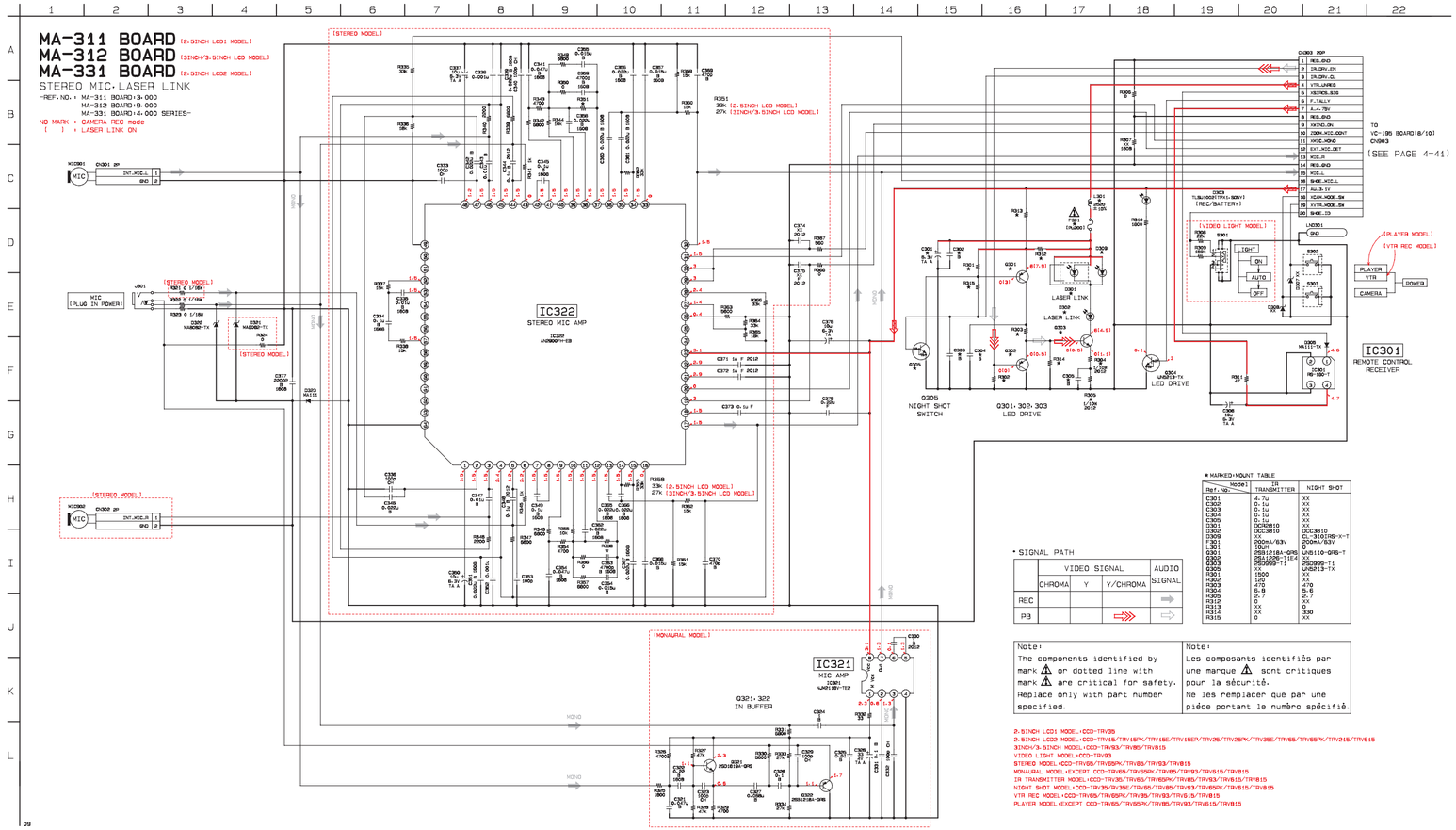

• SIGNAL PATH

	VIDEO SIGNAL			AUDIO SIGNAL
	CHROMA	Y	Y/CHROMA	
REC				⇒
PB			⇒	⇨

Note:
The components identified by mark ⚠ or dotted line with mark ⚠ are critical for safety. Replace only with part number specified.

Note:
Les composants identifiés par une marque ⚠ sont critiques pour la sécurité. Ne les remplacer que par une pièce portant le numéro spécifié.

2.5INCH LCD1 MODEL:CCD-TRV35
2.5INCH LCD2 MODEL:CCD-TRV15/TRV15PK/TRV15E/TRV15EP/TRV25/TRV25PK/TRV35E/TRV65/TRV65PK/TRV215/TRV615
3INCH/3.5INCH MODEL:CCD-TRV93/TRV85/TRV815
VIDEO LIGHT MODEL:CCD-TRV93
STEREO MODEL:CCD-TRV65/TRV65PK/TRV85/TRV93/TRV815
MONAURAL MODEL:EXCEPT CCD-TRV65/TRV65PK/TRV85/TRV93/TRV815/TRV815
IR TRANSMITTER MODEL:CCD-TRV35/TRV65/TRV65PK/TRV85/TRV93/TRV815/TRV815
NIGHT SHOT MODEL:CCD-TRV35/RV35E/TRV65/TRV65PK/TRV85/TRV93/TRV65PK/TRV815/TRV815
VTR REC MODEL:CCD-TRV65/TRV65PK/TRV85/TRV93/TRV815/TRV815
PLAYER MODEL:EXCEPT CCD-TRV65/TRV65PK/TRV85/TRV93/TRV815/TRV815

• **For Printed Wiring Boards.**

There are few cases that the part isn't mounted in this model is printed on this diagram.

• Chip transistor

VL-19 BOARD

C151	A-4
C152	A-1
C153	A-1
CN151	A-1
D151	A-2
D152	A-4
D153	A-4
L151	A-4
Q151	A-4
Q152	A-1
R151	A-1
R152	A-1
R153	A-1
R154	A-1

VL-19 (VIDEO LIGHT) PRINTED WIRING BOARD

– Ref No. VL-19 BOARD: 9,000 series –

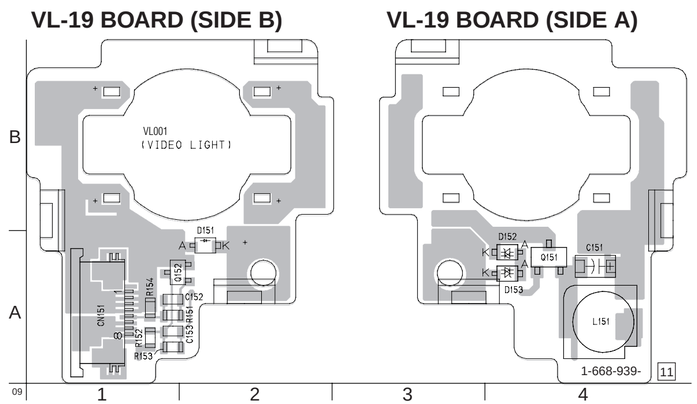

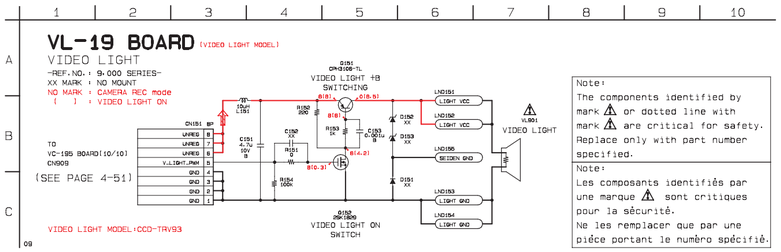

Note:
The components identified by mark ⚠ or dotted line with mark ⚠ are critical for safety. Replace only with part number specified.

Note:
Les composants identifiés par une marque ⚠ sont critiques pour la sécurité. Ne les remplacer que par une pièce portant le numéro spécifié.

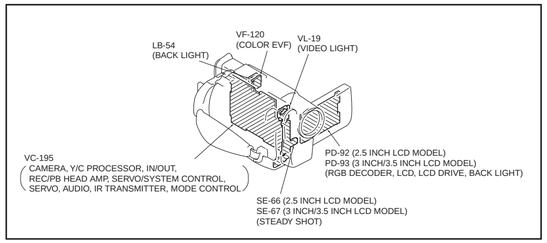
LB-54
(BACK LIGHT)
VF-120
(COLOR EVF)
VL-19
(VIDEO LIGHT)
VC-195
CAMERA, Y/C PROCESSOR, IN/OUT, REC/PB HEAD AMP, SERVO/SYSTEM CONTROL, SERVO, AUDIO, IR TRANSMITTER, MODE CONTROL.
PD-92 (2.5 INCH LCD MODEL)
PD-93 (3 INCH/3.5 INCH LCD MODEL)
(RGB DECODER, LCD, LCD DRIVE, BACK LIGHT)
SE-66 (2.5 INCH LCD MODEL)
SE-67 (3 INCH/3.5 INCH LCD MODEL)
(STEADY SHOT)

CF-50 (CONTROL (2.5 INCH LCD MODEL)) PRINTED WIRING BOARD

– Ref No. CF-50 BOARD: 4,000 series –

CF-50 BOARD

BH001 B-10

C001 B-6
C002 B-6

CN001 D-3
CN002 A-5
CN003 D-6
CN005 C-7
CN006 B-7
CN007 C-5
CN008 D-5

D001 D-6
D003 D-12
D004 A-13
D005 B-7
D006 B-6
D007 A-14
D008 B-6
D009 B-1
D102 A-4

Q001 D-5
Q002 C-1
Q003 B-3
Q005 B-2

R001 B-1
R002 B-13
R003 B-3
R005 A-13
R006 C-3
R007 D-3
R008 D-3
R009 D-1
R013 A-13
R015 C-14
R016 D-12
R019 C-14
R020 C-12
R023 B-14
R025 D-1
R026 C-12
R029 C-2
R031 B-4
R032 C-11
R036 C-2
R038 B-4
R039 C-2
R041 A-4
R049 B-3
R050 B-3
R051 B-3
R052 B-3
R053 A-4

S003 D-11
S004 C-15
S006 A-13
S008 D-13
S010 B-14
S012 C-15
S013 C-13
S015 A-15
S017 D-15
S018 C-12
S021 D-12
S022 C-11
S024 D-24

CF-50 BOARD (SIDE B)

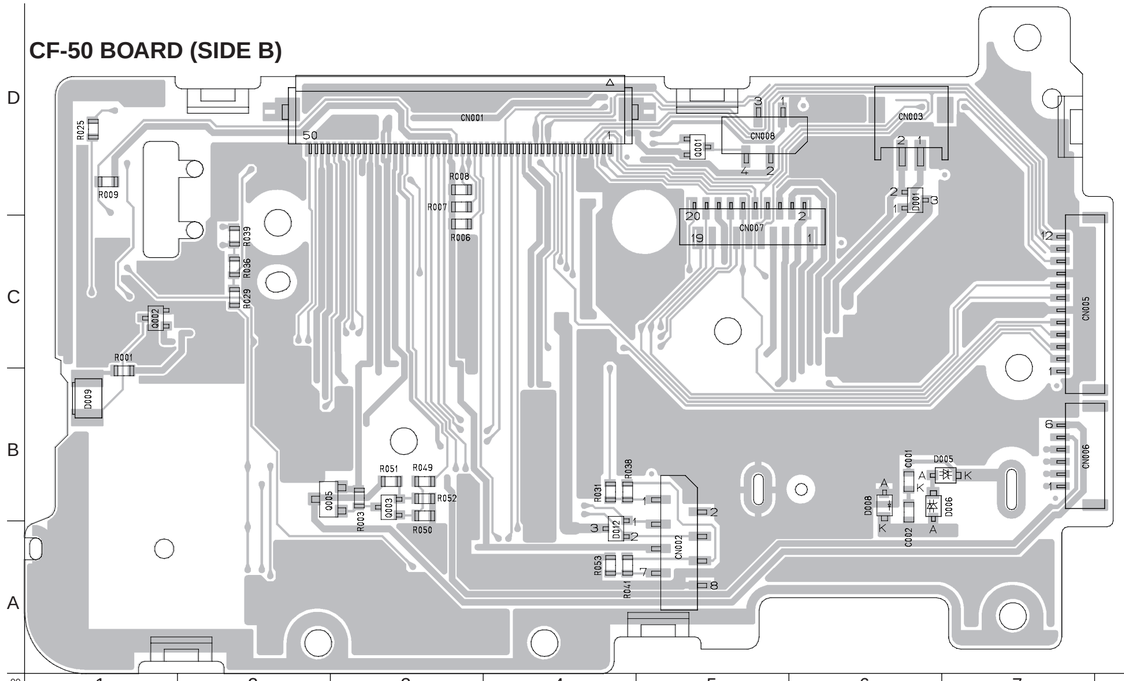

CF-50 BOARD (SIDE A)

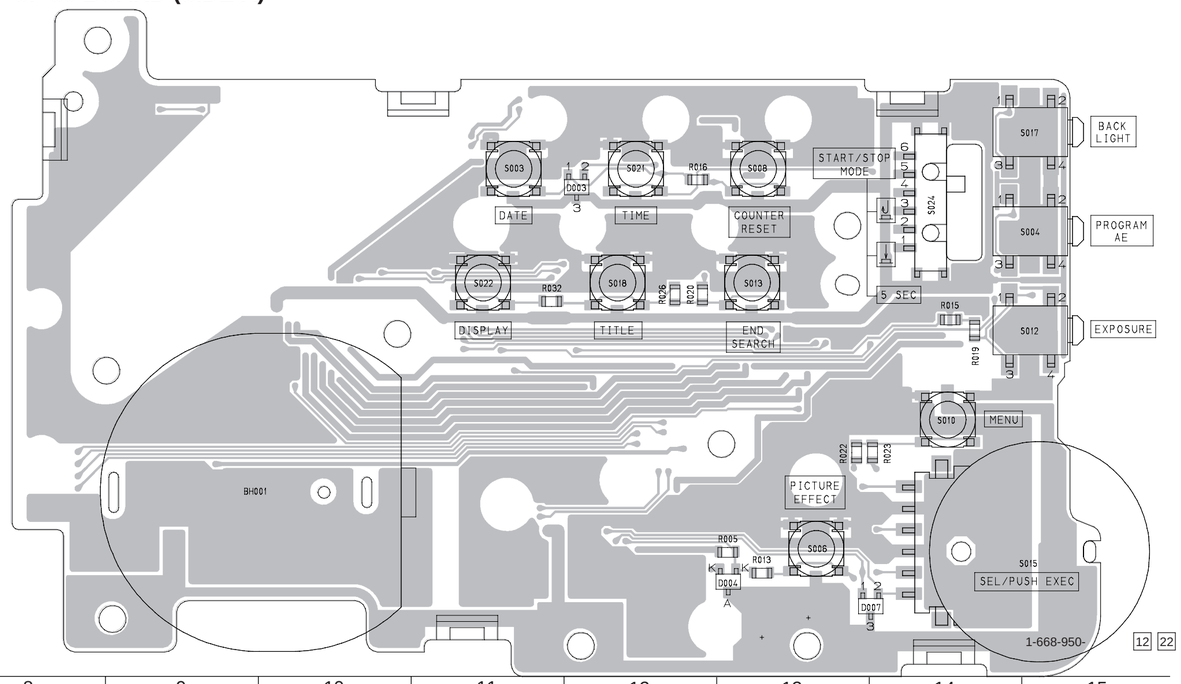

09 1 2 3 4 5 6 7 8 9 10 11 12 13 14 15

12 22

• **For Printed Wiring Boards.**

There are few cases that the part isn't mounted in this model is printed on this diagram.

• Chip transistor Chip diode

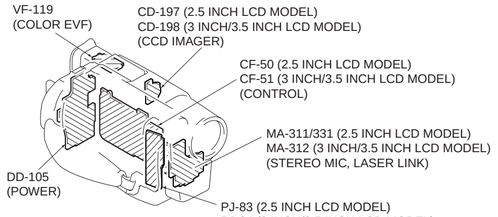

CF-50 BOARD (2.5 INCH LCD MODEL)

CONTROL

-REF.NO. : 4,000 SERIES-
XX MARK : NO MOUNT

CN001 50P

TO VC-195 BOARD(10/10) CN911 (SEE PAGE 4-51)

Q0001 TALLY LED DRIVE

Q0005 VTR UNREG SWITCH

Q0003 LCD +B ON SWITCH

(BACKLIGHT OF LCD INDICATOR MODEL)

SEL/PUSH EXEC S015

START/STOP MODE

PICTURE EFFECT S006 · MENU S010 · TIME S021 · S024

EXPOSURE S012 (EXPOSURE MODEL) · BACK LIGHT S017 · (WITHOUT EXPOSURE MODEL)

DATE S003 · COUNTER RESET S008 · END SEARCH S013 · TITLE S018 · DISPLAY S022

PROGRAM AE S004

CN005 12P

TO PD-92 BOARD(4/4) CN5804 (SEE PAGE 4-88)

CN006 6P

TO PD-92 BOARD(4/4) CN5803 (SEE PAGE 4-88)

CN007 XX

CN008 4P

TO VF-99 BOARD CN901 (SEE PAGE 4-113)

(MANUAL FOCUS MODEL)

CONTROL SWITCH BLOCK(MF-8500)

(FADER MODEL) FADER S002 · RV001 20K-20K · FAR · NEAR · FOCUS · INFINITY · MANUAL · AUTO · S001

CN001 8P · CN002 8P

• CONTROL SWITCH BLOCK(MF-8500) is replaced as a block. so that this PRINTED WIRING BOARD is omitted.

SP901 SPEAKER · CN003 2P

LN0001 CH GND · LN0002 CH GND

D001 MAZL080GFL50 · D012 XX · D003 XX · D004 XX · D007 XX

C001 XX · C002 XX · D005 MA8082-TX · D006 MA8082-TX · D008 MA111-TX

BH001 LITHIUM BATTERY HOLDER

2.5INCH LCD MODEL:CCD-TRV15/TRV15PK/TRV15E/TRV15EP/TRV25/TRV25PK/TRV35/TRV35E/TRV65/TRV65PK/TRV615
EXPOSURE MODEL:EXCEPT CCD-TRV15/TRV15PK/TRV15E/TRV15EP/TRV25/TRV25PK/TRV215
WITHOUT EXPOSURE MODEL:CCD-TRV15/TRV15PK/TRV15E/TRV15EP/TRV25/TRV25PK/TRV215
BACKLIGHT OF LCD INDICATOR MODEL:CCD-TRV65/TRV65PK/TRV615
FADER MODEL:EXCEPT CCD-TRV15/TRV15PK/TRV15E/TRV15EP/TRV25/TRV25PK/TRV215
MANUAL FOCUS MODEL:EXCEPT CCD-TRV35/TRV35E/TRV65/TRV65PK/TRV615

• SIGNAL PATH

	VIDEO SIGNAL			AUDIO SIGNAL
	CHROMA	Y	Y/CHROMA	
REC	→	⇒		
PB	⇨	⇨		⇨

CF-51 BOARD (3INCH/3.5INCH LCD MODEL)

CONTROL

-REF.NO. : 9.000 SERIES-
XX MARK : NO MOUNT
NO MARK : CAMERA REC mode

CN001 50P

LCD_Y 1
REG_GND 2
LCD_U 3
REG_GND 4
LCD_V 5
REG_GND 6
LCD_HD 7
LCD_VD 8
XCS_EVF_D/A 9
XCS_LCD_DA 10
REG_GND 11
BK_EVF_Y 12
REG_GND 13
SP_+/BEEP_SIG 14
SP_- 15
DIAL_A 16
DIAL_B 17
TALLY_LED 18
XCS_LCD_DRIVER 19
LCD_COM/XDATA 20
KEY_AD7 21
KEY_AD2 22
KEY_AD3 23
KEY_AD4 24
KEY_AD5 25
KEY_AD6 26
D_3.1V 27
XOSD_SCK 28
OSD_SO 29
FOCUS_A_AD 30
FOCUS_B_AD 31
XCAM_MODE_SW 32
XVTR_MODE_SW 33
LCD_LED_ON 34
BATT_LI_3V 35
CHARGE_LED_ON 36
EVF_4.75V 37
EVF_4.75V 38
EVF_BL_GND 39
VTR_UNREG 40
EVF_BL_GND 41
XVC_SCK 42
VC_SO 43
VC_SI 44
EVF_BL_4.75V 45
PANEL_HOLD 46
A_4.75V 47
EVF_13.5V 48
VCO 49
EVF_VG 50

TO
VC-195 BOARD(10/10)
CN911
(SEE PAGE 4-51)

Q001
TALLY LED
DRIVE
(B/W EVF
MODEL)
XTALLY_LED
R001 XX
D009 XX
Q002 XX
Q001 UN5213-TX

Q005
VTR UNREG
SWITCH
2SA1362-YG-EL
R033 10K
Q003 2SD1819A-QRS-TX
R051 22K
R049 220K
R050 470K
R052 4700

Q003
LCD +B ON
SWITCH

S015
SEL/PUSH EXEL

S024
START/STOP MODE
SSEC

R005 10K AD2
R006 10K AD3(ESX)
R007 10K AD4
R008 10K AD5
R009 10K AD6

R013 1200 PICTURE EFFECT S001 XX
R022 1500 S006
R023 2200 MENU S010
R029 3900 TIME S021
R036 8200
R039 27K

R015 1200 EXPOSURE S012
R018 1500 S017
R025 2000 BACK LIGHT
R031 3900 FADER S027
R038 8200
R041 27K
INFINITY
AUTO

R016 1200 DATE S003
R020 1500 COUNTER RESET S008
R026 2000 END SEARCH S013
R032 3900 TITLE S018
DISPLAY S022

PROGRAM AE S004

D012 XX
D001 MAZJ082FLSD
D003 XX
D004 XX
D007 XX

C001 XX
C002 XX
D009 MA8082-TX
D008 MA8082-TX
D006 MA111-TX
BH001 LITHIUM BATTERY HOLDER

LN0001 CH GND
LN0002 CH GND

CN002 8P
FADER 1
REG_GND 2
AUTO 3
INFINITY 4
REG_GND 5
FOCUS_A 6
FOCUS_B 7
D_3.1V 8

AUTO
INFINITY
FOCUS_A
FOCUS_B

CN003 2P
SP(+) 1
SP(-) 2
SP901 SPEAKER
SP_+
SP_-

CN005 12P
1 N.C.
2 AD6
3 XCS_LCD_DA
4 VC_SO
5 XVC_SCK
6 REG_GND
7 PANEL_XVD
8 LCD_HOLD
9 REG_GND
10 PANEL_U
11 PANEL_V
12 PANEL_Y
TO
PD-93 BOARD(4/4)
CN5804
(SEE PAGE 4-100)

CN006 6P
1 XCS_LCD_DRIVER
2 LCD_COM/XDATA
3 OSD_SO
4 XOSD_SCK
5 DISP_LCD_VDD
6 DISP_BL
TO
PD-93 BOARD(4/4)
CN5803
(SEE PAGE 4-100)

CN007 20P (COLOR EVF MODEL)
1 EVF_BL_4.75V
2 EVF_BL_GND
3 EVF_BL_GND
4 EVF_13.5V
5 EVF_4.75/3.1V
6 A_4.75V
7 D_3.1V
8 EVF_XHD
9 EVF_R-Y
10 EVF_Y
11 EVF_B-Y
12 EVF_XVD
13 EVF_VG
14 VCO
15 EVF_GND
16 EVF_GND
17 VC_SI
18 XVC_SCK
19 VC_SO
20 XCS_EVF_D/A
TO
VF-120 BOARD
CN5301
(SEE PAGE 4-109)
TO
VF-119 BOARD
CN5401
(SEE PAGE 4-102)

CN008 4P (B/W EVF MODEL)
1 EVF_4.75V
2 EVF_GND
3 BK_EVF_Y
4 XTALLY_LED
TO
VF-99 BOARD
CN901
(SEE PAGE 4-113)

CONTROL SWITCH BLOCK (MR-8500)

FOCUS
INFINITY MANUAL AUTO
S001
RV001 20K/20K
FAR
NEAR

CN001 8P
1 FADER
2 REG_GND
3 AUTO
4 INFINITY
5 REG_GND
6 FOCUS_A
7 FOCUS_B
8 D_3.1V

• CONTROL SWITCH BLOCK(MR-8500) is replaced as a block.
So that this PRINTED WIRING BOARD is omitted.

• SIGNAL PATH

	VIDEO SIGNAL			AUDIO SIGNAL
	CHROMA	Y	Y/CHROMA	
REC	➡	➡		
PB	⇨	⇨		⇨

3INCH LCD MODEL:CCD-TRV93
3.5INCH LCD MODEL:CCD-TRV85/TRV815
COLOR EVF MODEL:CCD-TRV93
B/W EVF MODEL:CCD-TRV85/TRV815

CF-51 (CONTROL (3 INCH/3.5 INCH LCD MODEL) **PRINTED WIRING BOARD**
– Ref No. CF-51 BOARD: 9,000 series –

CF-51 BOARD (SIDE B)

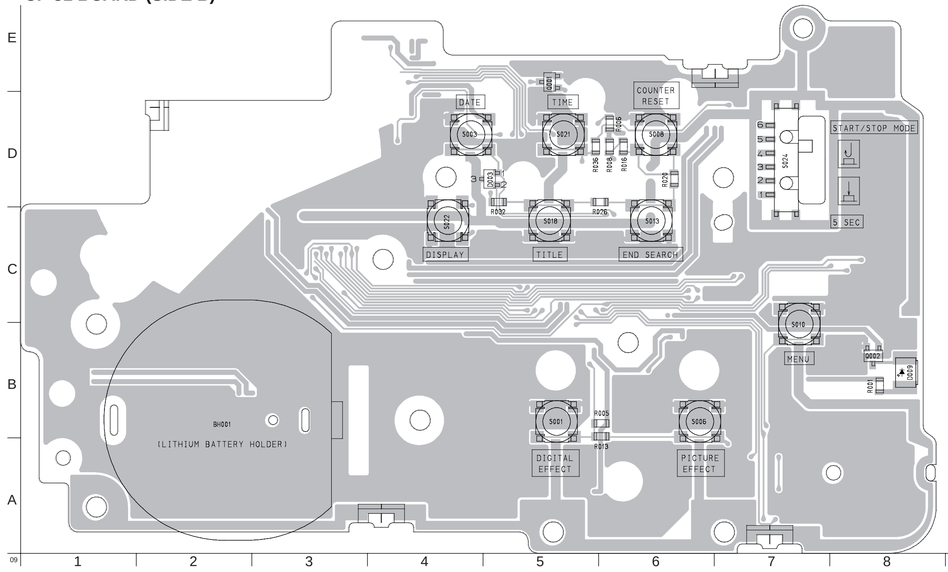

CF-51 BOARD (SIDE A)

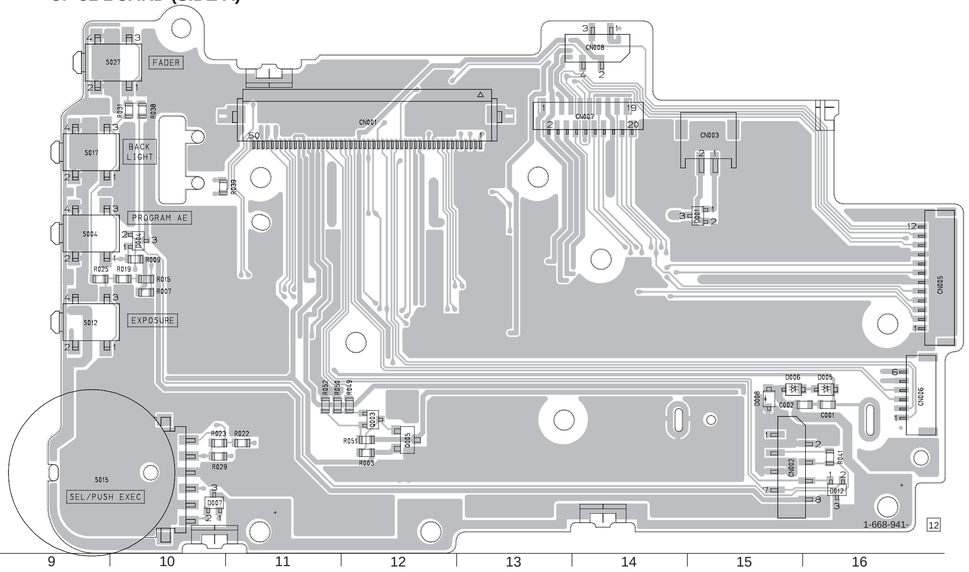

CF-51 BOARD

BH001	B-2	R031	D-10
		R038	D-5
C001	B-16	R038	D-10
C002	B-15	R039	D-10
		R041	A-16
CN001	D-12	R049	B-12
CN002	A-15	R050	B-11
CN003	D-15	R051	A-12
CN005	C-16	R052	B-11
CN006	B-16		
CN007	D-14	S001	B-5
CN008	E-14	S002	C-4
		S003	D-4
D001	C-15	S004	C-9
D003	D-5	S006	B-6
D004	C-10	S008	D-6
D005	B-16	S010	B-7
D006	B-15	S012	C-9
D007	A-10	S013	C-6
D008	B-15	S015	A-9
D009	B-8	S017	D-9
D012	A-16	S018	C-5
		S021	D-5
Q001	E-5	S024	D-7
Q002	B-8	S025	C-9
Q003	B-12	S027	E-10
Q005	A-12		
R001	B-8		
R003	A-12		
R005	B-5		
R006	D-6		
R007	C-10		
R008	D-6		
R009	C-10		
R013	B-5		
R015	C-10		
R018	D-6		
R019	C-10		
R020	D-6		
R022	A-11		
R023	A-10		
R029	A-10		

• For Printed Wiring Boards.

There are few cases that the part isn't mounted in this model is printed on this diagram.

• Chip transistor

Chip diode

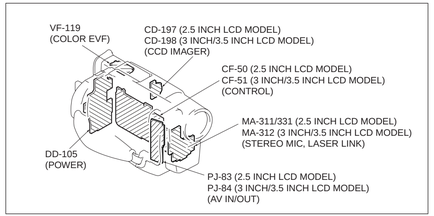

CONTROL
CF-51 (3 INCH/3.5 INCH LCD MODEL)

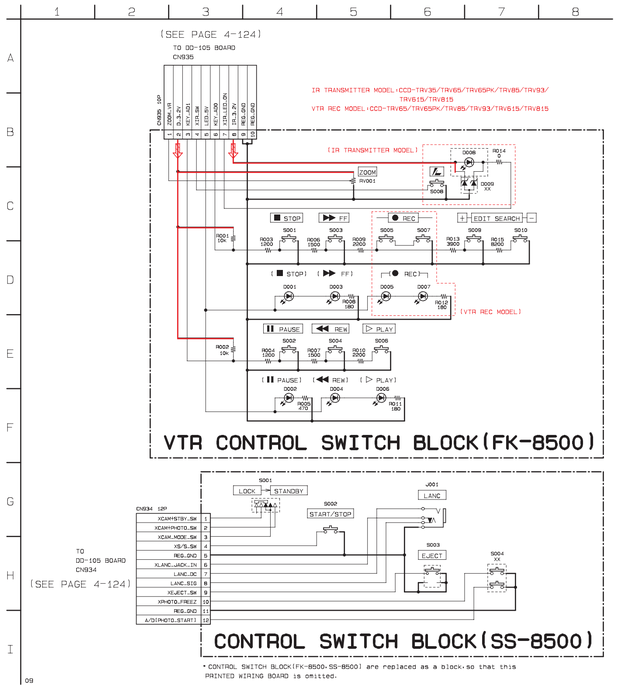

CONTROL SWITCH BLOCK, RGB DECODER, LCD DRIVE, BACK LIGHT, LCD
FK-8500, SS-8500 PD-92 (2.5 INCH LCD MODEL)

PD-92 (RGB DECODER, LCD DRIVE, BACK LIGHT, LCD (2.5 INCH LCD MODEL)) PRINTED WIRING BOARD
– Ref No. PD-92 BOARD: 10,000 series –

PD-92 BOARD

C5501	B-10	D5604	C-10	R5542	D-3	R5673	D-1
C5502	B-10	D5701	C-5	R5544	C-2	R5674	D-2
C5503	C-2	D5702	C-5	R5546	C-2	R5676	D-1
C5504	C-10	D5703	D-5	R5546	D-2	R5678	D-9
C5505	C-10	D5704	C-7	R5602	C-2	R5679	D-2
C5506	B-2			R5603	D-8	R5680	D-2
C5507	C-2	IC5501	B-10	R5604	D-3	R5681	D-2
C5508	B-2	IC5502	C-2	R5605	C-1	R5682	D-1
C5509	C-3	IC5601	C-9	R5606	C-10	R5683	D-2
C5510	C-1	IC5602	C-8	R5607	A-2	R5684	D-2
C5511	C-2	IC5701	C-4	R5609	C-9	R5685	D-3
C5512	C-1	IC5801	C-4	R5610	B-10	R5686	D-3
C5513	C-1			R5612	C-9	R5688	C-9
C5514	C-2	L5501	C-3	R5614	C-9	R5692	C-9
C5515	C-2	L5502	A-2	R5615	C-9	R5694	B-9
C5516	C-2	L5503	A-2	R5616	B-10	R5695	B-9
C5517	C-1	L5601	A-2	R5617	B-9	R5695	D-10
C5518	C-3	L5603	C-9	R5618	C-9	R5697	C-10
C5519	B-2	L5604	A-2	R5619	B-9	R5698	B-9
C5520	C-3	L5605	C-9	R5620	B-9	R5698	D-9
C5601	A-2	L5701	C-7	R5621	C-9	R5701	C-5
C5602	A-2			R5622	B-8	R5702	C-5
C5603	B-10	Q5501	C-2	R5623	B-8	R5703	C-4
C5604	C-9	Q5601	B-9	R5624	B-9	R5704	C-4
C5605	C-9	Q5602	B-9	R5625	C-10	R5705	C-4
C5607	B-9	Q5603	B-10	R5626	C-9	R5706	C-4
C5608	C-9	Q5604	C-10	R5627	C-10	R5707	C-7
C5609	B-10	Q5605	C-8	R5628	C-10	R5708	D-4
C5610	C-9	Q5606	C-9	R5629	B-9	R5709	D-7
C5611	B-8	Q5607	C-9	R5630	B-9	R5710	D-4
C5612	C-10	Q5608	B-8	R5631	C-9	R5801	C-1
C5613	B-8	Q5609	B-9	R5632	B-9	R5802	C-1
C5614	C-10	Q5701	C-3	R5634	B-9	R5803	A-1
C5615	C-10	Q5702	C-4	R5635	C-10	R5804	A-1
C5616	C-9			R5636	B-10	R5805	C-6
C5618	D-9	R5501	B-2	R5637	C-10	R5806	A-1
C5619	D-2	R5502	B-2	R5638	C-10	R5807	B-7
C5620	D-10	R5504	B-2	R5639	C-1	R5808	B-9
C5622	C-10	R5505	B-2	R5640	C-8	R5809	C-7
C5623	C-2	R5506	B-2	R5641	C-3	R5810	B-9
C5624	B-3	R5507	B-2	R5642	C-10	R5811	C-4
C5625	B-2	R5508	B-1	R5644	C-9	R5812	C-4
C5633	B-9	R5508	B-2	R5645	C-10		
C5634	B-9	R5509	B-1	R5646	C-10	S5801	D-1
C5701	C-8	R5510	B-3	R5647	D-2	S5802	C-1
C5702	C-8	R5511	B-3	R5648	C-3	S5803	B-1
C5703	C-3	R5512	B-1	R5648	D-10	S5804	A-1
C5704	C-7	R5513	B-2	R5651	D-2		
C5705	C-6	R5516	B-2	R5652	D-2	T5701	C-4
C5706	C-4	R5517	B-1	R5653	D-9		
C5801	C-4	R5518	B-1	R5654	D-9		
C5821	C-1	R5519	C-3	R5657	C-9		
		R5520	C-3	R5658	D-9		
CN5501	D-9	R5521	B-2	R5659	D-10		
CN5601	D-10	R5522	B-2	R5660	D-10		
CN5701	D-6	R5523	C-3	R5661	D-10		
CN5801	C-8	R5526	C-1	R5663	C-9		
CN5802	C-7	R5527	B-1	R5664	D-10		
CN5803	C-8	R5528	C-3	R5665	D-1		
CN5804	C-10	R5529	C-1	R5665	D-10		
CN5805	C-6	R5530	B-1	R5667	D-1		
		R5531	C-2	R5668	D-1		
D5601	B-10	R5532	C-3	R5669	D-1		
D5602	B-9	R5533	B-1	R5670	D-1		
D5603	B-10	R5537	D-8	R5671	D-9		
D5605	B-9	R5541	D-2	R5672	D-9		

PD-92 BOARD (SIDE B)

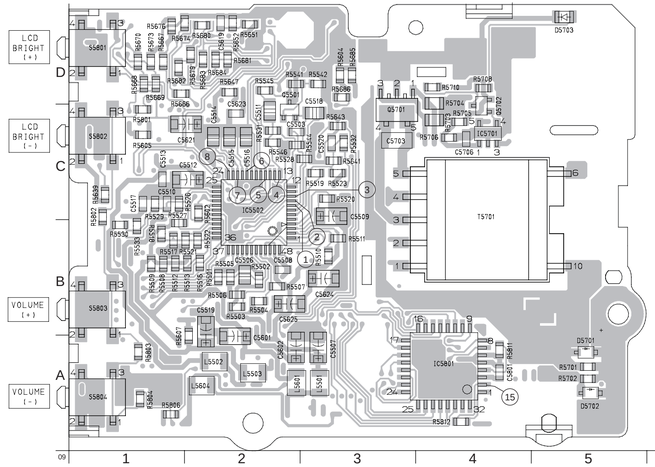

PD-92 BOARD (SIDE A)

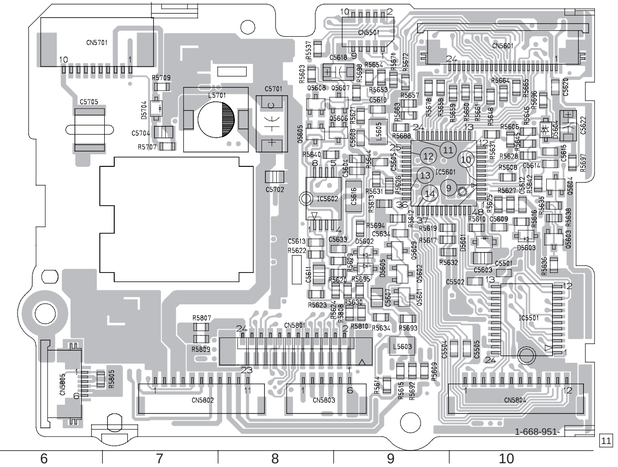

- **For Printed Wiring Boards.**
- This board is four-layer print board. However, the patterns of layers 2 to 3 have not been included in the diagram.

There are few cases that the part isn't mounted in this model is printed on this diagram.

- Chip transistor

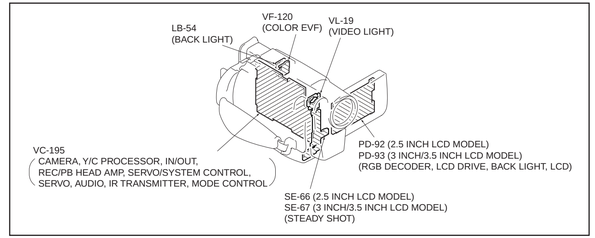

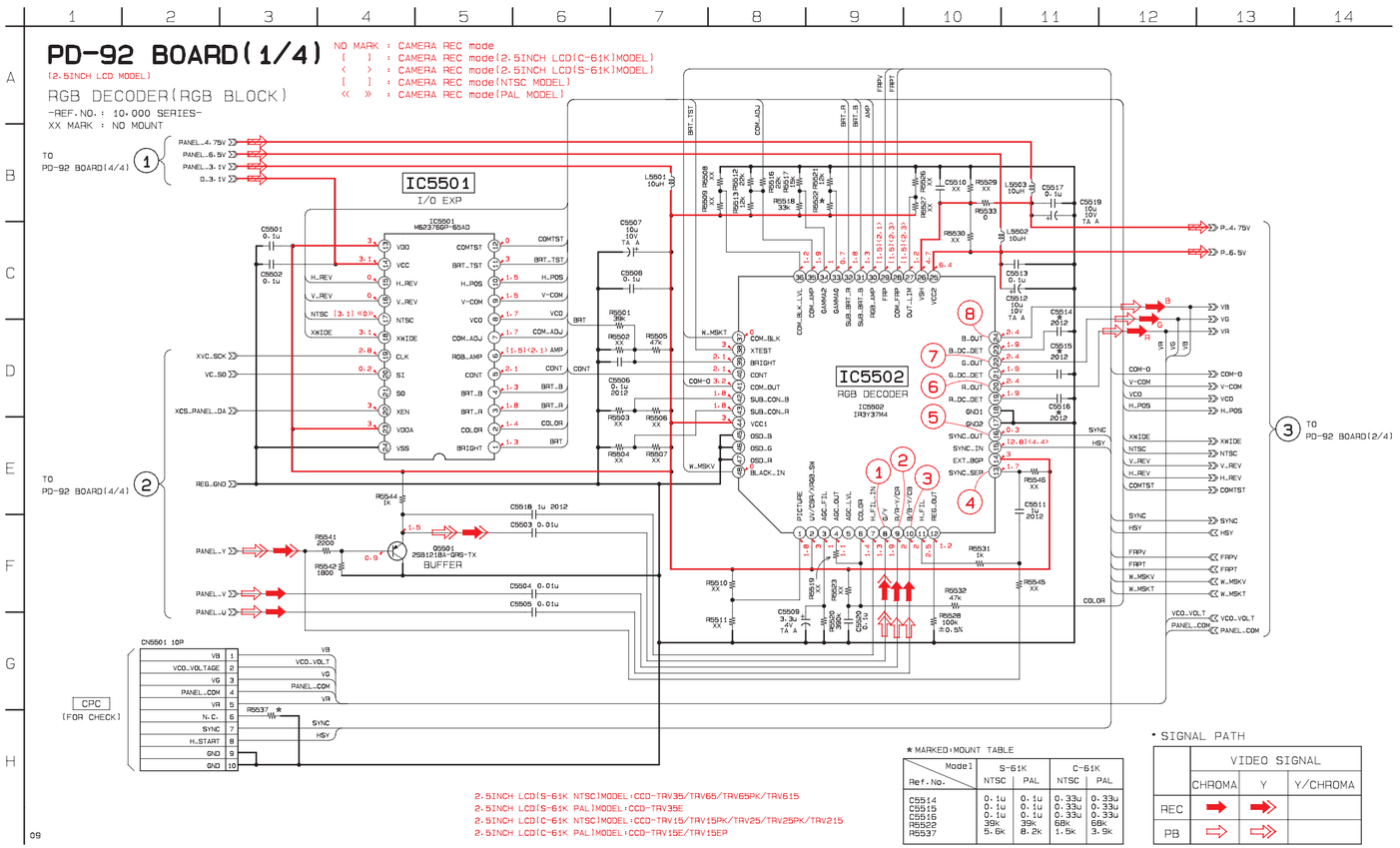

★ MARKED MOUNT TABLE

Ref.No. \ Model	S-61K NTSC	S-61K PAL	C-61K NTSC	C-61K PAL
C5514	0.1u	0.1u	0.33u	0.33u
C5515	0.1u	0.1u	0.33u	0.33u
C5516	0.1u	0.1u	0.33u	0.33u
R5522	39k	39k	68k	68k
R5537	5.6k	8.2k	1.5k	3.9k

• SIGNAL PATH

	VIDEO SIGNAL		
	CHROMA	Y	Y/CHROMA
REC	➡	➡	
PB	⇨	⇨	

PD-92 BOARD (1/4)
CAMERA REC

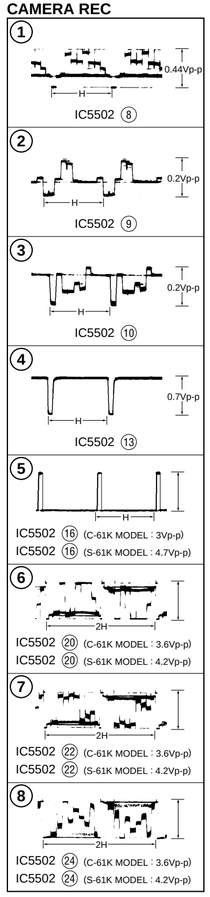

PD-92 BOARD (2/4)
CAMERA REC

- **For schematic diagrams.**
- Refer to page 4–79 for Printed Wiring Board.

⑨ — H
IC5601 ④ (C-61K : 3Vp-p)
IC5601 ④ (S-61K : 4.7Vp-p)

⑩ — V
IC5601 ⑤ (C-61K : 3Vp-p)

⑩ — 20msec
IC5601 ⑤ (S-61K : 4.7Vp-p)

⑪
Approx. 2.9MHz
IC5601 ㉔ (C-61K : 3.4Vp-p)

⑪
Approx. 2.9MHz
IC5601 ㉔ (S-61K : 4.7Vp-p)

⑫
Approx. 5.8MHz
IC5601 ㉖ (C-61K : 3.2Vp-p)
IC5601 ㉖ (S-61K : 4.1Vp-p)

⑬ — V
IC5601 ㉞ (C-61K : 3Vp-p)

⑬ — 20msec
IC5601 ㉞ (S-61K : 4.7Vp-p)

⑭ — H
IC5601 ㊲ (C-61K : 3Vp-p)
IC5601 ㊲ (S-61K : 4.7Vp-p)

PD-92 BOARD(2/4) (2.5INCH LCD MODEL)

LCD DRIVE (TG BLOCK)
-REF.NO. : 10.000 SERIES-
XX MARK : NO MOUNT

NO MARK : CAMERA REC mode
( ) : CAMERA REC mode(2.5INCH LCD(C-61K)MODEL)
< > : CAMERA REC mode(2.5INCH LCD(S-61K)MODEL)
[ ] : CAMERA REC mode(NTSC MODEL)
« » : CAMERA REC mode(PAL MODEL)

★MARKED•MOUNT TABLE

Model / Ref.No.	S-61K	C-61K
C5601	XX	10u
C5603	0.1u	0.33u
C5614	330p	XX
C5615	220p	XX
C5618	6.8u	XX
C5619	0.01u	XX
C5623	XX	0.1u
IC5601	LZ9GH1B4	CM7017L2-T4
L5601	XX	10uH
Q5604	2SD1819A-QRS	XX
R5602	XX	0
R5605	XX	0
R5607	0	XX
R5608	0	XX
R5610	100k	56k
R5621	1M	XX
R5625	100k	68k
R5627	180k	100k
R5632	0	XX
R5635	4700	XX
R5636	22k	0
R5637	0	XX
R5638	10k	XX
R5639	10k	XX
R5642	4700	XX
R5645	82k	XX
R5646	82k	XX
R5647	XX	0
R5648	XX	0
R5651	33k	XX
R5652	22k	0
R5653	33k	XX
R5654	22k	XX
R5657	0	XX
R5658	0	XX
R5659	0	XX
R5660	0	XX
R5661	0	XX
R5663	XX	0
R5664	XX	0
R5665	XX	0
R5666	XX	0
R5667	XX	0
R5668	XX	0
R5669	0	XX
R5670	0	XX
R5671	0	XX
R5672	XX	220k
R5673	XX	0
R5674	0	XX
R5676	0	XX
R5678	47	0
R5679	47	XX
R5680	47	XX
R5681	47	XX
R5682	XX	47
R5683	XX	47
R5684	XX	47
R5692	22k	47k
R5693	180k	470k
R5696	0	XX
R5697	XX	0
R5698	XX	0

IC5602 FRPC AMP
Q5605-5608 FRPC BUFFER

TO PD-92 BOARD(4/4) ④ — PANEL_+13.2V, PANEL_-15.3V
TO PD-92 BOARD(1/4) ③
TO PD-92 BOARD(4/4) ⑤ — PANEL_HOLD, PANEL_XVD

IC5601 TIMING GENERATOR

C-61K MODEL/S-61K MODEL
CN5601 24P

24	VSH/CLD
23	VDD/SPD
22	VR/CTR
21	VB/EX3
20	VG/EX2
19	VSS/VB12
18	MODE1/RES
17	MCLK/TST
16	HCNT/VR
15	CLR/VG
14	OE/VB
13	SRTL/GND
12	SRTR/VSH
11	VBC/COM
10	VCOM/VGL
9	MODE2/VSS
8	RESET/MO2
7	GSRT/MO1
6	GPCK/EX1
5	GRES/SPS
4	VREFL/CLS
3	VGL/VCC
2	VREFH/VSH
1	VGH/VGH

LCD901 COLOR LCD 2.5INCH MONITOR

• SIGNAL PATH

	VIDEO SIGNAL		
	CHROMA	Y	Y/CHROMA
REC	➡		
PB	⇨		

2.5INCH LCD(S-61K)MODEL•CCD-TRV35/TRV35E/TRV65/TRV65PK/TRV615
2.5INCH LCD(C-61K)MODEL•CCD-TRV15/TRV15PK/TRV15E/TRV15EP/TRV25/TRV25PK/TRV215

• **For schematic diagrams.**
• Refer to page 4–79 for Printed Wiring Board.

PD-92 BOARD (3/4) (2.5INCH LCD MODEL)

BACK LIGHT (BL BLOCK)

-REF.NO. : 10.000 SERIES-
XX MARK : NO MOUNT
NO MARK : CAMERA REC mode

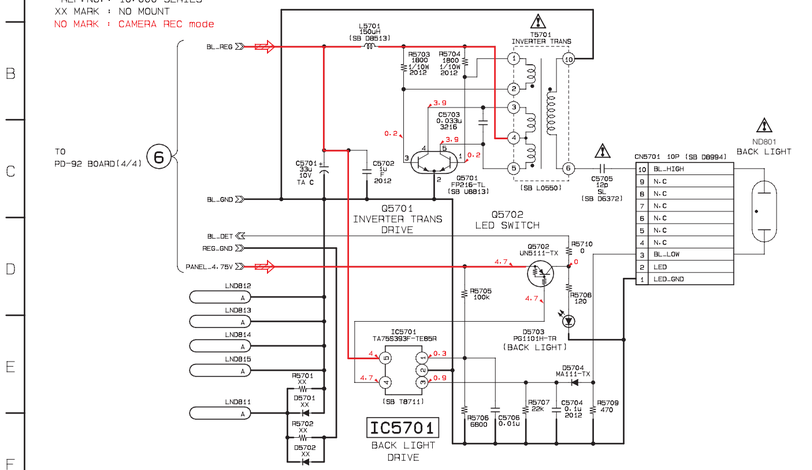

Note:	Note:
The components identified by mark ⚠ or dotted line with mark ⚠ are critical for safety. Replace only with part number specified.	Les composants identifiés par une marque ⚠ sont critiques pour la sécurité. Ne les remplacer que par une pièce portant le numéro spécifié.

2.5INCH LCD MODEL:EXCEPT CCD-TRV85/TRV93/TRV815

• **For schematic diagrams.**
• Refer to page 4–79 for Printed Wiring Board.

PD-92 BOARD (4/4)

(2.5INCH LCD MODEL)

LCD (LCD BLOCK)

-REF.NO. : 10.000 SERIES-
XX MARK : NO MOUNT
NO MARK : CAMERA REC mode

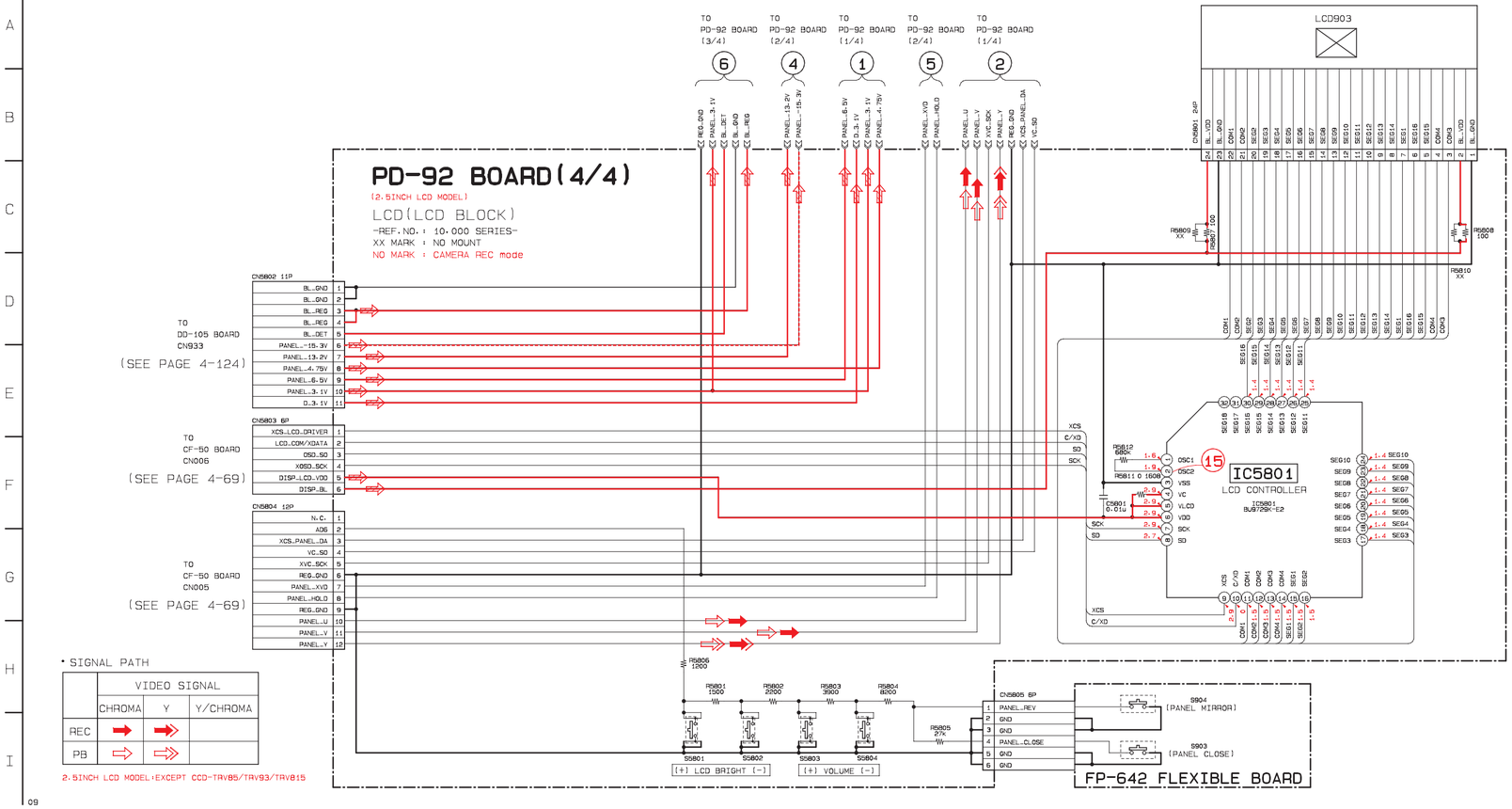

• SIGNAL PATH

	VIDEO SIGNAL		
	CHROMA	Y	Y/CHROMA
REC	➡	➡	
PB	⇨	⇨	

2.5INCH LCD MODEL:EXCEPT CCD-TRV85/TRV93/TRV815

PD-92 BOARD (4/4)
CAMERA REC

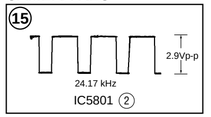

BACK LIGHT, LCD
PD-92 (3/4, 4/4) (2.5 INCH LCD MODEL)

PD-93 (RGB DECODER, LCD DRIVE, BACK LIGHT, LCD (3 INCH/3.5 INCH LCD MODEL) PRINTED WIRING BOARD

– Ref No. PD-93 BOARD: 10,000 series –

PD-93 BOARD

C4501	B-2	D4702	A-6	R4546	B-2	R4680	D-2
C4502	B-2	D4704	D-5	R4602	C-3	R4681	D-2
C4503	B-11			R4603	D-10	R4682	D-3
C4504	B-11	IC4501	A-12	R4604	D-11	R4683	D-3
C4505	B-11	IC4502	B-3	R4605	A-2	R4683	D-11
C4506	B-3	IC4601	C-11	R4606	A-2	R4684	D-3
C4507	A-3	IC4602	C-3	R4607	A-1	R4685	C-10
C4508	B-11	IC4701	D-4	R4608	C-2	R4686	D-10
C4509	B-3	IC4801	A-4	R4609	B-11	R4692	B-11
C4510	A-3			R4610	C-2	R4693	C-10
C4511	B-2	L4501	A-3	R4612	B-11	R4694	C-10
C4512	A-2	L4502	A-2	R4613	B-11	R4695	C-3
C4513	B-2	L4601	A-10	R4614	C-10	R4696	D-12
C4514	B-2	L4603	B-11	R4615	B-11	R4697	D-12
C4515	B-2	L4604	A-11	R4616	B-12	R4698	D-3
C4516	B-2	L4605	C-11	R4617	B-11	R4701	B-6
C4517	A-2	L4701	C-9	R4619	B-11	R4702	A-7
C4518	A-11			R4620	C-3	R4703	B-4
C4519	A-3	Q4501	A-11	R4621	C-10	R4703	D-9
C4520	C-3	Q4601	B-11	R4622	C-3	R4704	B-4
C4601	A-10	Q4602	B-11	R4623	C-3	R4705	D-9
C4602	B-11	Q4603	C-2	R4624	C-11	R4706	D-9
C4603	C-2	Q4604	C-2	R4625	B-11	R4707	D-5
C4604	D-3	Q4605	D-10	R4626	C-3	R4708	D-5
C4605	C-3	Q4606	D-10	R4627	B-11	R4710	D-9
C4607	C-10	Q4607	D-10	R4628	C-2	R4801	D-1
C4608	C-10	Q4608	D-10	R4629	C-3	R4802	C-1
C4609	B-12	Q4609	B-11	R4630	C-11	R4803	B-1
C4610	C-11	Q4701	C-4	R4631	C-3	R4804	A-1
C4611	C-3	Q4702	D-9	R4632	B-11	R4806	A-6
C4612	B-12			R4634	C-12	R4806	A-12
C4613	C-3	R4501	B-11	R4635	C-2	R4807	B-8
C4614	C-2	R4502	B-3	R4636	C-2	R4808	B-11
C4615	C-2	R4503	B-4	R4637	C-3	R4809	B-8
C4616	D-4	R4504	B-3	R4638	C-2	R4810	B-11
C46181	D-11	R4505	B-11	R4639	C-2	R4811	A-4
C4619	D-3	R4506	B-3	R4640	D-3	R4812	A-4
C4620	D-3	R4507	B-3	R4641	C-3		
C4621	D-12	R4508	A-3	R4642	C-2	S4801	D-1
C4622	D-2	R4509	A-3	R4643	D-3	S4802	D-1
C4623	D-10	R4510	B-3	R4644	D-3	S4803	B-1
C4624	C-4	R4511	B-3	R4645	C-2	S4804	A-1
C4625	C-4	R4512	A-3	R4646	C-2		
C4633	C-10	R4513	A-3	R4647	C-3	T4701	C-5
C4634	C-11	R4514	C-3	R4648	C-3		
C4701	C-9	R4516	A-3	R4651	D-3		
C4702	B-10	R4516	C-3	R4652	D-3		
C4703	C-4	R4517	A-3	R4653	D-2		
C4704	D-5	R4518	A-3	R4654	D-2		
C4705	D-8	R4519	B-3	R4657	D-11		
C4706	D-4	R4520	B-3	R4658	D-11		
C4707	C-4	R4521	A-3	R4659	D-11		
C4801	A-4	R4522	A-3	R4660	D-11		
		R4523	C-3	R4661	D-11		
CN4501	C-12	R4526	A-3	R4663	D-11		
CN4601	D-12	R4527	A-3	R4664	D-3		
CN4701	D-9	R4528	B-3	R4665	D-3		
CN4801	B-9	R4529	A-3	R4666	D-3		
CN4802	A-8	R4530	A-2	R4667	D-3		
CN4803	A-9	R4531	C-2	R4668	C-12		
CN4804	A-10	R4532	A-12	R4669	D-12		
CN4805	A-7	R4533	A-2	R4670	D-2		
CN4806	B-12	R4534	B-2	R4671	D-3		
		R4535	B-2	R4672	D-10		
D4601	C-2	R4536	B-2	R4673	D-12		
D4602	C-10	R4537	C-2	R4674	D-3		
D4603	B-12	R4541	A-11	R4676	D-2		
D4605	C-10	R4542	A-11	R4677	D-11		
D4614	D-12	R4544	A-11	R4678	D-2		
D4701	B-6	R4545	C-2	R4678	D-3		

PD-93 BOARD (SIDE B)

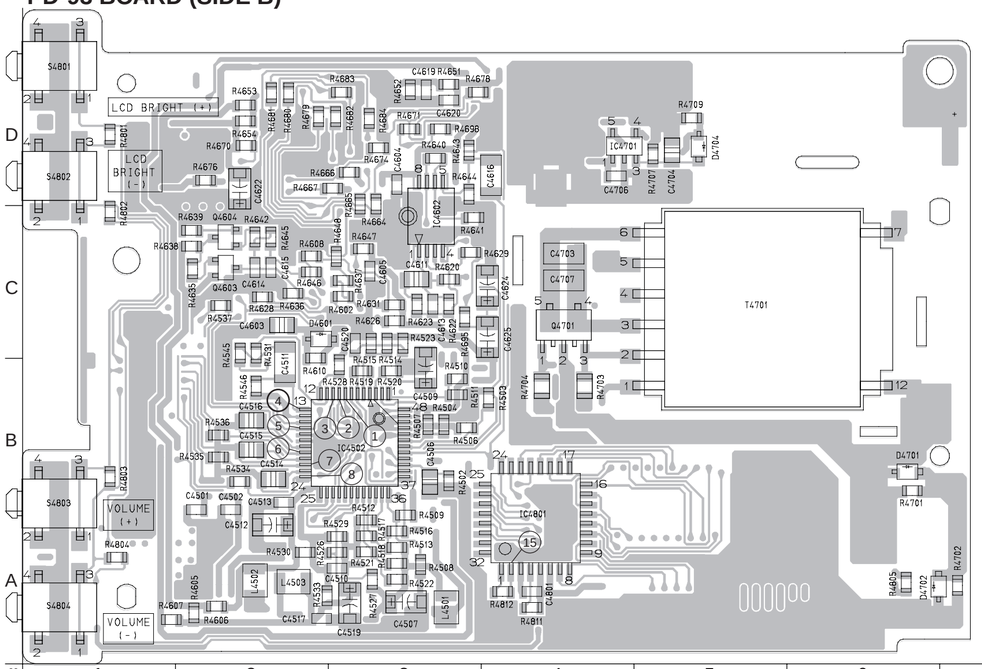

PD-93 BOARD (SIDE A)

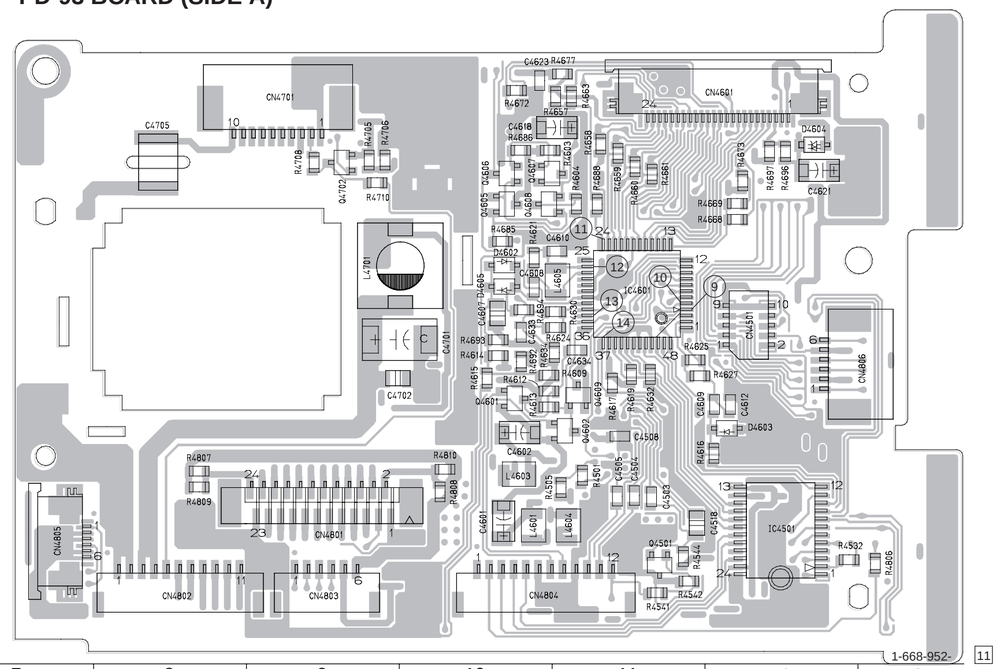

- **For Printed Wiring Boards.**
- This board is four-layer print board. However, the patterns of layers 2 to 3 have not been included in the diagram.

There are few cases that the part isn't mounted in this model is printed on this diagram.

- Chip transistor

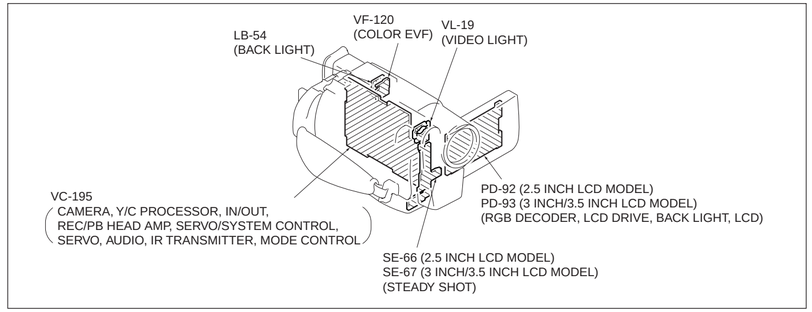

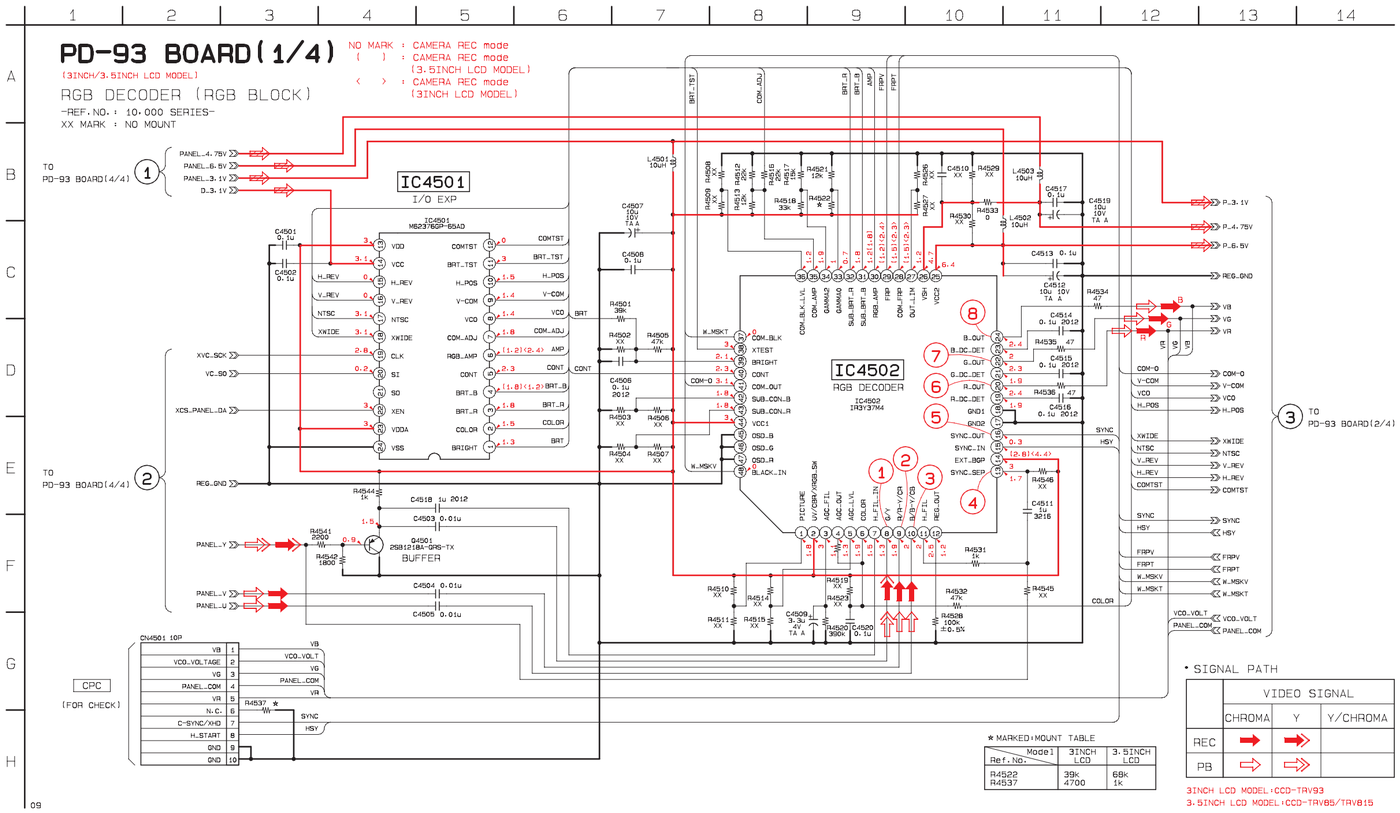

PD-93 BOARD (1/4)
CAMERA REC

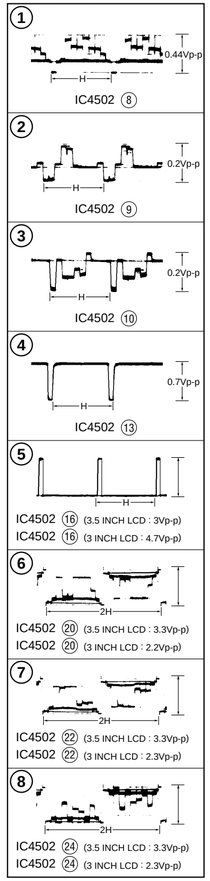

RGB DECODER
PD-93 (1/4) (3 INCH/3.5 INCH LCD MODEL)

- **For schematic diagrams.**
- Refer to page 4–90 for Printed Wiring Board.

PD-93 BOARD (2/4)
CAMERA REC

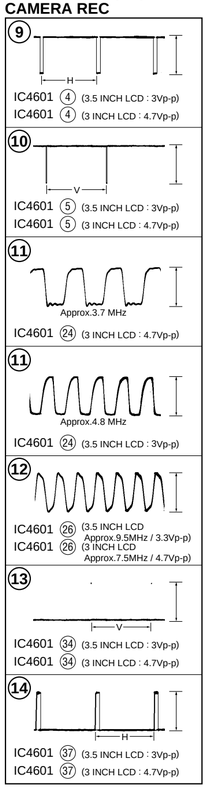
9
H
IC4601 4 (3.5 INCH LCD : 3Vp-p)
IC4601 4 (3 INCH LCD : 4.7Vp-p)
10
V
IC4601 5 (3.5 INCH LCD : 3Vp-p)
IC4601 5 (3 INCH LCD : 4.7Vp-p)
11
Approx.3.7 MHz
IC4601 24 (3 INCH LCD : 4.7Vp-p)
11
Approx.4.8 MHz
IC4601 24 (3.5 INCH LCD : 3Vp-p)
12
IC4601 26 (3.5 INCH LCD Approx.9.5MHz / 3.3Vp-p)
IC4601 26 (3 INCH LCD Approx.7.5MHz / 4.7Vp-p)
13
V
IC4601 34 (3.5 INCH LCD : 3Vp-p)
IC4601 34 (3 INCH LCD : 4.7Vp-p)
14
H
IC4601 37 (3.5 INCH LCD : 3Vp-p)
IC4601 37 (3 INCH LCD : 4.7Vp-p)

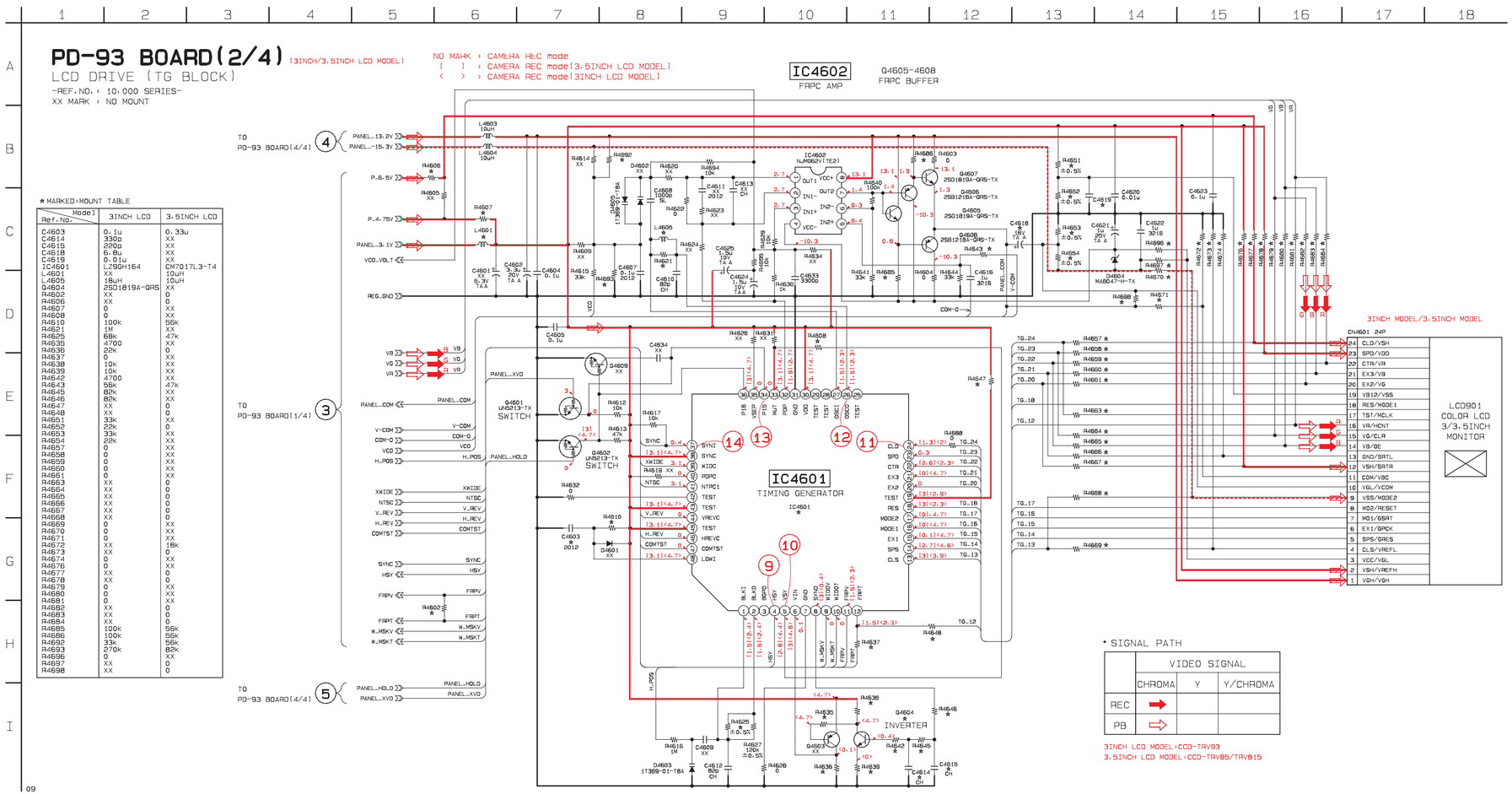

• **For schematic diagrams.**
• Refer to page 4–90 for Printed Wiring Board.

PD-93 BOARD (3/4) (3INCH/3.5INCH LCD MODEL)

BACK LIGHT (BL BLOCK)

-REF.NO. : 10.000 SERIES-
XX MARK : NO MOUNT
NO MARK : CAMERA REC mode

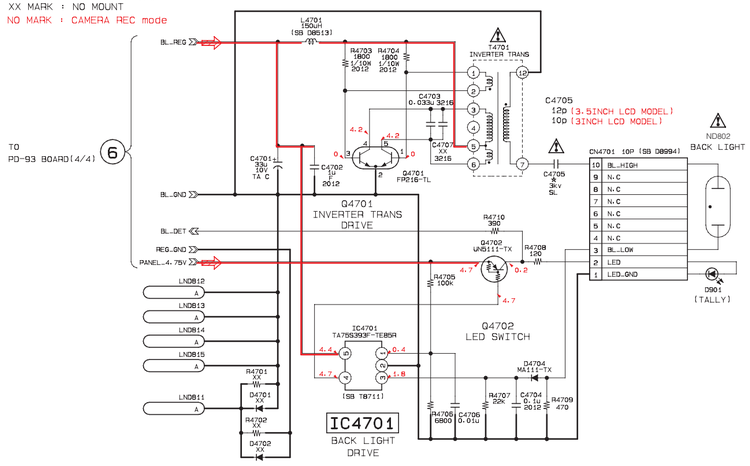

Note:	Note:
The components identified by mark ⚠ or dotted line with mark ⚠ are critical for safety. Replace only with part number specified.	Les composants identifiés par une marque ⚠ sont critiques pour la sécurité. Ne les remplacer que par une pièce portant le numéro spécifié.

3INCH LCD MODEL:CCD-TRV93
3.5INCH LCD MODEL:CCD-TRV85/TRV815

• **For schematic diagrams.**
• Refer to page 4–90 for Printed Wiring Board.

PD-93 BOARD (4/4)

(3INCH/3.5INCH LCD MODEL)

LCD (LCD BLOCK)

-REF.NO. : 10.000 SERIES-
XX MARK : NO MOUNT
NO MARK : CAMERA REC mode

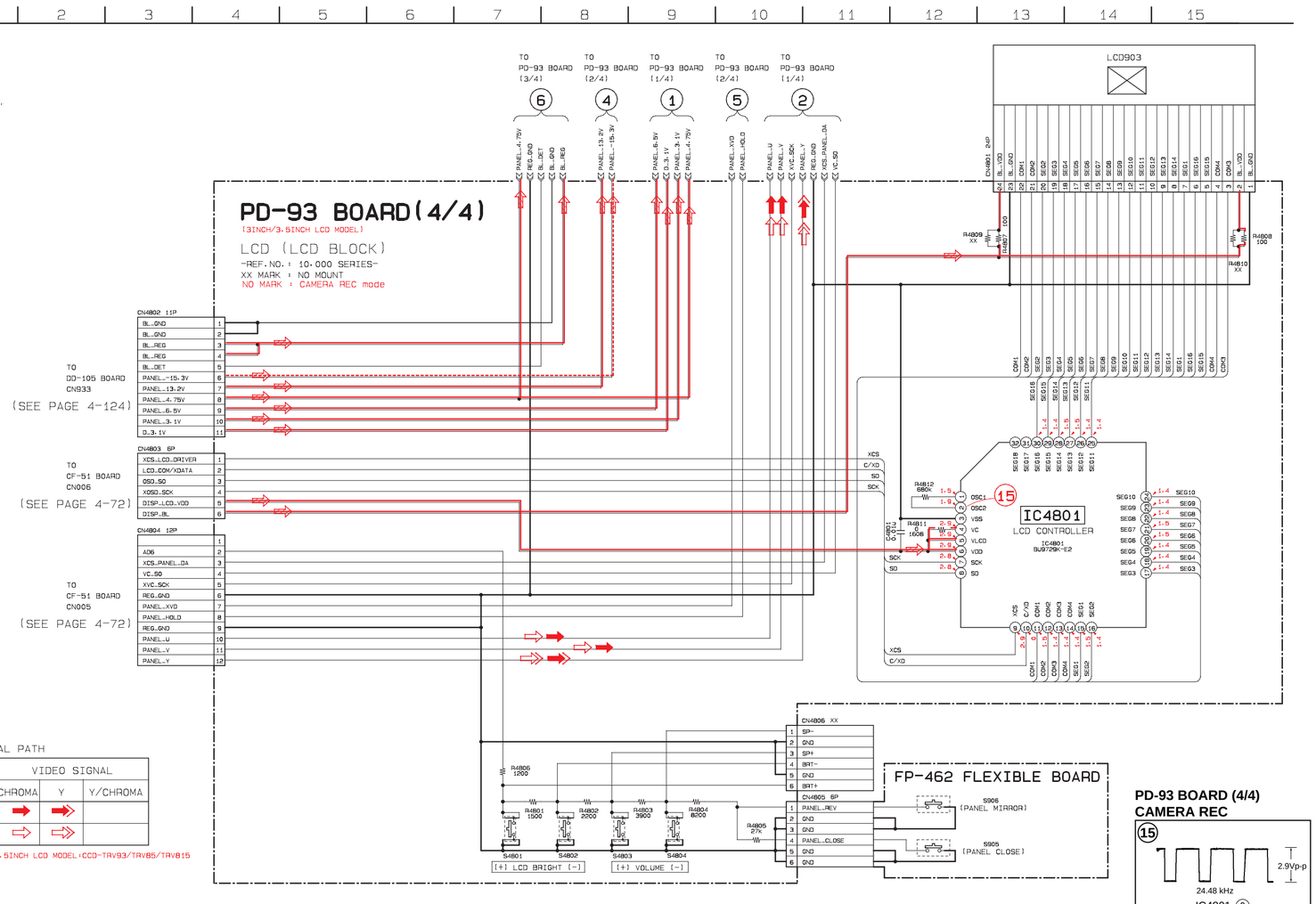

• SIGNAL PATH

	VIDEO SIGNAL		
	CHROMA	Y	Y/CHROMA
REC	➡	➡	
PB	⇨	⇨	

3INCH/3.5INCH LCD MODEL:CCD-TRV93/TRV85/TRV815

PD-93 BOARD (4/4)
CAMERA REC

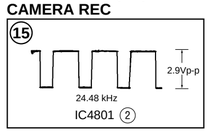

VF-119 BOARD
CAMERA REC

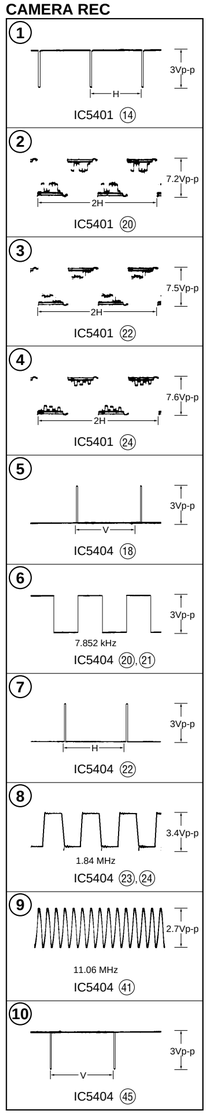

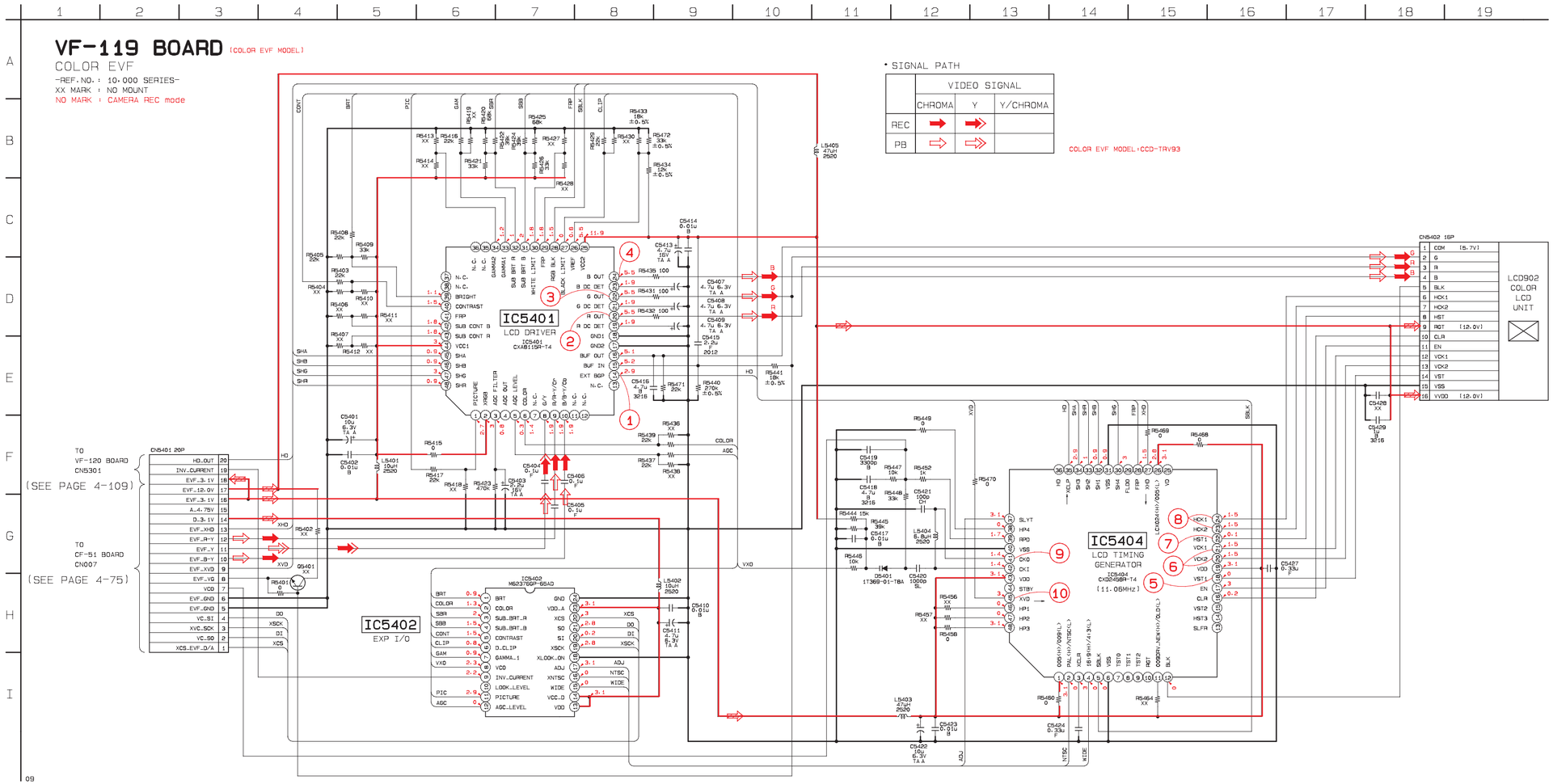

VF-119 (COLOR EVF (COLOR EVF MODEL) PRINTED WIRING BOARD

– Ref No. VF-119 BOARD: 10,000 series –

VF-119 BOARD (SIDE B)

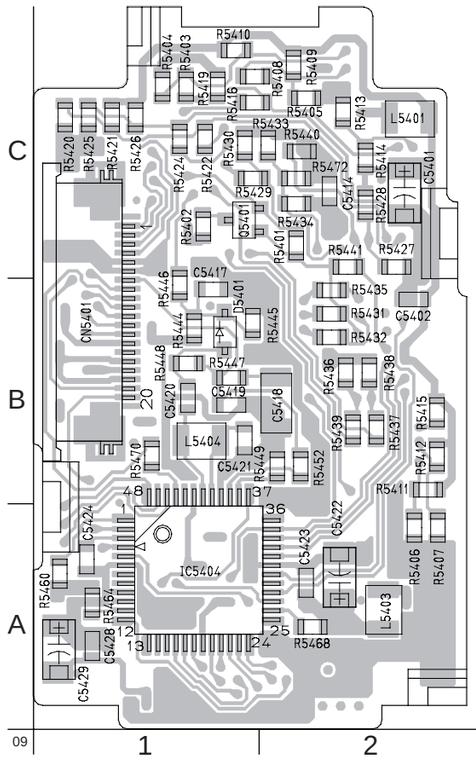

VF-119 BOARD (SIDE A)

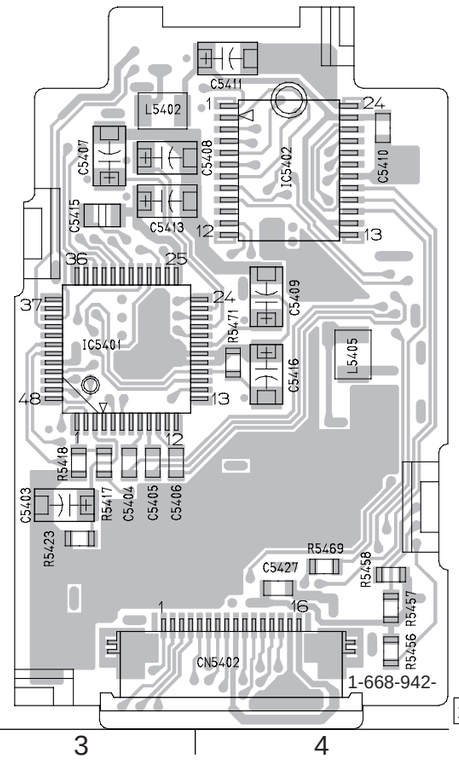

VC-119 BOARD

C5401	C-2	R5410	C-1
C5402	B-2	R5411	B-2
C5403	A-3	R5412	B-2
C5404	B-3	R5414	C-2
C5405	B-3	R5414	C-2
C5406	B-3	R5415	B-2
C5407	C-3	R5416	C-1
C5408	C-3	R5417	B-3
C5409	B-4	R5418	B-3
C5410	C-4	R5418	C-2
C5411	C-4	R5419	C-1
C5413	C-3	R5420	C-1
C5415	C-3	R5421	C-1
C5416	B-4	R5422	C-1
C5417	B-1	R5423	A-3
C5418	B-2	R5424	C-1
C5419	B-1	R5425	C-1
C5420	B-1	R5426	C-1
C5421	B-1	R5427	C-2
C5422	A-2	R5428	C-2
C5423	A-2	R5429	C-1
C5424	A-1	R5430	C-1
C5427	A-4	R5431	B-2
C5428	A-1	R5432	B-2
C5429	A-1	R5433	C-2
		R5434	C-2
CN5401	B-1	R5435	B-2
CN5402	A-4	R5436	B-2
		R5437	B-2
D5401	B-1	R5438	B-2
		R5439	B-2
IC5401	B-3	R5440	C-2
IC5402	C-4	R5441	C-2
IC5404	A-1	R5444	B-1
		R5445	B-1
L5401	C-2	R5446	B-1
L5402	C-3	R5447	B-1
L5403	A-2	R5448	B-1
L5404	B-1	R5449	B-2
L5405	B-4	R5452	B-2
		R5456	A-4
Q5401	C-1	R5457	A-4
		R5458	A-4
R5401	C-2	R5460	A-1
R5402	C-1	R5464	A-1
R5403	C-1	R5468	A-2
R5404	C-1	R5469	A-4
R5405	C-2	R5470	B-1
R5406	A-2	R5471	B-4
R5407	A-2	R5472	C-2
R5408	C-1		
R5409	C-2		

- **For Printed Wiring Boards.**
- This board is four-layer print board. However, the patterns of layers 2 to 3 have not been included in the diagram.

There are few cases that the part isn't mounted in this model is printed on this diagram.

- Chip transistor

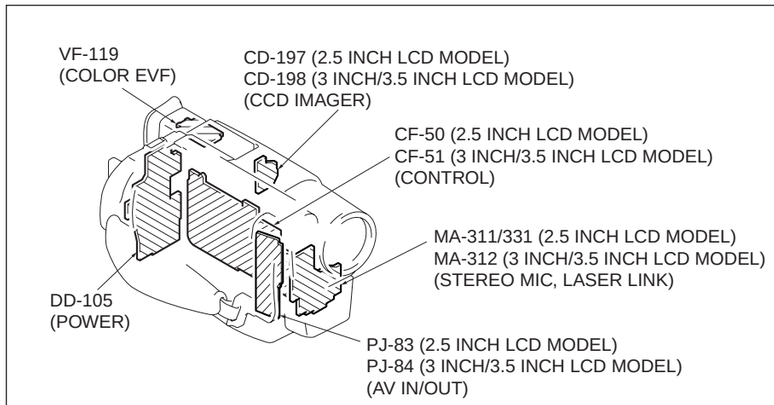

VF-120 (COLOR EVF (COLOR EVF MODEL)), LB-54 (BACK LIGHT) PRINTED WIRING BOARDS

– Ref No. VF-120 BOARD: 10,000 series, LB-54 BOARD: 10,000 series –

VF-120 BOARD

C5301	B-3	R5304	A-3
C5302	A-4	R5305	A-4
C5303	A-4	R5306	A-4
C5304	A-3	R5307	A-3
C5305	A-4	R5309	A-3
C5306	B-4	R5310	A-3
C5307	B-4	R5311	A-3
C5308	B-3	R5312	B-4
C5309	A-3	R5313	B-4
C5310	B-4	R5314	B-3
C5311	A-4	R5315	B-3
C5312	A-3	R5316	A-3
C5313	B-3	R5317	B-3
		R5318	B-4
CN5301	B-4	R5319	A-4
CN5302	A-1	R5320	A-2
		R5321	A-3
D5301	A-3	R5322	A-3
D5302	A-4	R5323	A-4
		R5324	A-4
IC5301	A-4	R5325	B-4
L5301	A-4		
Q5301	B-3		
Q5302	A-2		
Q5303	A-2		
Q5304	A-4		
Q5305	B-4		
R5302	A-2		
R5302	A-4		
R5303	A-1		
R5303	A-3		

VF-120 BOARD (SIDE B)

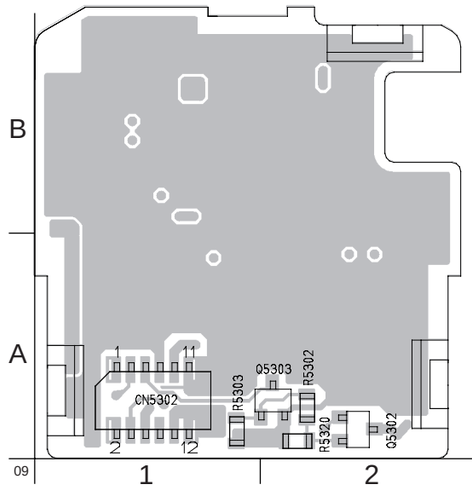

VF-120 BOARD (SIDE A)

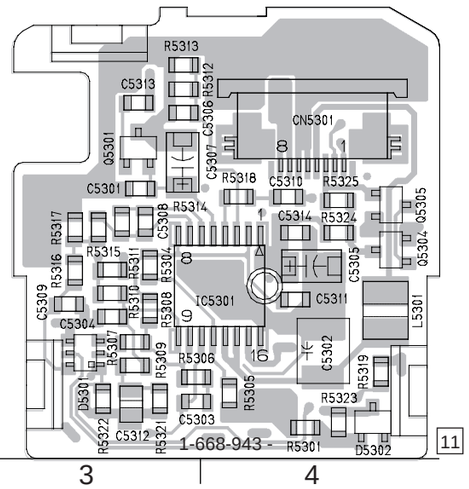

- **For Printed Wiring Boards.**
- This board is four-layer print board. However, the patterns of layers 2 to 3 have not been included in the diagram.

There are few cases that the part isn't mounted in this model is printed on this diagram.

- Chip diode

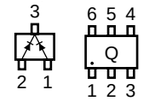

Chip transistor

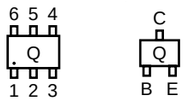

LB-54 BOARD

C5351	B-4
C5352	B-4
C5353	B-3
C5354	A-4
C5355	A-4
C5356	B-4
CN5351	B-3
D5351	B-2
L5351	B-3
L5352	B-4
ND5351	A-1
Q5351	A-4
R5351	B-3
T5351	A-3

LB-54 BOARD (SIDE B)

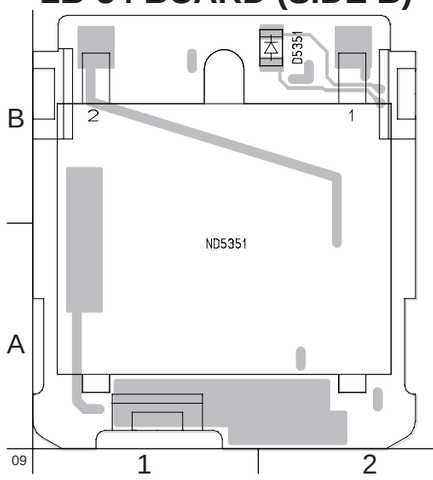

LB-54 BOARD (SIDE A)

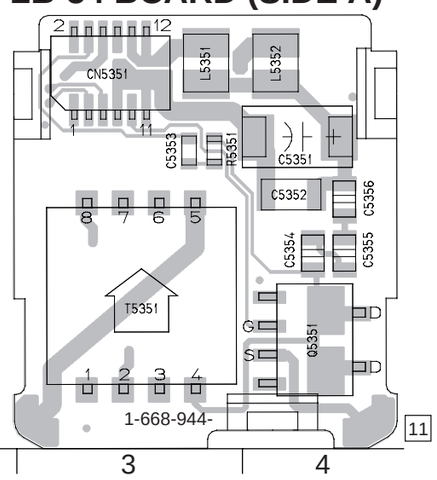

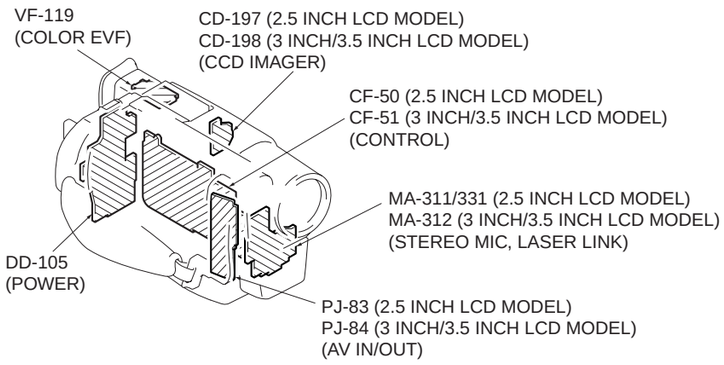

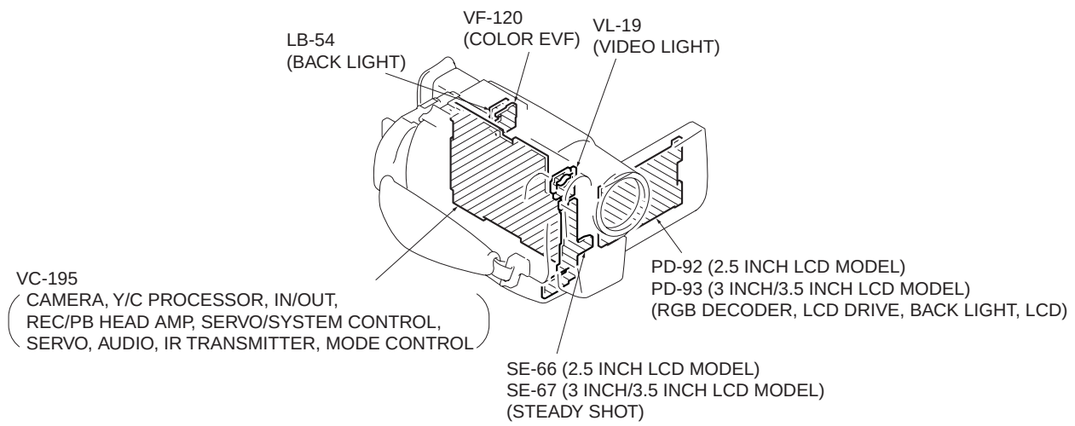

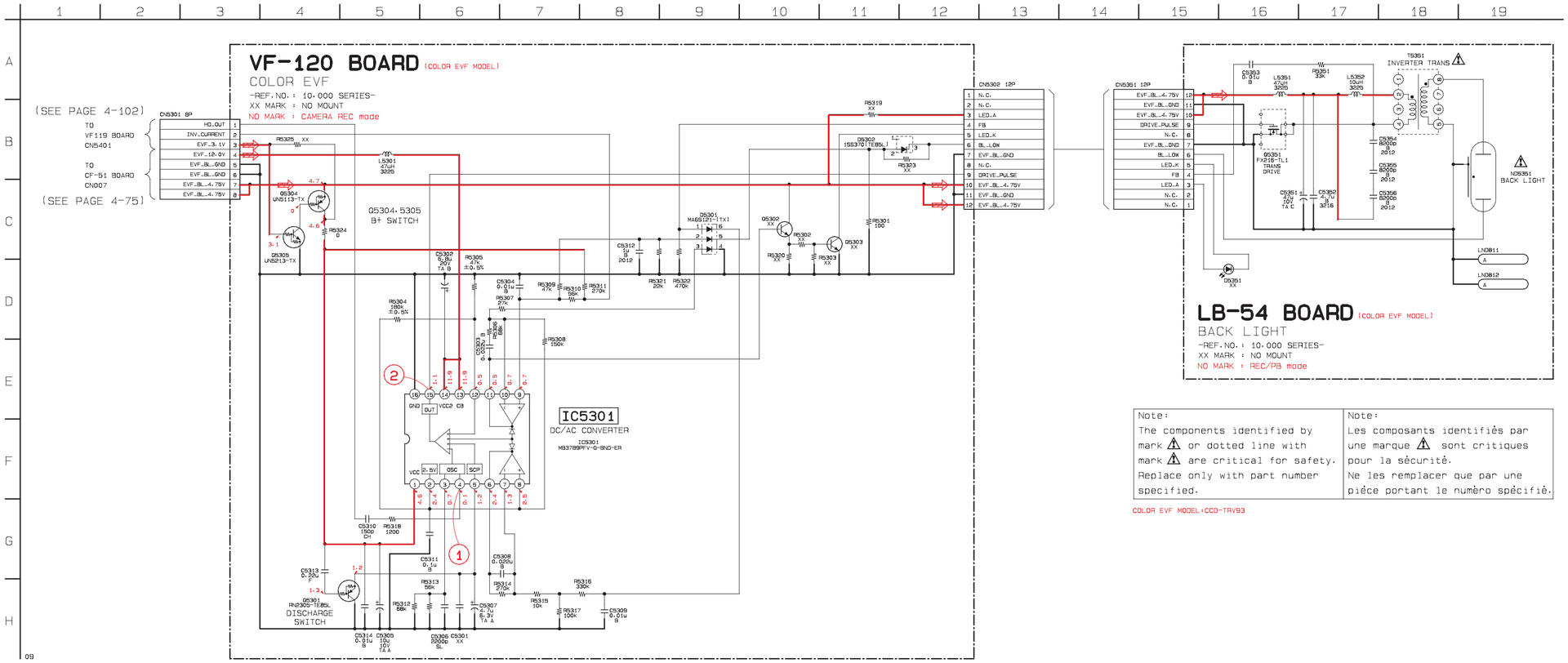

VF-120 BOARD
CAMERA REC

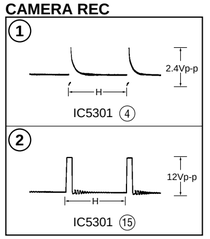

Note:	Note:
The components identified by mark ⚠ or dotted line with mark ⚠ are critical for safety. Replace only with part number specified.	Les composants identifiés par une marque ⚠ sont critiques pour la sécurité. Ne les remplacer que par une pièce portant le numéro spécifié.

COLOR EVF MODEL:CCD-TRV93

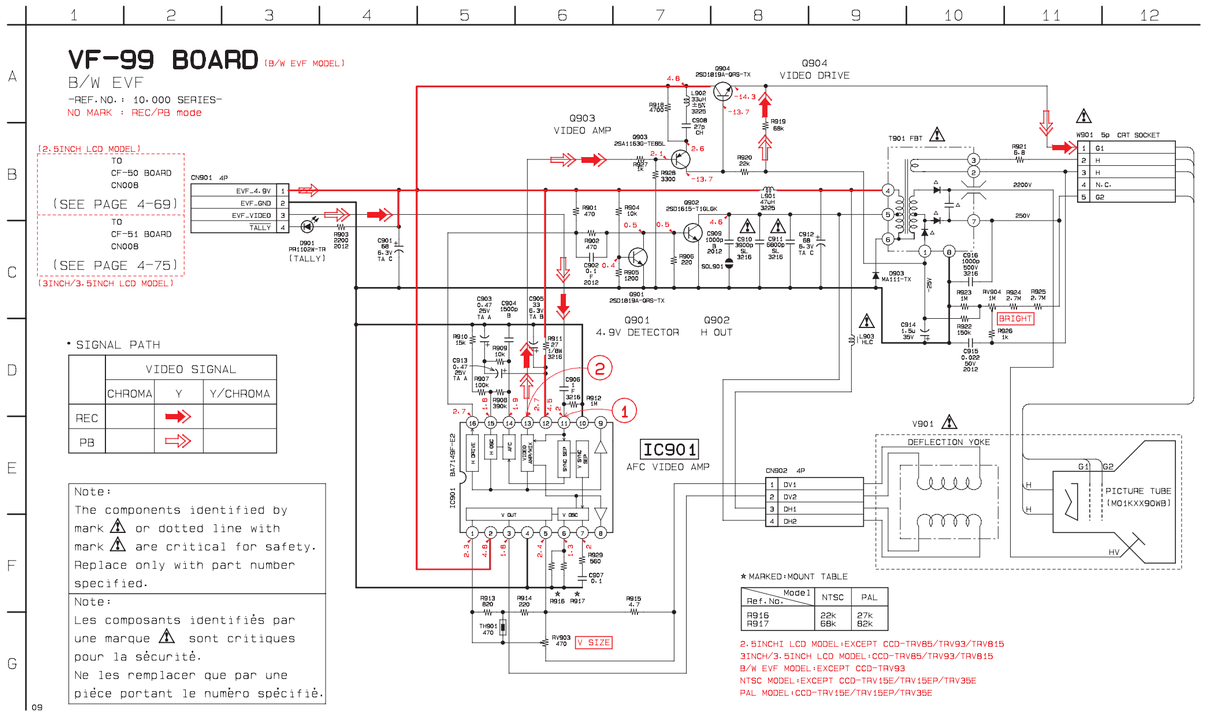

VF-99 BOARD
CAMERA REC

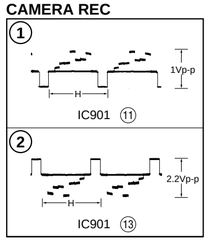

VF-99 (B/W EVF (B/W EVF MODEL)) PRINTED WIRING BOARD

– Ref No. VF-99 BOARD: 10,000 series –

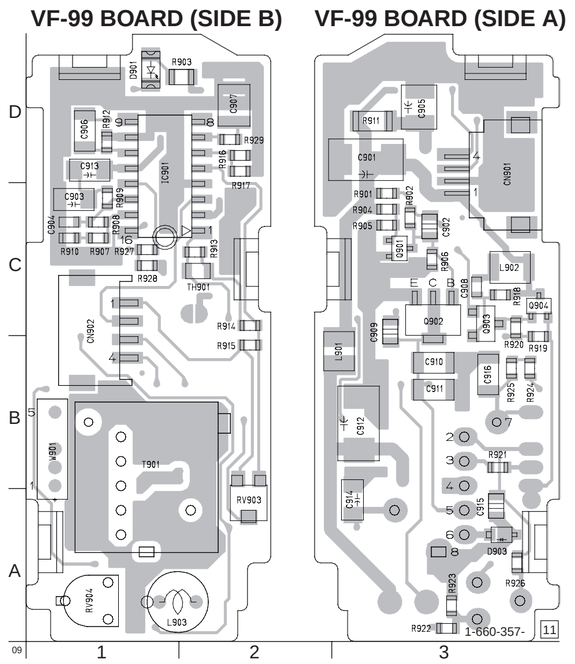

VF-99 BOARD

C901	D-3	R919	B-3
C902	C-3	R920	C-3
C903	C-1	R921	B-3
C904	C-1	R922	A-3
C905	D-3	R923	A-3
C906	D-1	R924	B-3
C907	D-2	R925	B-3
C908	C-3	R926	A-3
C909	C-3	R927	C-1
C910	B-3	R928	C-1
C911	B-3	R928	D-2
C912	B-3		
C913	D-1	RV903	A-2
C914	A-3	RV904	A-1
C915	A-3		
C916	B-3	T901	B-1
		TH901	C-2
CN901	D-3		
CN902	C-1	W901	B-1
D901	D-1		
D903	A-3		
IC901	D-1		
L901	B-3		
L902	C-3		
L903	A-1		
Q901	C-3		
Q902	C-3		
Q903	C-3		
Q904	C-3		
R901	C-3		
R902	C-3		
R903	D-2		
R904	C-3		
R905	C-3		
R906	C-3		
R907	C-1		
R908	C-1		
R909	C-1		
R910	C-1		
R911	D-3		
R912	D-1		
R913	C-2		
R914	C-2		
R915	B-2		
R916	D-2		
R917	D-2		
R918	C-3		

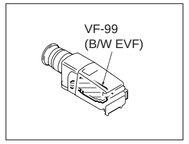

• **For Printed Wiring Boards.**
• This board is four-layer print board. However, the patterns of layers 2 to 3 have not been included in the diagram.

There are few cases that the part isn't mounted in this model is printed on this diagram.

• Chip transistor

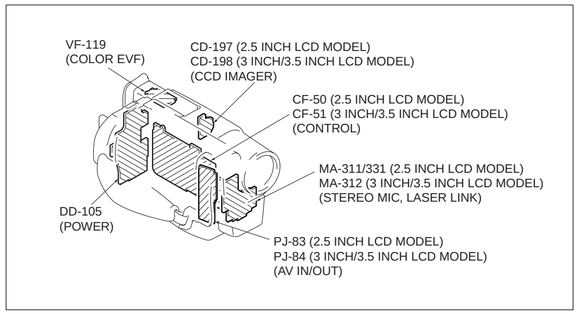

- **For Printed Wiring Boards.**
- This board is four-layer print board. However, the patterns of layers 2 to 3 have not been included in the diagram.

There are few cases that the part isn't mounted in this model is printed on this diagram.

- Chip transistor

Chip diode

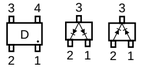

DD-105 (POWER) PRINTED WIRING BOARD
– Ref No. DD-105 BOARD: 2,000 series –

DD-105 BOARD

C801	E-3	L801	D-7	R823	D-7
C802	E-3	L802	D-7	R824	D-2
C803	D-3	L803	D-8	R825	D-4
C804	E-3	L804	E-9	R826	D-4
C805	E-3	L805	B-7	R827	E-3
C806	E-3	L806	C-8	R828	F-3
C807	E-2	L807	C-7	R829	D-2
C808	E-3	L808	B-8	R830	D-2
C809	D-2	L809	C-7	R831	F-4
C810	D-3	L810	B-4	R832	D-4
C811	D-2	L811	B-3	R833	D-2
C812	D-4	L812	B-3	R834	D-2
C813	D-2	L813	B-3	R835	D-4
C814	E-8	L814	A-3	R836	D-4
C815	C-4	L815	A-3	R837	D-2
C816	E-9	L816	B-3	R838	D-3
C817	E-8	L817	A-3	R839	C-2
C819	C-3	L818	A-2	R840	C-3
C820	C-3	L819	A-3	R841	C-3
C821	C-2	L820	D-8	R842	E-2
C822	E-8			R843	C-2
C823	C-4	LF801	D-7	R849	E-2
C824	C-2			R850	E-2
C825	B-3	PS801	F-3	R852	D-2
C826	D-8	PS802	F-2	R853	D-2
C827	E-2	PS803	F-3	R854	D-2
C828	E-2	PS804	F-2	R854	D-2
C829	E-2	PS805	F-2	R859	E-3
C830	D-2	PS806	F-3	R864	E-3
C831	E-2			R865	A-2
C832	B-3	Q801	F-4	R866	B-2
C833	B-3	Q802	E-4	R867	E-2
C834	C-4	Q803	E-3	R868	A-2
C836	B-2	Q804	F-3	R870	A-7
C837	C-2	Q805	F-3	R871	A-7
C838	C-3	Q806	C-2	R872	B-6
C840	D-8	Q807	C-3	R873	A-5
C841	B-4	Q808	C-3	R874	B-5
C843	C-4	Q809	B-3	R875	A-2
C844	A-3	Q810	C-2	R876	B-5
C846	B-3	Q812	C-3	R877	A-7
C847	B-7	Q813	C-2	R878	A-2
C848	B-7	Q814	C-2	R879	B-6
C849	A-2	Q815	C-2	R880	B-6
C850	A-3	Q817	C-3	R881	B-6
C851	B-4	Q819	D-8	R882	B-6
C852	B-8	Q820	E-3	R883	A-8
C853	B-7	Q823	A-2	R884	B-8
C854	B-3	Q824	E-2	R885	B-7
C855	A-3	Q826	A-7	R887	B-8
C856	E-3	Q827	A-2	R888	B-8
C857	A-2	Q828	B-5	R889	A-7
C860	A-6	Q829	B-6	R890	A-7
C861	A-7	Q830	B-6	R891	A-8
C862	A-2	Q831	A-7	R892	A-8
C863	B-6	Q832	B-6	R893	B-8
C864	A-5	Q833	A-2	R894	A-7
C866	A-6	Q834	B-6	R895	A-6
C867	A-7	Q835	A-8	R896	A-8
C868	B-6	Q836	A-8	R897	A-8
C869	A-6	Q837	A-7	R898	A-7
C871	B-2	Q838	A-8	R899	A-7
C872	F-4	Q839	B-8	R900	A-6
C873	A-2	Q840	A-8	R901	A-6
C874	A-7	Q841	A-7	R902	A-6
C875	B-2	Q842	A-7	R903	A-8
C876	C-6	Q843	A-7	R904	A-8
C877	D-6	Q844	A-8	R905	A-8
C885	A-6	Q845	A-8	R906	A-8
		Q846	A-7	R907	A-8
CN801	C-6	Q847	A-6	R908	B-2
CN931	C-5	Q848	A-8	R910	B-2
CN932	F-6	Q849	A-7	R911	B-2
CN933	A-4	Q850	A-8	R912	B-2
CN934	D-9	Q851	E-4	R913	E-6
CN935	G-7	Q852	B-2	R914	D-2
		Q853	B-2	R915	E-2
D801	B-3	Q854	B-2	R916	A-7
D802	C-3	Q855	B-2	R917	A-7
D803	C-2	Q856	A-6	R918	A-2
D804	C-2	Q932	G-3	R919	A-7
D805	C-3	Q933	G-3	R920	A-7
D806	E-2	Q934	G-3	R924	C-5
D807	D-8			R932	G-3
D809	B-7	R801	E-2	R933	F-7
D810	B-2	R802	E-3	R934	F-6
D812	B-3	R803	E-3	R935	F-7
D813	F-4	R804	D-3	R936	F-6
D814	F-4	R805	D-3	R937	F-7
D815	F-3	R807	E-3	R938	F-7
D816	E-3	R808	E-2	R939	F-6
D817	F-3	R808	E-3	R940	F-3
D818	D-2	R809	D-3	R941	G-3
D819	E-3	R810	E-2	R942	E-9
D838	E-9	R811	D-2	R943	G-3
D932	G-2	R812	D-2		
D933	F-4	R813	F-4	T801	B-7
D934	G-3	R814	D-4		
D935	F-3	R815	D-3		
D936	G-3	R816	D-4		
		R817	D-3		
FB931	D-9	R818	D-2		
FB932	E-9	R819	D-2		
FB933	D-9	R820	D-3		
FB934	D-9	R821	D-2		
		R822	E-3		
IC801	D-3	R822	D-7		
IC802	E-2	R822	D-8		

POWER
DD-105

DD-105 BOARD (SIDE B)

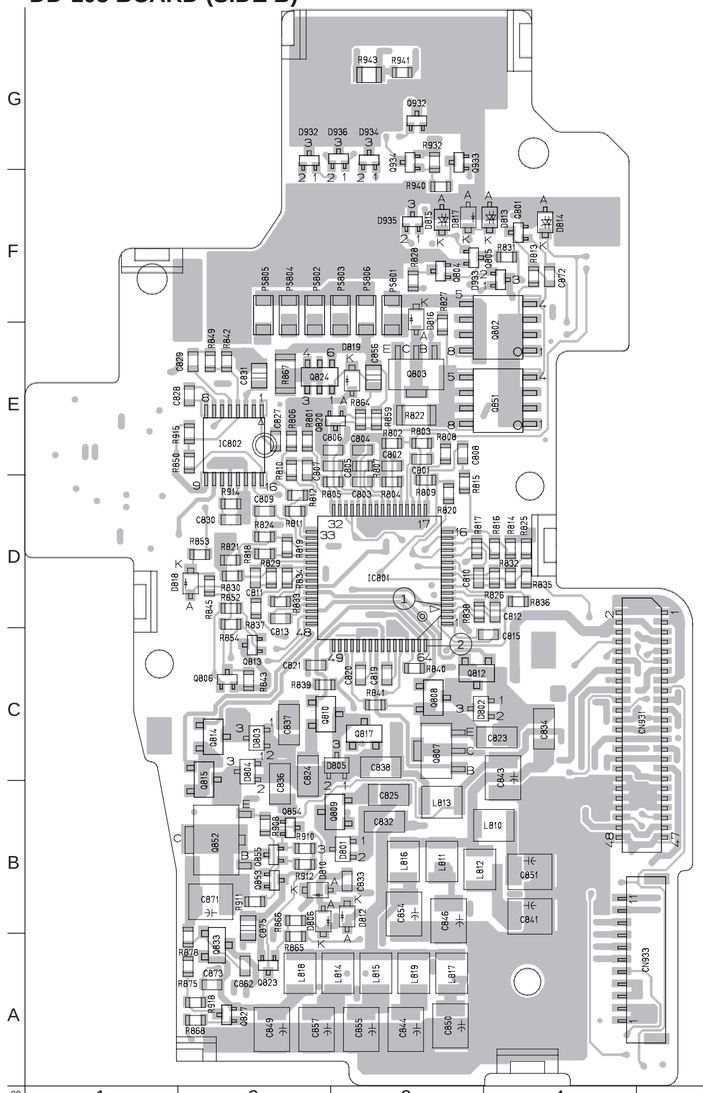

DD-105 BOARD (SIDE A)

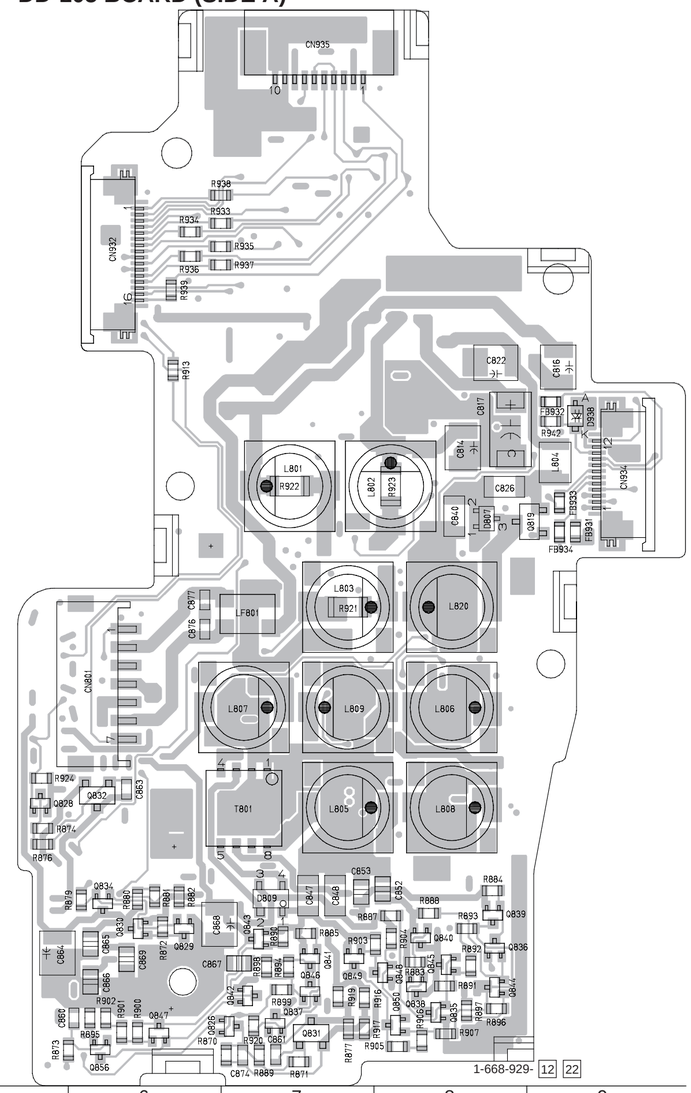

DD-105 BOARD

POWER

-REF.NO. : 2-000 SERIES-
XX MARK : NO MOUNT
NO MARK : CAMERA REC mode(LCD ON)
( ) : CAMERA REC mode(COLOR EVF ON)
< > : CAMERA REC mode(B/W EVF ON)

DD-105 BOARD
CAMERA REC

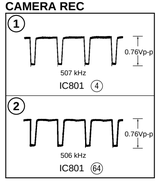

SECTION 5
ADJUSTMENTS

Refer to page 3 as Table for distinction functions of models and classification

5-1. CAMERA SECTION ADJUSTMENTS

1-1. PREPARATIONS BEFORE ADJUSTMENT (CAMERA SECTION)

1-1-1. List of Service Tools

- Oscilloscope
- Color monitor
- Vectorscope
- Adjusting driver
- Regulated power supply
- Digital voltmeter

Ref. No.	Name	Parts Code	Usage
J-1	Filter for color temperature correction (C14)	J-6080-058-A	Auto white balance adjustment/check White balance adjustment/check
J-2	ND filter 1.0	J-6080-808-A	White balance check
	ND filter 0.3	J-6080-818-A	White balance check
J-3	Pattern box PTB-450	J-6082-200-A	
J-4	Color chart for pattern box	J-6020-250-A	
J-5	Adjusting remote commander (RM-95-remodeled partly) Note 1	J-6082-053-B	
J-6	Siemens star	J-6080-875-A	For checking the flange back
J-7	Multi CPC jig	J-6082-311-A	For adjusting LCD block
J-8	CPC-7 jig	J-6082-382-A	For the color viewfinder adjustment For adjusting the video section
J-9	Power code Note 2	J-6082-223-A	For connecting the battery terminal and DC power supply
J-10	AFM DEV jig	J-6082-312-A	For adjusting the deviation
J-11	Clear chart	J-6080-621-A	
J-12	Extension cable (16P, 0.5 mm)	J-6082-357-A	For extension between the CD-197/198 board (CN401) and VC-195 board (CN501)
J-13	IR receiver jig	J-6082-383-A	For adjusting the IR transmitter
J-14	Extension cable (48P, 0.8 mm)	J-6082-188-A	For extension between the DD-105 board (CN401) and VC-195 board (CN914)

Note 1: If the micro processor IC in the adjusting remote commander is not the new micro processor (UPD7503G-C56-12), the pages cannot be switched. In this case, replace with the new micro processor (8-759-148-35).

Note 2: Connect the adjusting remote commander to the LANC jack, and set the HOLD switch to the "ADJ" side.

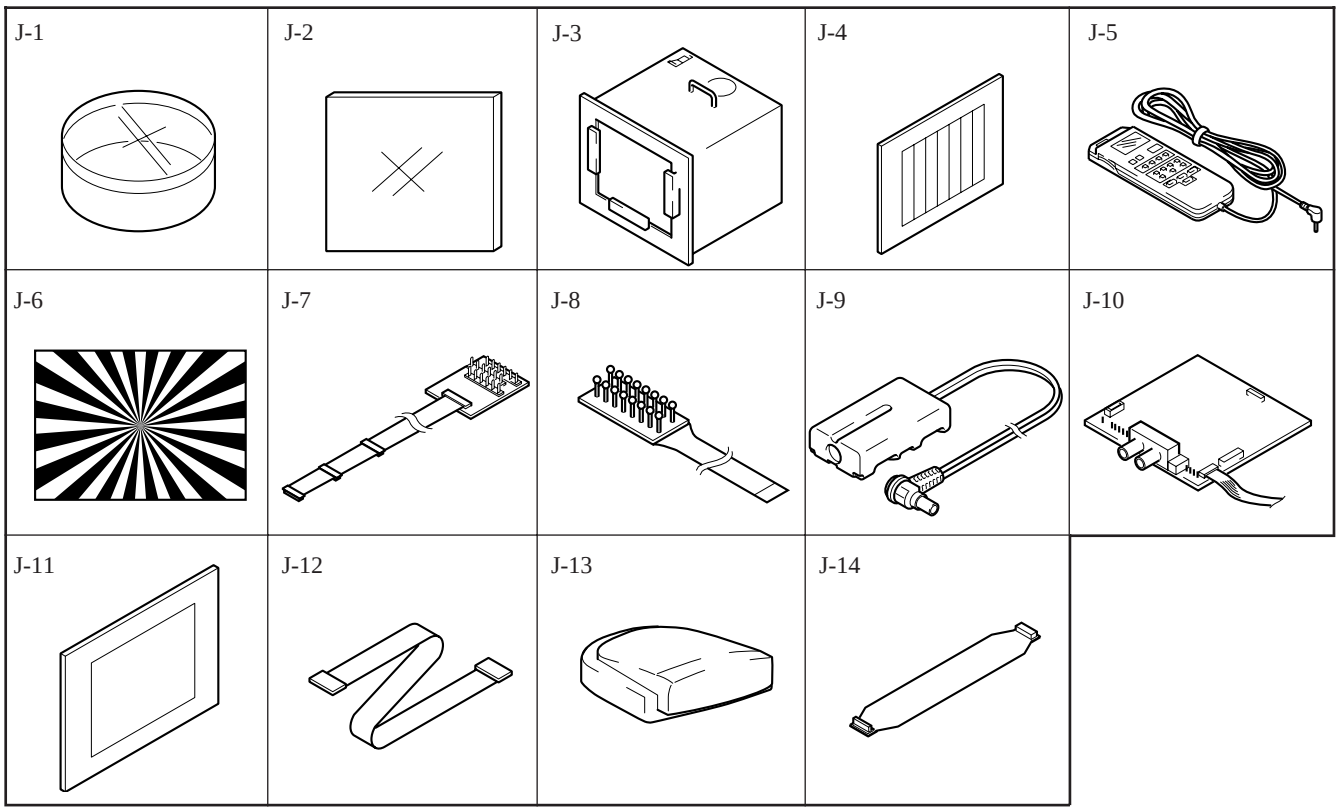

Fig. 5-1-1.

1-1-2. Preparations

Note 1: For details of how remove the cabinet and boards, refer to "2. DISASSEMBLY".

Note 2: When performing only the adjustments, the lens block and boards need not be disassembled.

1) Connect the equipment for adjustments according to Fig. 5-1-3, 4.
2) By setting the "Forced Camera Power ON mode", the camera power can be turned ON even if the front panel block (MA-311/312/331 board, power switch, microphone unit) has been removed. When removing the front panel block disconnect the following connector.
   1. VC-195 board CN903 (23P 0.5mm)
3) The intelligent accessory shoe (Intelligent accessory shoe model) or video light (Video light model) need not be assembled. If removing it. disconnect the following connector.
   1. VC-195 board CN909 (10P, 0.5mm)

Note 3: As removing the cabinet (R) (removing the VC-195 board CN911) means removing the lithium 3V power supply (CF-50/51 board) , data such as date, time, user-set menus will be lost. After completing adjustments, reset these data. If the cabinet (R) has been removed, the self-diagnosis data, data on history of use (total drum rotation time etc.) will be lost. Before removing, note down the self-diagnosis data and data on the history use. (Refer to the "Service Mode" of "VIDEO SECTION ADJUSTMENT" for the data on the history use.)

Note 4: Setting the "Forced Camera Power ON" Mode
1) Select page: 0, address: 01, and set data: 01.
2) Select page: D, address: 10, set data: 01, and press the PAUSE button of the adjusting remote commander.
The above procedure will enable the camera power to be turned on with the front panel block removed. After completing adjustments, be sure to exit the "Forced Camera Power ON Mode".

Note 5: Exiting the "Forced Camera Power ON" Mode
1) Select page: 0, address: 01, and set data: 01.
2) Select page: D, address: 10, set data: 00, and press the PAUSE button of the adjusting remote commander.
3) Select page: 0, address: 01, and set data: 00.

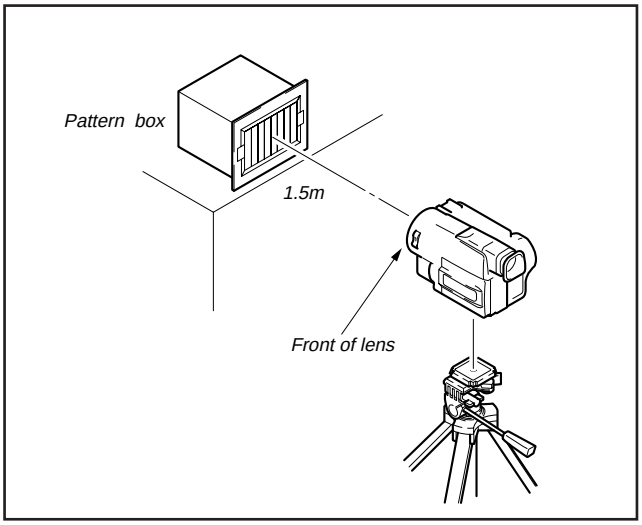

Fig. 5-1-2.

2.5 INCH LCD MODEL

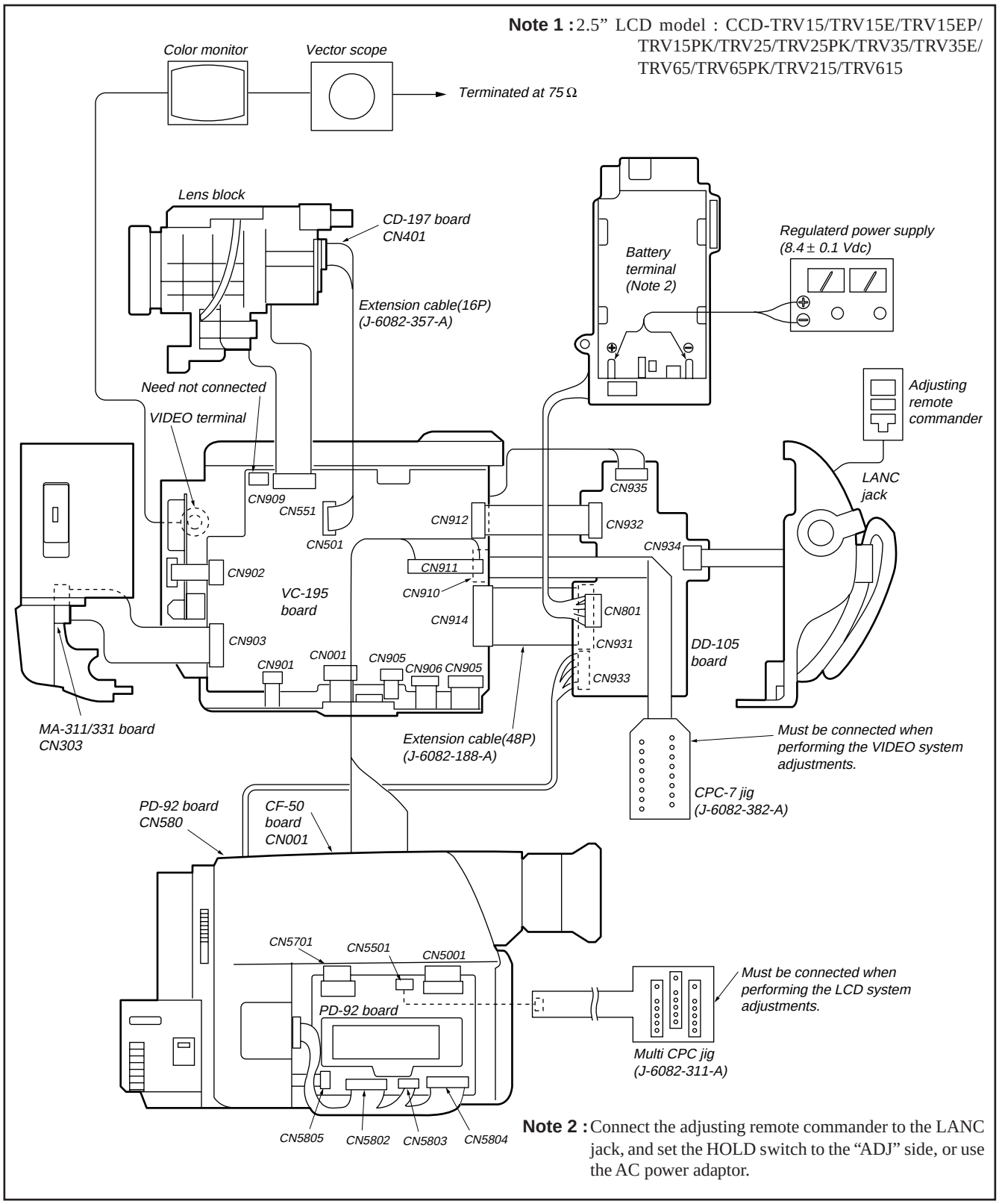

Fig. 5-1-3.

3/3.5 INCH LCD MODEL

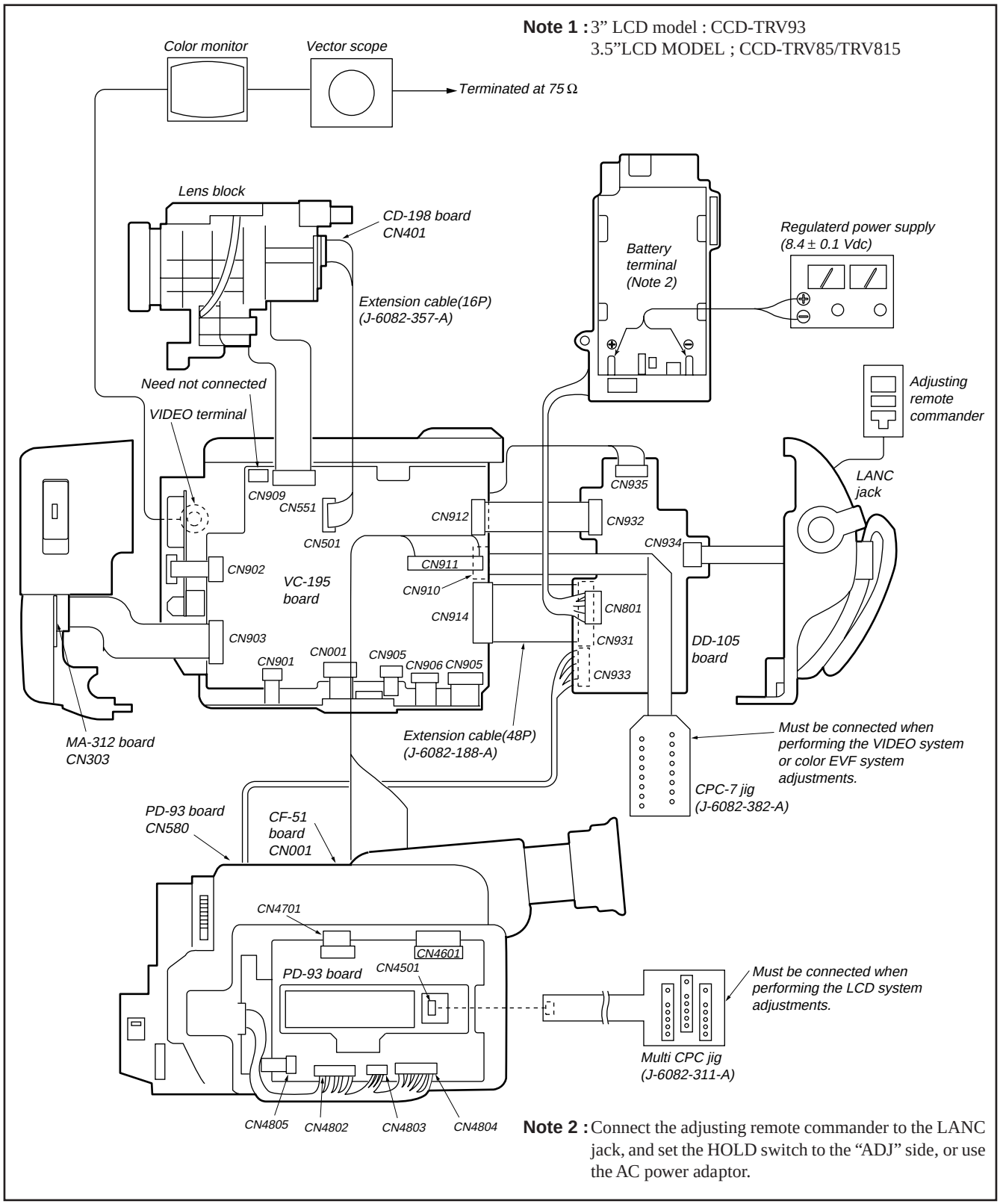

Fig. 5-1-4.

1-1-3.Precaution

1. Setting the Switch

Unless otherwise specified, set the switches as follows and perform adjustments without loading cassette.

1. POWER switch (MA-311/312/331 board) ..... CAMERA
2. NIGHT SHOT switch (Lens Block) ..... OFF
   (Night shot model)
3. VIDEO LIGHT switch (MA-312 board) ..... OFF
   (Video light model)
4. DEMO MODE (Menu display) ..... OFF
5. DIGITAL ZOOM (Menu display) ..... OFF
6. STEADY SHOT (Menu display) ..... OFF
7. DISPLAY (Menu display) ..... V-OUT/LCD
8. FOCUS switch (MF-8500/MR-8500)
   (Manual Focus model) ..... MANUAL
9. PROGRAM AE (CF-50/51 board) ..... Auto
10. BACK LIGHT (CF-50/51 board) ..... OFF
11. PICTURE EFECT (CF-50/51 board) ..... OFF
12. 16 : 9 WIDE (MENU display) ..... OFF

2. Adjusting Procedure

Adjust in the given order.

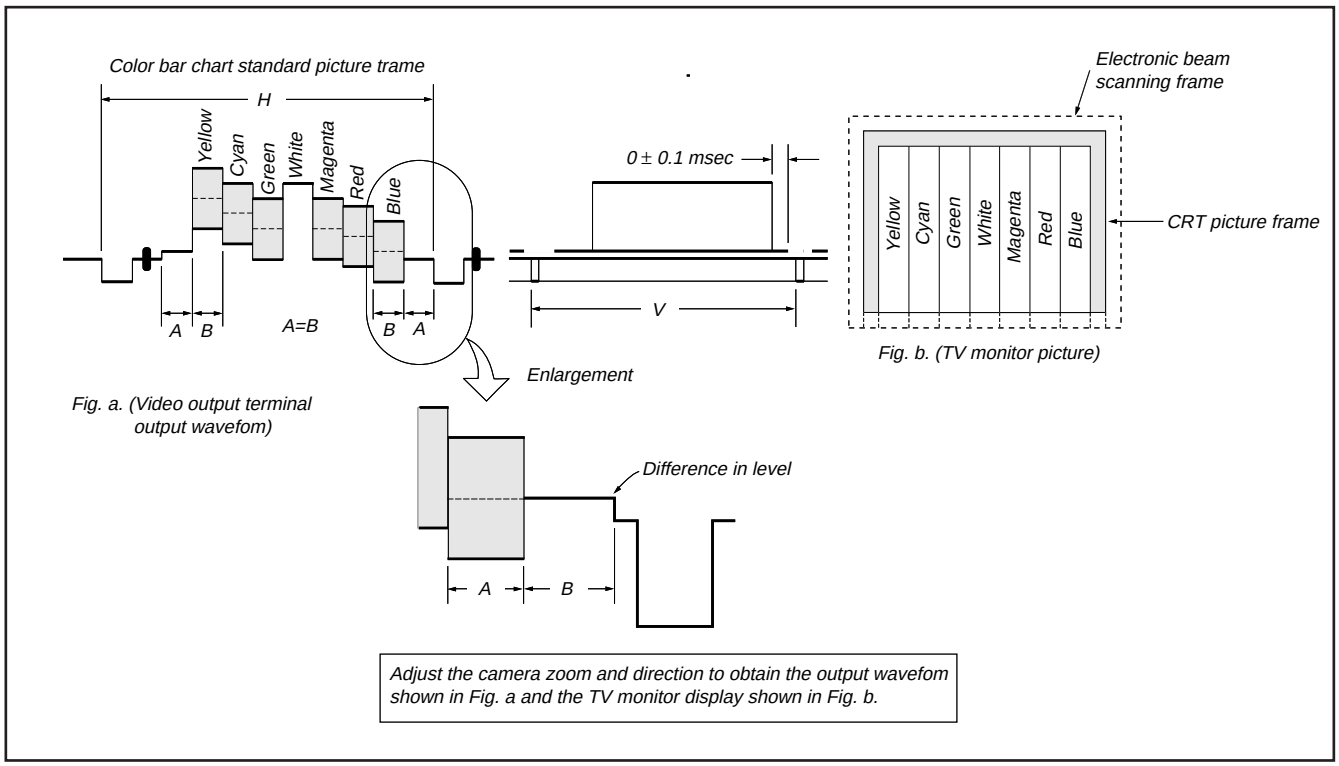

Fig. 5-1-5.

3. Subject

1) Color bar chart (Standard picture frame)
   Adjust the picture frame as shown in Fig. 5-1-5. if adjustments are performed using the color bar chart.
   (Standard picture frame)
2) White pattern (Standard picture frame)
   Remove the color bar chart from the pattern box, and insert a clear chart in its place. (Do not perform zoom operations during this time.)
3) Chart for flange back adjustment
   Combine a white A0 size (1189 mm x 841 mm) paper to a black one, and make the chart shown in Fig. 5-1-6.

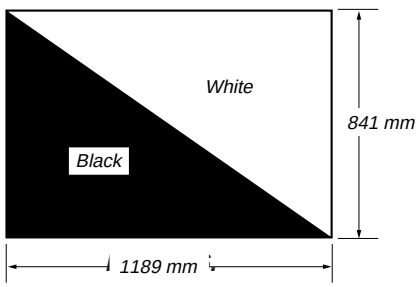

Note : Use the non-reflecting and non-glazing vellum paper whose size is more than A0, and make the boundary between white and black to be smoothly flat.

1-1-4. Adjusting Remote Commander

The adjusting remote commander is used for changing the calculation coefficient in signal processing, EVR data, etc. The adjusting remote commander performs bi-directional communication with the unit using the remote commander signal line (LANC). The resultant data of this bi-directional communication is written in the non-volatile memory.

1. Using the adjusting remote commander

1) Connect the adjusting remote commander to the LANC terminal.
2) Adjust the HOLD switch of the adjusting remote commander to "HOLD" (SERVICE position).

If it has been properly connected, the LCD on the adjusting remote commander will display as shown in Fig. 5-1-7.

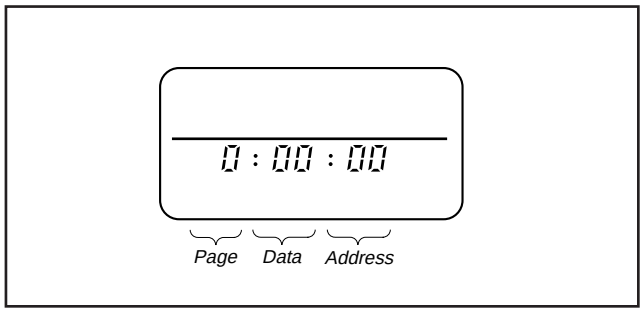

Fig. 5-1-7.

3) Operate the adjusting remote commander as follows.
   - Changing the page
     The page increases when the EDIT SEARCH+ button is pressed, and decreases when the EDIT SEARCH– button is pressed. There are altogether 16 pages, from 0 to F.

Hexadecimal notation	0	1	2	3	4	5	6	7	8	9	A	B	C	D	E	F
LCD Display	0	1	2	3	4	5	6	7	8	9	A	b	c	d	E	F
Decimal notation conversion value	0	1	2	3	4	5	6	7	8	9	10	11	12	13	14	15

Table 5-1-1.

   - Changing the address
     The address increases when the FF (▶▶) button is pressed, and decreases when the REW (◀◀) button is pressed. There are altogether 256 addresses, from 00 to FF.
   - Changing the data (Data setting)
     The data increases when the PLAY (►) button is pressed, and decreases when the STOP (■) button is pressed.
     There are altogether 256 data, from 00 to FF.
   - Writing the adjustment data
     The PAUSE button must be pressed to write the adjustment data (D, E, F page) in the nonvolatile memory.
     (The new adjustment data will not be recorded in the nonvolatile memory if this step is not performed.)
4) Select page: 0, address: 01, and set the data to 01, and enables Page D and E, F to be adjusted.
5) After completing all adjustments, set data: 00 to page: 0, address: 01 and turn off the main power supply (8.4V) once.

2. Precautions upon using the adjusting remote commander

Mishandling of the adjusting remote commander may erase the correct adjustment data at times. To prevent this, it is recommended that all adjustment data be noted down before beginning adjustments and new adjustment data after each adjustment.

1-1-5. Data Processing

The calculation of the DDS display and the adjusting remote commander display data (hexadecimal notation) are required for obtaining the adjustment data of some adjustment items. In this case, after converting the hexadecimal notation to decimal notation, calculate and convert the result to hexadecimal notation, and use it as the adjustment data. Table 5-1-2. indicates the hexadecimal notation-the decimal notation calculation table.

Hexadecimal notation-Decimal notation

② ↓

The lower digits of the hexadecimal notation / The upper digits of the hexadecimal notation	0	1	2	3	4	5	6	7	8	9	A (A)	B (b)	C (c)	D (d)	E (E)	F (F)
0	0	1	2	3	4	5	6	7	8	9	10	11	12	13	14	15
1	16	17	18	19	20	21	22	23	24	25	26	27	28	29	30	31
2	32	33	34	35	36	37	38	39	40	41	42	43	44	45	46	47
3	48	49	50	51	52	53	54	55	56	57	58	59	60	61	62	63
4	64	65	66	67	68	69	70	71	72	73	74	75	76	77	78	79
5	80	81	82	83	84	85	86	87	88	89	90	91	92	93	94	95
6	96	97	98	99	100	101	102	103	104	105	106	107	108	109	110	111
7	112	113	114	115	116	117	118	119	120	121	122	123	124	125	126	127
8	128	129	130	131	132	133	134	135	136	137	138	139	140	141	142	143
9	144	145	146	147	148	149	150	151	152	153	154	155	156	157	158	159
A (A)	160	161	162	163	164	165	166	167	168	169	170	171	172	173	174	175
①→ B (b)	176	177	178	179	180	181	182	183	184	185	186	187	188	189	190	191
C (c)	192	193	194	195	196	197	198	199	200	201	202	203	204	205	206	207
D (d)	208	209	210	211	212	213	214	215	216	217	218	219	220	221	222	223
E (E)	224	225	226	227	228	229	230	231	232	233	234	235	236	237	238	239
F (F)	240	241	242	243	244	245	246	247	248	249	250	251	252	253	254	255

Note: ( ) indicate the adjusting remote commander display.

(Example) In the case that the DDS display and the adjusting remote commander display are BD (bd).
As the upper digit of the hexadecimal notation is B (b), and the lower digit is D (d), the intersection "189" of the ① and ② in the above table is the decimal notation to be calculated.

Table 5-1-2.

1-2. INITIALIZATION OF D, E, F PAGE DATA

1. Initializing the D,E,F Page Data

Note 1: If "Initializing the D, E, F Page Data" is performed, all data of the D page, E page and F page will be initialized. (It is impossible to initialize a single page.)

Note 2: If the D,E,F page data has been initialized, "Modification of D, E, F Page Data" and all adjustments need to be performed again.

Note 3: < > : NTSC model (CCD-TRV15/TRV15PK/TRV25/TRV25PK/TRV35/TRV65/TRV65PK/TRV85/TRV93/TRV215/TRV815/TRV815)

[ ] : PAL model (CCD-TRV15E/TRV15EP/TRV35E)

Adjusting page	D
Adjusting Address	00 to 6F
Adjusting page	F
Adjusting Address	00 to FF
Adjusting page	E
Adjusting Address	00 to FF

Initializing Method:

1) Select page: 0, address: 01, and set data: 01.
2) Select page: 2, address: 00, and set data: 55 <NTSC> or data : 51 [PAL].
3) Select page: 2, address: 01, set data: 55<NTSC> or data : 51 [PAL], and press the PAUSE button of the adjusting remote commander.
4) Select page: 2, address: 02, and check that the data is 01.
5) Select page: 3, address: 00, and set data: 29.
6) Select page: 3, address: 01, set data: 29, and press the PAUSE button of the adjusting remote commander.
7) Select page: 0, address: 01, and set data: 00.
8) Perform "Modification of D,E,F Page Data".

2. Modification of D, E, F Page Data

If the D, E, F page data has been initialized, change the data of the "Fixed data-2" address shown in the following tables by manual input.

Modifying Method:

1) Before changing the data, select page: 0, address: 01, and set data: 01.
2) New data for changing are not shown in the tables because they are different in destination. When changing the data, copy the data built in the same model.

Note : If copy the data built in the different model, the camcorder may not operate.

3) When changing the data, press the PAUSE button of the adjusting remote commander each time when setting new data to write the data in the non-volatile memory.
4) Check that the data of adjustment addresses is the initial value. If not, change the data to the inital value.
5) After compleating "Modification of D, E, F Paga Data" select page: 0, address: 01, and set data: 00. Also perform all adjustments.

3. D Page Table

Note1 :

Fixed data-1 : Initialized data.
(Refer to “1. Initializing the D,E,F Page Data”.)

Fixed data-2 : Modified data.
(Refer to “2. Modification of D, E, F Page Data”).

Address	Initial Value		Remark
	NTSC	PAL	
00 to 0F			
10	00	00	Fixed data-1 (Initialized data)
11	00	00	
12	00	00	
13			Fixed data-2 (Modified data, copy the data built in the same model.)
14			
15			
16			
17			
18			
19			
1A			
1B			
1C			
1D			
1E			
1F			
20			
21			
22			
23			
24			
25			
26			
27			
28			
29			
2A			Fixed data-1 (Initialized data)
2B			
2C			
2D			
2E			Fixed data-2
2F			
30	88	88	Battery end adj.
31	8D	8D	
32	A8	A8	
33	BD	BD	
34	C8	C8	
35			Fixed data-2 (Modified data, copy the data built in the same model.)
36			
37			
38			
39			
3A			
3B			
3C			
3D			
3E			
3F			
40			
41			
42			
43			
44			
45			
46			
47			
48			
49			
4A			

Address	Initial Value		Remark
	NTSC	PAL	
4B			Fixed data-1 (Initialized data)
4C			
4D			
4E			
4F			
50			Fixed data-2 (Modified data, copy the data built in the same model.)
51			
52			
53			
54			
55			
56			
57			
58			
59			
5A			
5B			
5C			
5D			
5E			
5F			
60			Fixed data-1 (Initialized data)
61			
62			
63			
64			
65			
66			
67			
68			
69			
6A			
6B			
6C			
6D			
6E			
6F			

4. F Page table

Note 1:

Fixed data-1 : Initialized data.
(Refer to "1. Initializing the D,E,F Page Data".)

Fixed data-2 : Modified data.
(Refer to "2. Modification of D, E, F Page Data").

Note 2: There are four models classified by CCD imager types as shown below, and the initial value of adjustment is different according to the model.

NTSC 510H model : CCD-TRV15/TRV15PK

NTSC 760H model : CCD-TRV25/TRV25PK/TRV35/TRV65/TRV65PK/TRV85/TRV93/TRV215/TRV615/TRV815

PAL 510H model : CCD-TRV15E/TRV15EP

PAL 760H model : CCD-TRV35E

Note 3 : There are three models classified by VTR formats as shown below, and the initial value of adjustment is different according to the model.

NTSC HI8 model : CCD-TRV65/TRV65PK/TRV85/TRV93/TRV615/TRV815

NTSC Standard8 model : CCD-TRV15/TRV15PK/TRV25/TRV25PK/TRV35/TRV215

PAL Standard8 model : CCD-TRV15E/TRV15EP/TRV35E

Address	Initial Value		Remark
	NTSC	PAL	
00 to 0F			
10	00	00	Emergency memory address
11	00	00	
12	00	00	
13	00	00	
14	00	00	
15	00	00	
16	00	00	
17	00	00	
18	00	00	
19	00	00	
1A	00	00	
1B	00	00	
1C			Fixed data-2
1D			
1E			
1F			
20			
21	D2	<D2>, [D0]	G-CAM flip adj. < > : CCD-TRV35E [ ] : CCD-TRV15E/TRV15EP
22			Fixed data-2
23			
24			Fixed data-1
25			(Color reproduction adj.)
26			Fixed data-2
27			
28			
29			Fixed data-1
2A			
2B			Fixed data-2
2C	A0	A0	28MHz origin osc. adj.
2D			Fixed data-2
2E			Fixed data-1
2F	80	80	Hall adj.
30	80	80	
31	18/08	18/08	Max gain adj. Note 2 : 510H model/ 760H model
32			Fixed data-1
33			
34	1B	1B	Color reproduction adj.
35			Fixed data-1
36	42	42	Color reproduction adj.
37			Fixed data-1
38			
39			
3A	89	89	Auto white balance adj.
3B	59	59	
3C	38	38	IRIS IN/OUT adj.
3D	41	41	
3E	25	25	Flange back adj.
3F	00	00	
40	19	19	
41	00	00	
42	35	35	
43	52	52	Angular velocity sensor sensitivity adj.
44	52	52	
45	7A	7A	1.5MHz deviation adj.
46	8D	8D	1.7MHz deviation adj.
47	7A	7A	BPF f0 adj.
48			Fixed data-1
49	6B	6B	Y OUT level adj.
4A	40	40	AFC f0 adj.
4B	9A	9A	C OUT level adj.
4C			Fixed data-1
4D	7B	7B	Filter f0 adj.
4E	60	60	RP filter f0 adj.
4F			Fixed data-1
50			
51			
52			
53	40	40	REC Y current adj.
54	40	40	(Addresses 57 to 5A are fixed data addresses.)
56	5F	40	
57	A0/80	80	Note 3 : HI8 model/ Standard8 model
55	5F	40	
58	80	80	
59	90/80	80	
5A	80	80	
5B	50	50	REC L level adj.
5C	50	50	(Addresses 63 to 64 are fixed data addresses.)
5D	43	50	
5E	43	50	
5F	66	66	
60	66	66	
61	67	66	
62	67	66	
63	7C/80	80	Note 3 : HI8 model/ Standard8 model
64	78/80	80	
65	80	80	REC C current adj.
66	41	41	IR video deviation Adj.
67	33	33	IR audio deviation Adj.
68	C7	C7	IR video carrier freq. Adj.
69	3C	3C	CAP FG offset adj.
6A			Fixed data-2
6B			Fixed data-1
6C			
6D			
6E			
6F			
70	3B	3B	AWB standard data input adj.
71	FF	FF	
72	56	56	
73	7D	7D	
74			Fixed data-1
75			
76	1B	1B	Flange back adj.
77	54	54	
78	25	25	
79	80	80	
7A	10	10	
7B	FF	FF	

Address	Initial Value		Remark
	NTSC	PAL	
7C	0A	0A	Switching position adj.
7D	00	00	
7E	0A	0A	
7F	00	00	
80			Fixed data-2
81			
82			Fixed data-1
83			
84			Fixed data-2
85			Fixed data-1
86			Fixed data-2
87			Fixed data-1
88			
89			
8A			
8B			
8C			
8D			
8E			Fixed data-2
8F			Fixed data-1
90			
91			
92			
93			
94			Fixed data-2
95			
96			Fixed data-1
97			
98			Fixed data-2
99			Fixed data-1
9A			Fixed data-2
9B			Fixed data-1
9C			Fixed data-2
9D			Fixed data-1
9E			Fixed data-2
9F			Fixed data-1
A0			Fixed data-2
A1			
A2			
A3			
A4			
A5			Fixed data-1
A6			Fixed data-2
A7			
A8			
A9			
AA			Fixed data-1
AB			
AC			Fixed data-2
AD			Fixed data-1
AE			Fixed data-2
AF			Fixed data-1
B0			
B1			
B2			
B3			
B4			
B5			
B6			
B7			
B8			
B9			
BA			
BB			
BC			
BD			

Address	Initial Value		Remark
	NTSC	PAL	
BE			Fixed data-2
BF			
C0			Fixed data-1
C1			
C2			
C3			
C4			
C5			Fixed data-2
C6			Fixed data-1
C7			
C8			Fixed data-2
C9			
CA			Fixed data-1
CB			
CC			
CD			
CE			
CF			
D0			
D1			
D2			
D3			
D4			
D5			
D6			
D7			
D8			
D9			Fixed data-2
DA			Fixed data-1
DB			
DC			Fixed data-2
DD			Fixed data-1
DE			
DF			
E0			
E1			
E2			
E3			Fixed data-2
E4			
E5			Fixed data-1
E6			Fixed data-2
E7			Fixed data-1
E8			
E9			
EA			
EB			Fixed data-2
EC			
ED			Fixed data-1
EE			
EF			
F0			
F1			
F2			Fixed data-2
F3			Fixed data-1
F4			
F5	FF	FF	Color reproduction adj.
F6	F6	F4	
F7			Fixed data-1
F8			
F9			
FA			
FB			
FC			
FD			
FE			
FF			

5. E Page Table

Note 1:

Fixed data-1 : Initialized data.
(Refer to “1. Initializing the D,E,F Page Data”.)

Fixed data-2 : Modified data.
(Refer to “2. Modification of D, E, F Page Data”).

Note 2: See “1-7. LCD SYSTEM ADJUSTMENT”.

Address	Initial Value		Remark
	NTSC	PAL	
00			Fixed data-1
01			
02			
03			
04			
05			
06			
07			
08			
09			
0A			
0B			
0C			
0D			
0E			
0F			
10			
11			
12			
13			
14			Fixed data-2
15			Fixed data-1
16			
17			
18			
19			
1A			
1B			
1C			
1D			
1E			
1F			
20			
21			
22			
23			
24			
25			
26			
27			
28			
29			
2A			
2B			Fixed data-2
2C			
2D			
2E			
2F			Fixed data-1
30			
31			
32			
33			
34			
35			
36			
37			
38			Fixed data-2
39			
3A			
3B			Fixed data-1
3C			
3D			
3E			
3F			
40			
41			
42			
43			
44			
45			
46			
47			
48			
49			
4A			
4B			
4C			
4D			
4E			
4F			Fixed data-2
50			Fixed data-1
51			Fixed data-2
52			
53			Fixed data-1
54			
55			
56			
57			
58			
59			Fixed data-2
5A			
5B			Fixed data-1
5C			Fixed data-2
5D			Fixed data-1
5E			
5F			
60			Fixed data-2
61			
62			
63			
64			
65			
66			
67			
68			Fixed data-1
69			
6A			
6B			Fixed data-2
6C			
6D			Fixed data-1
6E			Fixed data-2
6F			
70			
71			
72			Fixed data-1
73			Fixed data-2
74			Fixed data-1
75			Fixed data-2
76 to 99			Fixed data-1

Address	Initial Value		Remark
	NTSC	PAL	
9A			Fixed data-2
9B			Fixed data-1
9C			Fixed data-2
9D			Fixed data-1
9E			
9F			
A0			Fixed data-2
A1			
A2			
A3			
A4			Fixed data-1
A5			
A6			
A7			
A8			
A9			
AA			
AB			
AC			
AD			
AE			
AF			
B0			
B1			
B2			
B3			
B4			
B5			
B6			
B7			
B8			
B9			
BA			
BB			
BC			Fixed data-2
BD			
BE			
BF	Note2	Note2	Fixed data (NTSC model) VCO adj. (LCD) (PAL model)
C0			Fixed data-2
C1			
C2	B0	B0	VCO adj. (Color EVF)
C3	80	80	Bright adj. (Color EVF)
C4	77	77	Contrast adj. (Color EVF)
C5	80	80	White balance adj. (Color EVF)
C6	80	80	
C7			Fixed data-2
C8			
C9			
CA			
CB			Fixed data-1
CC	B0	B0	Backlight consumption current adj. (Color EVF)
CD			Fixed data-1
CE			
CF			Fixed data-2
D0	Note 2	Note2	Bright adj. (LCD)
D1	Note 2	Note2	White balance adj. (LCD)
D2	Note 2	Note2	White balance adj. (LCD)
D3	Note 2	Note2	Contrast adj. (LCD)
D4	Note 2	Note2	D range adj. (LCD)
D5	Note 2	Note2	V-COM level adj. (LCD)
D6	Note 2	Note2	VCO adj. (LCD)
D7	Note 2	Note2	V-COM adj. (LCD)
D8			Fixed data-1

Address	Initial Value		Remark
	NTSC	PAL	
D9	Note 2	Note2	Fixed data (NTSC model) Color adj. (LCD) (PAL model)
DA			Fixed data-1
DB			Fixed data-2
DC			Fixed data-1
DD			
DE			
DF			
E0			
E1			
E2			
E3			
E4			
E5			
E6			
E7			
E8			
E9			
EA			Fixed data-2
EB			
EC			Fixed data-1
ED			
EE			
EF			Fixed data-2
F0			Fixed data-1
F1			
F2			
F3			Fixed data-2
F4			Fixed data-1
F5			
F6			
F7			
F8			
F9			
FA			
FB			
FC to FF			

1-3. CAMERA SYSTEM ADJUSTMENTS

Before perform the camera system adjustments, Check that the specified value of "28MHz Origin Oscillation Adjustment", "Y OUT level Adjustment" and "C OUT level Adjustment" of "VIDEO SYSTEM ADJUSTMENT" are satisfied.

1. G-CAM flip Adjustment

Set the color reproduction conditions to optimum.

Subject	Color bar chart standard picture frame
Measurement Point	Display data of page 1 of the adjusting remote commander (Note 1)
Measuring Instrument	
Adjustment Page	F
Adjustment Address	21

Note 1. Displayed data of page 1 of the adjusting remote commander.

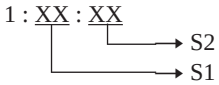

Note 2. [ ] : Except CCD-TRV15E/TRV15EP
< > : CCD-TRV15E/TRV15EP

Adjusting method:

1) Select page: 0, address: 01, and set data: 01.
2) Select page: 0, address: 03, and set data: 16.
3) Select page: F, address: 21, set data: [D2] <D0>, and press the PAUSE button of the adjusting remote commander.
4) Select page 1 of the adjusting remote commander, and compare the higher 2 digits (S1) and lower 2 digits (S2) of the 4-degits display data.
   When S1<S2
   Perform steps 5) onwards.
   When S1≧S2
   Perform steps "Processing after Completing Adjustments".
5) Select page: F, address: 21, set data: [52] <50>, and press the PAUSE button of the adjusting remote commander.

Processing after Completing Adjustments

1) Select page: 0, address: 03, and set data: 00.
2) Select page: 0, address: 01, and set data: 00.

2. HALL Adjustment

For detecting the position of the lens iris, adjust the hall AMP gain and offset.

Subject	Not required
Measurement Point	DDS display data of LCD or TV monitor (Note 3)
Measuring Instrument	
Adjustment Page	F
Adjustment Address	2F, 30
Specified Value	90 to 94 during IRIS OPEN (Note 1) 19 to 1D during IRIS CLOSE (Note 2)

Note 1: Select page: 2, address: 01, set data: 01, and press the PAUSE button of the adjusting remote commander.

Note 2: Select page: 2, address: 01, set data: 03, and press the PAUSE button of the adjusting remote commander.

Note 3: DDS display data of LCD or TV monitor.

00 00XX → Object data

Adjusting method:

1) Select page: 0, address: 01, and set data: 01.
2) Select page: 0, address: 03, and set data: 03.
3) Select page: D, address: 11, set data: 02, and press the PAUSE button of the adjusting remote commander.
4) Select page: 2, address: 01, set data: 03, and press the PAUSE button.
5) Select page: F, address: 30, set data: 80, and press the PAUSE button.
6) Select page: F, address: 2F, set data: 40, and press the PAUSE button.
7) Read the DDS display data (the bottom two digits of the display data at the bottom right of the LCD display or the TV monitor), and this data is named K_2.
8) Select page: F, address: 2F, set data: 30, and press the PAUSE button.
9) Read the DDS display data, and this data is named K_1.
10) Select page: 2, address: 01, set data: 01, and press the PAUSE button.
11) Read the DDS display data, and this data is named W_1.
12) Select page: F, address: 2F, set data: 40, and press the PAUSE button.
13) Read the DDS display data, and this data is named W_2.
14) Convert W_1, W_2, K_1, K_2, to decimal notation, and obtain W_1' , W_2' , K_1' , K_2'. (Refer to Table 5-1-2. “Hexadecimal notation - decimal notation conversion table” of “Service mode”.)
15) Calculate X_1' using the following equations (decimal notation calculation).

$A' = W_2' + K_1' - W_1' - K_2'$ Equation 1

$B' = W_1' - K_1'$ Equation 2

$X_1' = [1904 + (48 \times A') - (16 \times B')] / A'$ Equation 3

16) Convert X_1' to hexadecimal notation, and obtain X_1. (Round off to one decimal place)
17) Select page: F, address: 2F, set data: X_1, and press the PAUSE button.
18) Select page: 2, address: 01, and set data: 01, and press the PAUSE button.
19) Select page: F, address: 30, change the data and adjust the DDS display data to “92”.
20) Press the PAUSE button of the adjusting remote commander.
21) Select page: 2, address: 01, and set data: 03, and press the PAUSE button.
22) Read the DDS display data, and this data is named K_0. If K_0 lies within the “19” to “1D” range, perform “Processing after completing adjustments”. If it is lies outside the range, perform the following adjustments.
23) Convert K_0 to decimal notation, and obtain K_0'.
24) Calculate X_2' using the following equations (decimal notation calculation).

$C' = 146 - B' - K_0'$ Equation 4

$X_2' = [(119 - B') \times (X_1' - 48) + (48 \times C')] / C'$ Equation 5

(X_1' and B' are values obtained from equations 2) and 3))

25) Convert X_2' to hexadecimal notation, and obtain X_2. (Round off to one decimal place)
26) Select page: F, address: 2F, set data: X_2, and press the PAUSE button.
27) Select page: 2, address: 01, set data: 03, and press the PAUSE button.
28) Select page: F, address: 30, change the data and adjust the DDS display data to “1B”.
29) Press the PAUSE button of the adjusting remote commander.
30) Select page: 2, address: 01, set data: 01, and press the PAUSE button.
31) Check the DDS display data lies within the “90” to “94” range.

Processing after Completing Adjustments

1) Select page: D, address: 11, and set data: 00, and press the PAUSE button.
2) Select page: 0, address: 01, and set data: 00.
3) Select page: 2, address: 01, and set data: 00, and press the PAUSE button.
4) Select page: 0, address: 03, and set data: 00.

3. Flange Back Adjustment

The inner focus lens flange back adjustment is carried out automatically. In whichever case, the focus will be deviated during auto focusing/manual focusing.

3-1. Flange Back Adjustment(1)

Subject	Flange back adjustment chart (2.0 m from the front of the lens) (Luminance: 200 ± 50 lux)
Measurement Point	Check operation on TV monitor
Measuring Instrument	
Adjustment Page	F
Adjustment Address	3E to 42, 76 to 7B

Switch setting:

1) NIGHT SHOT switch ..... OFF

Adjusting method:

1) Check that at both the zoom lens TELE end and WIDE end, the center of the chart for the flange back adjustment and center of the exposure screen coincide.
2) Select page: 0, address: 01, and set data: 01.
3) Check that the data of page: F, address: 3E to 42, 76 to 7B is the initial value (See table below).

Address	Data	Address	Data
3E	25	77	54
3F	00	78	25
40	19	79	80
41	00	7A	10
42	35	7B	FF
76	1B		

4) Select page: 2, address: 02, and check that the data is “00 “.
5) Select page: 2, address: 01, set data: 13, and press the PAUSE button of the adjusting remote commander.
6) Select page: 2, address: 01, set data: 15, and press the PAUSE button of the adjusting remote commander.
   (The adjustment data will be automatically input to page: F, addresses: 3E to 42, 76 to 7B.)
7) Select page: 2, address: 02, and check that the data is „01“.

Processing after Completing Adjustments

1) Turn OFF the main power supply (8.4V).
2) Perform “Flange Adjustment (2)”.

3-2. Flange Back Adjustment (2)

Perform this adjustment after performing “Flange Back Adjustment (1)”.

Subject	Subject more than 500m away (Subjects with clear contrast such as buildings, etc.)
Measurement Point	Check operation on TV monitor
Measuring Instrument	
Adjustment Page	F
Adjustment Address	3E to 42, 76 to 7B

Switch setting:

1) NIGHT SHOT switch ..... OFF

Adjusting method:

1) Set the zoom lens to the TELE end and expose a subject that is more than 500 m away (subject with clear contrast such as building, etc.). (Nearby subjects less than 500 m away should not be in the screen.)
2) Select page: 0, address: 01, and set data: 01.
3) Select page: 2, address: 02, and check that the data is “00”.
4) Select page: 2, address: 01, set data: 13, and press the PAUSE button of the adjusting remote commander.
5) Place a ND filter on the lens so that the optimum image is obtain.
6) Select page: 2, address: 01, set data: 29, and press the PAUSE button of the adjusting remote commander.
   (The adjustment data will be automatically input to page: F, addresses: 3E to 42, 76 to 7B.)
8) Select page: 2, address: 02, and check that the data is “01”.

Processing after Completing Adjustments

1) Select page: 0, address: 01, and set data: 00.
2) Turn OFF the main power supply (8.4V).
3) Perform “Flange Back Check”.

4. Flange Back Check

Subject	Siemens star (2.0 m from the front of the lens) (Luminance: approx. 200 lux)
Measurement Point	Check operation on TV monitor
Measuring Instrument	
Adjustment Page	F
Adjustment Address	3E to 42, 76 to 7B

Switch setting:

1) NIGHT SHOT switch ..... OFF

Checking method:

1) Place the Siemens star 2.0m from the front of the lens.
2) To open the IRIS, decrease the luminous intensity to the Siemens star up to a point before noise appear on the image.
3) Select page: 2, address: 40, and set data: 02.
4) Select page: 2, address: 41, and set data: 01.
5) Shoot the Siemens star with the zoom TELE end.
6) Turn on the auto focus.
7) Check that the lens is focused (Note1).
8) Select page: 2, address: 21, and set data: 10.
9) Shoot the Siemens star with the zoom WIDE end.
10) Observe the TV monitor and check that the lens is focused.

Note 1: When the auto focus is ON, the lens can be checked if it is focused or not by observing the data on the page 1 of the adjusting remote commander.

1) Select page: 0, address: 03, and set data: 0F.
2) Page 1 shows the state of the focus.

1 : 00 : XX → Odd: Focused
Even: Unfocused

Processing after Completing Adjustments

1) Select page: 2, address: 21, and set data: 00.
2) Select page: 0, address: 03, and set data: 00.
3) Select page: 2, address: 40, and set data: 00.
4) Select page: 2, address: 41, and set data: 00.

5. Picture Frame Setting

Subject	Color bar chart standard picture frame (1.5m from the front of the lens)
Measurement Point	Video output terminal
Measuring Instrument	Oscilloscope and TV monitor
Specified Value	A=B, C=D, t=0 ± 0.1msec

Setting method:

1) Adjust the zoom and the camera direction, and set to the specified position.
2) Mark the position of the picture frame on the monitor display, and adjust the picture frame to this position in following adjustments using “Color bar chart standard picture frame”.

1. Horizontal period

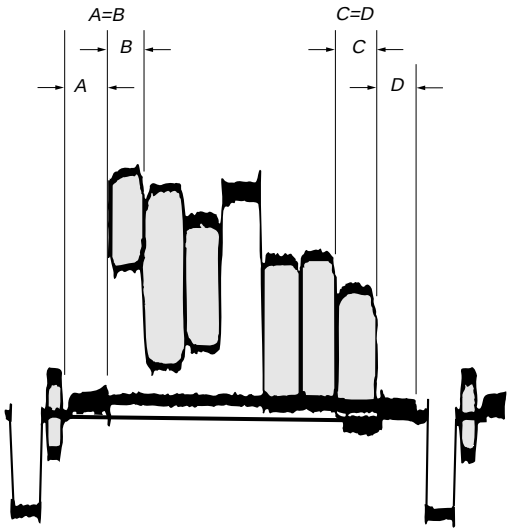

2. Vertical period

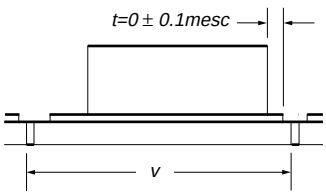

Fig. 5-1-8.

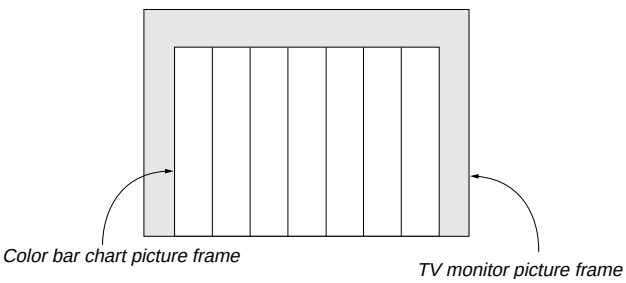

Fig. 5-1-9.

6. Color Reproduction Adjustment

Adjust the color Separation matrix coefficient so that proper color reproduction is produced.

Subject	Color bar chart standard picture frame
Measurement Point	Video output terminal
Measuring Instrument	Vectorscope
Adjustment Page	F
Adjustment Address	34, 36, F5, F6

Specified Value

All color luminance points should settle within each color reproduction frame.

Note1: NTSC 510H model (CCD-TRV15/ TRV15PK)
NTSC 760H model (CCD-TRV25/ TRV25PK/ TRV35/ TRV65/ TRV65PK/ TRV85/ TRV93/ TRV215/ TRV615/ TRV815)
PAL 510H model (CCD-TRV15E/ TRV15EP)
PAL 760H model (CCD-TRV35E)

Switch setting:

1) NIGHT SHOT switch ..... OFF

Adjusting method:

1) Select page: 0, address: 01, and set data: 01.
2) Select page: 2, address: 01, set data: 3D, and press the PAUSE button of the adjusting remote commander.
3) Select page: F, address: 25, set data: 3F, and press the PAUSE button of the adjusting remote commander.
4) Adjust the GAIN and PHASE of the vectorscope, and adjust the burst luminance point to the burst position of the color reproduction frame.
5) Change the data of page: F, address: 34, 36, F5 and F6, and settle each color luminance point in each color reproduction frame.

Note 2: Be sure to press the PAUSE button of the adjusting remote commander before changing the of addresses. If not, the new data will not be written to the memory.

6) Press the PAUSE button of the adjusting remote commander.

Processing after Completing Adjustments

1) Select page: 2, address: 01, and set data: 00, and press the PAUSE button of the adjusting remote commander.
2) Select page: 0, address: 01, and set data: 00.

For NTSC 510H model

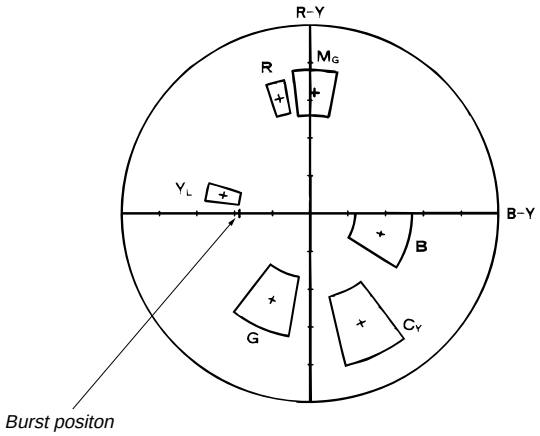

For NTSC 760H model

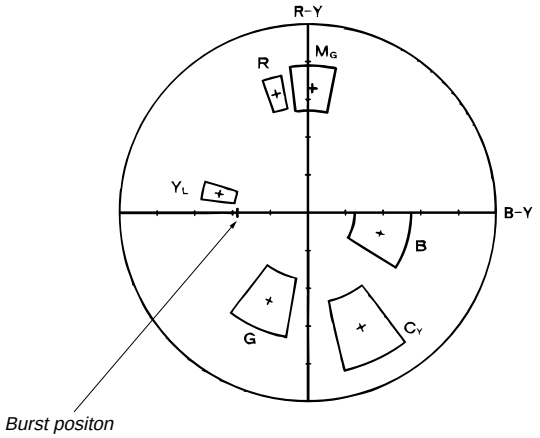

For PAL 510H/PAL 760H model

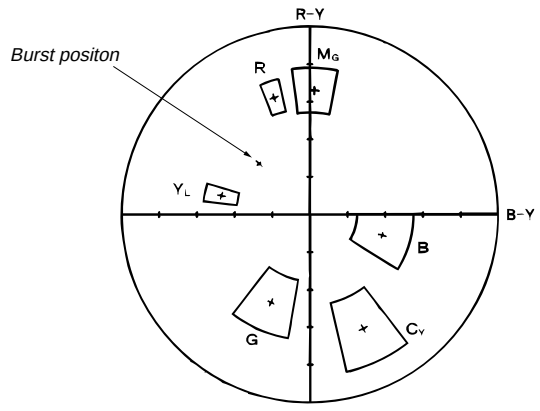

Fig. 5-1-10.

7. IRIS IN/OUT Adjustment

For the unit to judge if the white balance is indoors or outdoors in auto white balance operations, measure the light level and write it in the EEPROM.
If the level is not correct, the white balance will not be accurate.

Subject	Clear chart (Color bar standard picture frame)
Measurement Point	DDS display of LCD or TV monitor (Note 1)
Measuring Instrument	
Adjustment Page	F
Adjustment Address	3C, 3D

Note 1: The right four digits of the display data at the right bottom side of the LCD and TV monitor is the LIGHT LEVEL data.

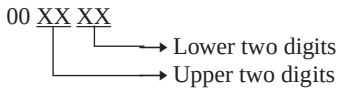

Switch setting:
1) STEADY SHOT (Menu display) ..... OFF
2) NIGHT SHOT switch ..... OFF

Adjusting method:
1) Select page: 0, address: 01, and set data: 01.
2) Select page: 0, address: 03, and set data: 06.
3) Select page: D, address: 11, and set data: 02, and press the PAUSE button of the adjusting remote commander.
4) Select page: 2, address: 40, and set data: 02.
5) Select page: 2, address: 01, set data: 0B, and press the PAUSE button of the adjusting remote commander.
6) Read the DDS display data (Note 1), and take the upper two digits as D_1 and the lower two as D_2.
7) Convert D_1 to decimal notation, and obtain D_1'. (Refer to Table 5-1-2. “Hexadecimal notation - decimal notation conversion table” of “Service mode”.)
8) Calculate D_3' using the following equations. (Equations 1 and 2 are for decimal notation calculation).
   When $D_2 \geqq D0$
   $D_3' = D_1' - 21$ ..... Equation 1
   When $D_2 < D0$
   $D_3' = D_1' - 22$ ..... Equation 2
9) Convert D_3' to hexadecimal notation, and obtain D_3.
10) Select page: F, address: 3C, set data: D_3, and press the PAUSE button of the adjusting remote commander.
11) Select page: 2, address: 01, set data: 09, and press the PAUSE button of the adjusting remote commander.
12) Read the DDS display data (Note 1), and take the upper two digits as D_4 and the lower two as D_5.
13) Convert D_4 to decimal notation, and obtain D_4'. (Refer to Table 5-1-2. “Hexadecimal notation - decimal notation conversion table” of “Service mode”.)
14) Calculate D_6' using the following equations. (Equations 3 and 4 are for decimal notation calculation).
   When $D_5 \geqq F0$
   $D_6' = D_4' - 13$ ..... Equation 3
   When $D_5 < F0$
   $D_6' = D_4' - 14$ ..... Equation 4
15) Convert D_6' to hexadecimal notation, and obtain D_6.
16) Select page: F, address: 3D, set data: D_6, and press the PAUSE button of the adjusting remote commander.

Processing after Completing Adjustments
1) Select page: D, address: 11, and set data: 00, and press the PAUSE button of the adjusting remote commander.
2) Select page: 0, address: 01, and set data: 00.
3) Select page: 2, address: 01, and set data: 00, and press the PAUSE button of the adjusting remote commander.
4) Select page: 2, address: 40, and set data: 00.
5) Select page: 0, address: 03, and set data: 00.

8. MAX GAIN Adjustment

Setting the minimum illumination.
If it is not consistent, the image level required for taking subjects in low illuminance will not be produced (dark).

Subject	Clear chart (Color bar standard picture frame)
Measurement Point	DDS display of LCD or TV monitor (Note 1)
Measuring Instrument	
Adjustment Page	F
Adjustment Address	31
Specified Value	C0 to FF

Note 1: The right two digits of the display data at the right bottom side of the LCD and TV monitor is the object data.

Note 2: NTSC 510H model (CCD-TRV15/TRV15PK)
NTSC760H model (CCD-TRV25/TRV25PK/TRV35/TRV65/TRV65PK/TRV85/TRV93/TRV215/TRV615/TRV815)
PAL 510H model (CCD-TRV15E/15EP)
PAL 760H model (CCD-TRV35E)

Switch setting:
1) STEADY SHOT (Menu display) ..... OFF
2) NIGHT SHOT switch ..... OFF

Adjusting method:
1) Select page: 0, address: 01, and set data: 01.
2) Select page: D, address: 11, and set data: 02, and press the PAUSE button of the adjusting remote commander.
3) Select of page: 0, address: 03, and set data: 01.
4) Select page: 2, address: 40, and set data: 02.
5) Select page: 2, address: 56, and set data: 40.
6) Select page: 2, address: 01, set data: 19, and press the PAUSE button of the adjusting remote commander.
7) Select page: F, address: 31, set data: [18] <08>, and press the PAUSE button of the adjusting remote commander.
   Note : [ ] : 510H model
   < > : 760H model
8) Check that the DDS display data (Note 1) lies within the specified value.

Processing after Completing Adjustments
1) Select page: D, address: 11, and set data: 00, and press the PAUSE button of the adjusting remote commander.
2) Select page: 0, address: 01, and set data: 00.
3) Select page: 2, address: 01, and set data: 00, and press the PAUSE button of the adjusting remote commander.
4) Select page: 2, address: 40, and set data: 00.
5) Select page: 2, address: 56, and set data: 00.
6) Select page: 0, address: 03, and set data: 00.

9. Auto White Balance Standard Data Input

Subject	Clear chart (Color bar standard picture frame)
Adjustment Page	F
Adjustment Address	70 to 73

Note 1: Perform "Color Reproduction Adjustment" before this adjustment.

Note 2: Check that the data of page: 2, address: 02 is 00. If not, turn the power of the unit OFF/ON.

Switch setting:

1) NIGHT SHOT switch ..... OFF

Adjusting method:

1) Select page: 0, address: 01, and set data: 01.
2) Wait for 2 seconds.
3) Select page: 2, address: 01, and set data: 11, and press the PAUSE button of the adjusting remote commander.
4) Select page: 2, address: 01, and set data: 0D, and press the PAUSE button of the adjusting remote commander.
   (When the standard data is take in, the data will be automatically input to page: F, address: 70 to 73.)
5) Select page: 2, address: 02, and check that the data is "01".
6) Perform "Auto White Balance Adjustment".

Processing after Completing Adjustments

1) Select page: 2, address: 01, and set data: 00, and press the PAUSE button of the adjusting remote commander.
2) Select page: 0, address: 01, and set data: 00.

10. White Balance Adjustment

Adjust to the proper auto white balance output data.
If it is not correct, auto white balance and color reproducibility will be poor.

Subject	Clear chart (Color bar standard picture frame)
Filter	Filter C14 for color temperature correction
Measurement Point	DDS display of LCD or TV monitor (Note 1)
Measuring Instrument	
Adjustment Page	F
Adjustment Address	3A, 3B
Specified Value	R ratio: 2B40 to 2BC0 B ratio: 5E40 to 5EC0

Note 1: Perform "Auto White Balance Standard Data Input" before this adjustment.

Note 2: The right four digits of the display data at the right bottom side of the LCD and TV monitor is the object data.

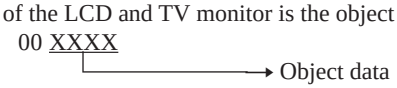

Switch setting:

1) NIGHT SHOT switch ..... OFF

Adjusting method:

1) Place the C14 filter for color temperature correction on the lens.
2) Select page: 0, address: 01, and set data: 01.
3) Select page: D, address: 11, and set data: 02, and press the PAUSE button of the adjusting remote commander.
4) Select page: 2, address: 01, and set data: 3F, and press the PAUSE button of the adjusting remote commander.
5) Select page: 0, address: 03, and set data: 04.
6) Select page: F, address: 3A, and change the data, and adjust the average value of the DDS display data(Note 2) to the R ratio specified value.
7) Press the PAUSE button of the adjusting remote commander.
8) Select page: 0, address: 03, and set data: 05.
9) Select page: F, address: 3B, and change the data, and adjust the average value of the DDS display data(Note 2) to the B ratio specified value.
10) Press the PAUSE button of the adjusting remote commander.

Processing after Completing Adjustments

1) Select page: D, address: 11, and set data: 00, and press the PAUSE button of the adjusting remote commander.
2) Select page: 0, address: 01, and set data: 00.
3) Select page: 2, address: 01, and set data: 00, and press the PAUSE button of the adjusting remote commander.
4) Select page: 0, address: 03, and set data: 00.

11. White Balance Check

Subject	Clear chart (Color bar standard picture frame)
Filter	Filter C14 for color temperature correction ND filter 1.0 and 0.3
Measurement Point	video output terminal
Measuring Instrument	Vectorscope
Specified Value	Fig. 5-1-11. A to C

Switch setting:

1) NIGHT SHOT switch ..... OFF

Checking method:

1) Check that the lens is not covered with either filter.
2) Select page: 2, address: 01, set data: 0F, and press the PAUSE button of the adjusting remote commander.
3) Check that the center of the white luminance point is within the circle shown Fig. 5-1-11.A.
4) Select page: 2, address: 01, set data: 00, and press the PAUSE button of the adjusting remote commander.
5) Select page: 2, address: 01, set data: 23, and press the PAUSE button of the adjusting remote commander.
6) Place the C14 filter on the lens.
7) Check that the center of the white luminance point settles in the circle shown Fig. 5-1-11.B.
8) Remove the C14 filter, and place the ND filter 1.3 (1.0 +0.3) on the lens.
9) Check that the white luminance point stopped moving, and then remove the ND filter 1.3.
10) Check that the center of the white luminance point settles within the circle shown Fig. 5-1-11.C.

Processing after Completing Adjustments

1) Select page: 2, address: 01, and set data: 00, and press the PAUSE button of the adjusting remote commander.

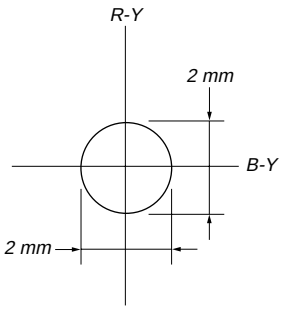

Fig.5-1-11. A

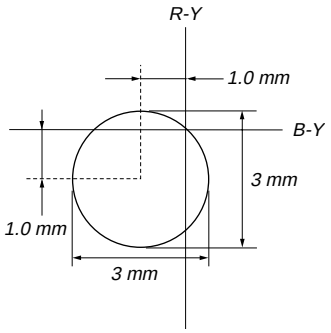

Fig.5-1-11. B

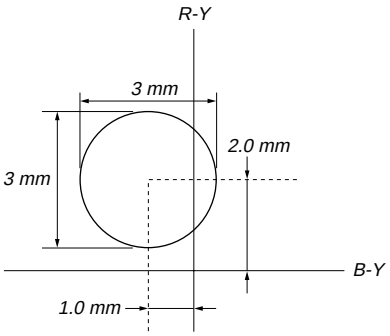

Fig.5-1-11. C

12. Angular Velocity Sensor Sensitivity Adjustment

- This adjustment is performed only when replacing the angular velocity sensor.
  Although this adjustment need not be performed when the circuit is damaged, etc., check the operations.
- Note down the sensitivity displayed on the angular velocity sensor of the repair parts. At this time, note down also to which board it was attached to.
  Be sure to check because if attached incorrectly, the screen will vibrate up and down or left and right during hand-shake correction operations.

Precautions on the Parts Replacement
There are two types of repair parts.
Type A : ENC03EA or ENC 03JA
Type B : ENC03EB or ENC 03JB
Replace the broken sensor with a same type sensor. If replace with other parts, the image will vibrate up and down or left and right during hand-shake correction operations. After replacing, re-adjust according to the adjusting method after replacement.

Precautions on Angular Velocity Sensor
The sensor incorporates a precision oscillator. Handle it with care as if it dropped, the balance of the oscillator will be disrupted and operations will not be performed properly.

Adjustment page	F
Adjustment Address	43, 44

Note: The sensor sensitivity of SE451 and SE452 of the SE-66/67 board is written only on the repair parts.

Adjusting method:
1) Select page: 0, address: 01, and set data: 01.
2) Read the sensor sensitivity written on SE451 of the SE-66/67 board, and take this as S_{451}.
3) Read the sensor sensitivity written on SE452 of the SE-66/67 board, and take this as S_{452}.
4) Calculate D_{43}' and D_{44}' using the following equation (decimal calculation).
   NTSC model(CCD-TRV15/ TRV15PK/ TRV25/ TRV25PK/ TRV215/TRV35/ TRV65/ TRV65PK/ TRV85/ TRV93/ TRV615/ TRV815)
   $D_{43}' = 85 / S_{451}$
   $D_{44}' = 90 / S_{452}$
   PAL model (CCD-TRV15E/ TRV15EP/TRV35E)
   $D_{43}' = 118 / S_{451}$
   $D_{44}' = 106 / S_{452}$
5) Convert D_{43}' and D_{44}' into hexadecimal digits, to obtain D_{43} and D_{44}. (Round off decimal points)
6) Select page: F, address: 43, set data: D_{43}, and press the PAUSE button of the adjusting remote commander.
7) Select page: F, address: 44, set data: D_{44}, and press the PAUSE button of the adjusting remote commander.

Processing after Completing Adjustments
1) Select page: 0, address: 01, and set data: 00.
2) Check that the steady shot operations have been performed normally.

1-4. COLOR ELECTRONIC VIEWFINDER SYSTEM ADJUSTMENT

(CCD-TRV93)

Note 1: The back light (fluorescent tube) is driven by a high voltage AC power supply. Therefore, do not touch the back light holder to avoid electrical shock.

Note 2: When replacing the LCD unit, be careful to prevent damages caused by static electricity.

[Adjusting connector]

Most of the measuring points for adjusting the viewfinder system are concentrated in CN910 of the VC-195 board.

Connect the measuring instruments via the CPC-7 jig (J-6082-382-A).

The following table shows the Pin No. and signal name of CN910.

Pin No.	Signal Name	Pin No.	Signal Name
1	LANC SIG	9	RF AGC OUT
2	XCPC IN	10	REC RF
3	IR VIDEO	11	RF SWP
4	AFC F0	12	CAP FG
5	BPF MONI	13	EVF BL
6	PB RF	14	EVF BL 4.75V
7	RF AGC IN	15	VCO
8	REG GND	16	EVF VG

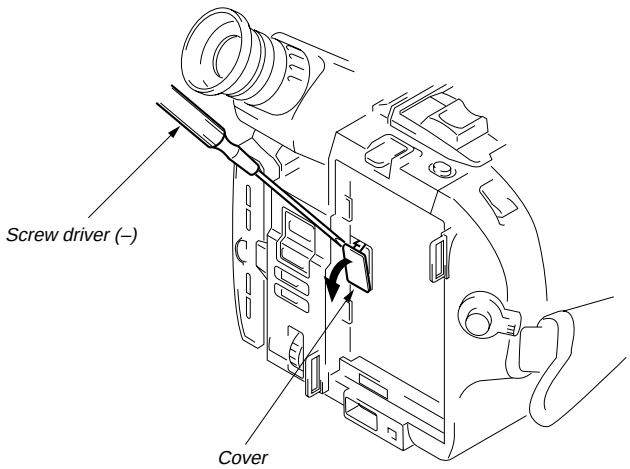

Fig.5-1-12.

1. EVF Initial Data Input

Mode	VTR stop
Signal	No signal
Adjustment Page	E
Adjusting Address	C2 to CD

Adjusting method:

1) Select page: 0, address: 01, and set data: 01.

2) Select page: E, and input the data in the following table.

Note: To write in the non-volatile memory (EEPROM), press the PAUSE button of the adjusting remote commander each time to set the data.

3) Select page: 0, address: 01, and set data: 00.

Address	Data	Remark
C2	B0	VCO adjustment
C3	80	Bright adjustment
C4	77	Contrast adjustment
C5	80	White balance adjustment
C6	80	White balance adjustment
C7	68	Fixed value
C8	50	Fixed value
C9	F8	Fixed value
CA	A8	Fixed value
CB	3C	Fixed value
CC	B0	Backlight Consumption Current Adjustment
CD	70	Fixed value

2. VCO Adjustment (VF-119 board)

Set the VCO free-run frequency. If deviated, the EVF screen will be blurred.

Mode	VTR stop
Signal	No signal
Measurement point	Pin ⑮ of CN910 (VCO) on VC-195 board
Measuring instrument	Oscilloscope (DC range)
Adjustment page	E
Adjustment address	C2
Specified value	A = 1.8 ± 0.1Vdc

Adjusting method:

1) Select page: 0, address: 01, and set data: 01.
2) Select page: 3, address: 01, set data: 55, and press the PAUSE button of the adjusting remote commander.
3) Check the GND level of the oscilloscope.
5) Select page: E, address: C2, change the data and set the VCO output voltage (A) to the specified value.
4) Press the PAUSE button of the adjusting remote commander.
5) Select page: 3, address: 01, set data: 00, and press the PAUSE button of the adjusting remote commander.
6) Select page: 0, address: 01, and set data: 00.

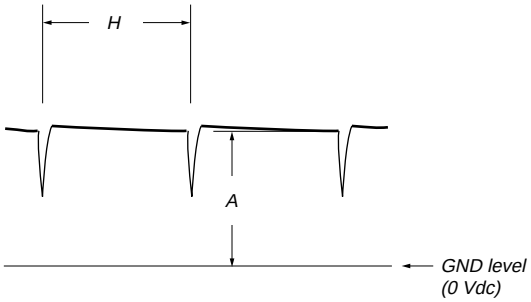

Fig. 5-1-13.

3. Bright Adjustment (VF-119 board)

Set the level of the VIDEO signal for driving the LCD to the specified value. If deviated, the screen image will be blackish or saturated (whitish).

Mode	VTR stop
Signal	No signal
Measurement point	Pin ⑯ of CN910 (EVF VG) on VC-195 board
Measuring instrument	Oscilloscope
Adjustment page	E
Adjustment address	C3
Specified value	A = 7.2 ± 0.1 V

Adjusting method:

1) Select page: 0, address: 01, and set data: 01.
2) Select page: 3, address: 01, set data: 55, and press the PAUSE button of the adjusting remote commander.
3) Select page: E, address: C3, change the data and set the voltage (A) between the reversed waveform pedestal and non-reversed waveform pedestal to the specified value.
4) Press the PAUSE button of the adjusting remote commander.
5) Select page: 3, address: 01, set data: 00, and press the PAUSE button of the adjusting remote commander.
6) Select page: 0, address: 01, and set data: 00.

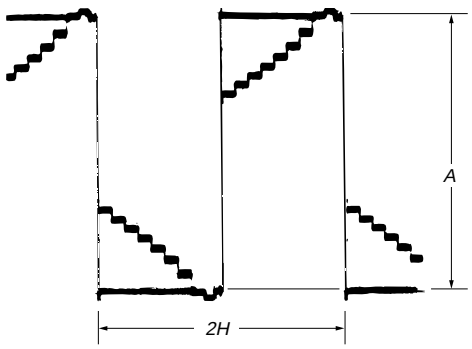

Fig. 5-1-14.

4. Contrast Adjustment (VF-119 board)

Set the level of the VIDEO signal for driving the LCD to the specified value. If deviated, the screen image will be blackish or saturated (whitish).

Mode	VTR stop
Signal	No signal
Measurement Point	Pin ⑯ of CN910 (EVF VG) on VC-195 board
Measuring Instrument	Oscilloscope
Adjustment Page	E
Adjustment Address	C4
Specified Value	A = 2.1 ± 0.1V (NTSC) A = 2.0 ± 0.1V (PAL)

Adjusting method:

1) Select page: 0, address: 01, and set data: 01.
2) Select page: 3, address: 01, set data: 55, and press the PAUSE button of the adjusting remote commander.
3) Select page: E, address: C4, change the data and set the voltage (A) between the 7 step peak and the pedestal to the specified value.
4) Press the PAUSE button of the adjusting remote commander.
5) Select page: 3, address: 01, set data: 00, and press the PAUSE button of the adjusting remote commander.
6) Select page: 0, address: 01, and set data: 00.

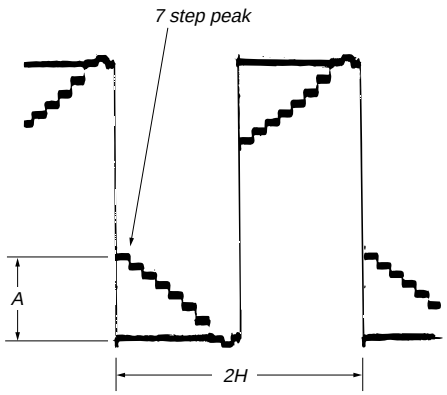

Fig. 5-1-15.

5. Backlight Consumption Current Adjustment (VF-120 board)

Set the backlight luminance and color temperature.
If deviated, the image may become dark or bright.

Mode	VTR stop
Signal	No signal
Measurement Point	+ Probe: Pin ⑭ of CN910 (EVF BL 4.75V) on VC-195 board – Probe: Pin ⑬ of CN910 (EVF BL) on VC-195 board
Measuring Instrument	Digital voltmeter
Adjustment Page	E
Adjustment Address	CC
Specified Value	A = 21.0 ± 1.0 mVdc

Note: Adjust 30 seconds after running on the power supply.

Adjusting method:

1) Select page: 0, address: 01, and set data: 01.
2) Select page: 3, address: 01, set data: 55, and press the PAUSE button of the adjusting remote commander.
3) Select page: E, address: CC, change the data and set the voltage difference (A) between Pin ⑭ of CN910 (EVF BL 4.75V) and Pin ⑬ of CN910 (EVF BL) to the specified value.
4) Press the PAUSE button of the adjusting remote commander.
5) Select page: 3, address: 01, set data: 00, and press the PAUSE button of the adjusting remote commander.
6) Select page: 0, address: 01, and set data: 00.

6. White Balance Adjustment (VF-119 board)

Correct the white balance.
If deviated, the reproduction of the EVF screen may degenerate.

Mode	VTR stop
Signal	No signal
Measurement Point	Check on EVF screen
Measuring Instrument	
Adjustment Page	E
Adjustment Address	C5, C6
Specified Value	The EVF screen should not be colored.

Adjusting method:

1) Select page: 0, address: 01, and set data: 01.
2) Select page: 3, address: 01, set data: 51, and press the PAUSE button of the adjusting remote commander.
2) Select page: 2, address: 7D, and set data: 03.
3) Select page: E, address: C5 and C6, set the data to the initial value.

Note: To write in the non-volatile memory (EEPROM), press the PAUSE button of the adjusting remote commander each time to set the data.

Address	C5	C6
Data	80	80

4) Check that the LCD screen is not colored. If colored, change the data of page: E, address: C5 and C6 so that the EVF screen is not colored.

Note: To write in the non-volatile memory (EEPROM), press the PAUSE button of the adjusting remote commander each time to set the data.

5) Select page: 2, address: 7D, and set data: 00.
6) Select page: 3, address: 01, set data: 00, and press the PAUSE button of the adjusting remote commander.
7) Select page: 0, address: 01, and set data: 00.

1-5. MONOCHROME ELECTRONIC VIEWFINDER SYSTEM ADJUSTMENTS

(CCD-TRV15/ TRV15PK/ TRV15E/ TRV15EP/ TRV25/ TRV25PK/ TRV35/ TRV35E/ TRV65/ TRV65PK/ TRV85/ TRV215/ TRV615/ TRV815)

Note: NTSC model: CCD-TRV15/ TRV15PK/ TRV25/ TRV25PK/ TRV35/ TRV65/ TRV65PK/ TRV85/ TRV93/ TRV215/ TRV615/ TRV815
PAL model : CCD-TRV15E/ TRV15EP/ TRV35E

1-5-1. Horizontal Slant Check

Mode	Playback
Signal	Alighment tape : For checking operations (WR5-5NSP (NTSC)) (WR5-5CSP (PAL)) Monoscope section
Specified Value	± 1.5 °

Adjusting method:
1) Adjust RV904 (BRIGHT) (VF-99 board) so that the CRT can be seen easily and clearly.
2) Check that the difference between the horizontal line and the tilt of the black mask satisfies the specified value.

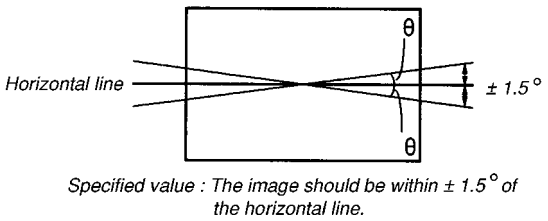

Fig. 5-1-16.

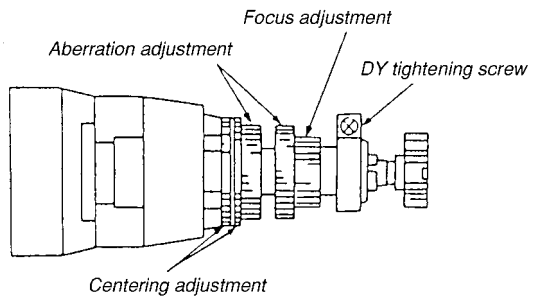

Fig. 5-1-17.

1-5-2. Centering Adjustment

Mode	Playback
Signal	Alighment tape : For checking operations (WR5-5NSP (NTSC)) (WR5-5CSP (PAL)) Monoscope section
Specified Value	± 4%

Adjusting method:
1) Use the centering adjustment ring and adjust so that the left, right, top, and bottom sides of the display are uniform. (Refer to Fig. 5-1-17.)

Note : As the centering position changes due to earth magnetism, rotate it 360˚ in the horizontal direction, and adjust with the center section of the modifying position.

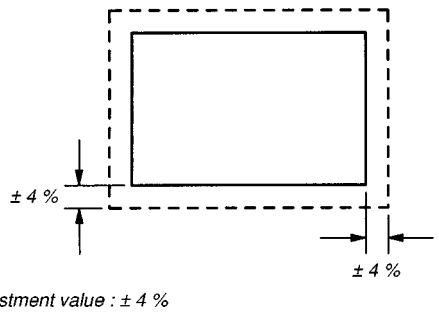

Fig. 5-1-18.

1-5-3. Focus Adjustment

Mode	Playback
Signal	Alighment tape : For checking operations (WR5-5NSP (NTSC)) (WR5-5CSP (PAL)) Monoscope section

Adjusting method:
1) Adjust the focus ring to obtain the optimum focus. (Refer to Fig. 5-1-17.)

VF-99 BOARD (SIDE A)

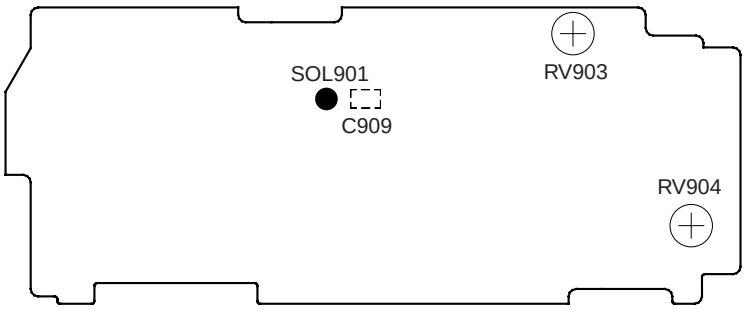

1-5-4. Aberration Adjustment

Mode	VTR stop
Signal	Dot pattern
Specified Value	b1≦2 • a1 b2≦0.8 • a2

Adjusting method:

1) Adjust the aberration adjustment ring so that the tracing of the dot satisfies the specified value.
2) If the centering becomes displaced here, perform the centering adjustment from the beginning again.

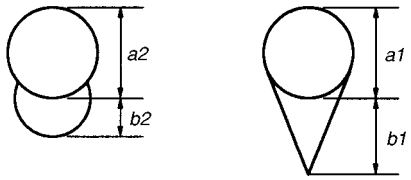

Fig. 5-1-19.

1-5-5. Horizontal Amplitude Adjustment (VF-99 board)

Mode	Playback
Signal	Alighment tape : For checking operations (WR5-5NSP (NTSC)) (WR5-5CSP (PAL)) Monoscope section
Adjusting Element	C909 (SOL901)
Specified Value	± 1.5 °

Adjusting method:

1) Rotate RV903, and adjust the top and bottom sides of the monoscope image to the top and bottom edges of the display.
2) Rotate RV904 so that the brightness is the normal level.
3) Solder or unsolder SOL901 pattern of the H size adjustment capacitor (C909) to “short” or “open”, so that the horizontal direction over scan becomes 14 ± 6% (Left and right totals).

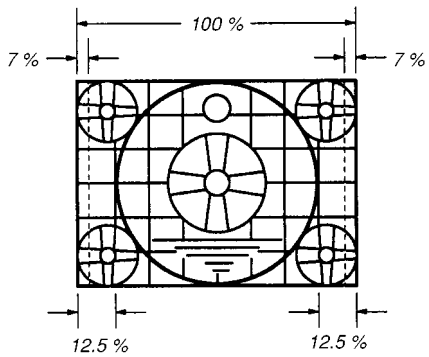

SOL901	Size H
Open	Small
Short	Big

VF-99 BOARD (SIDE A)

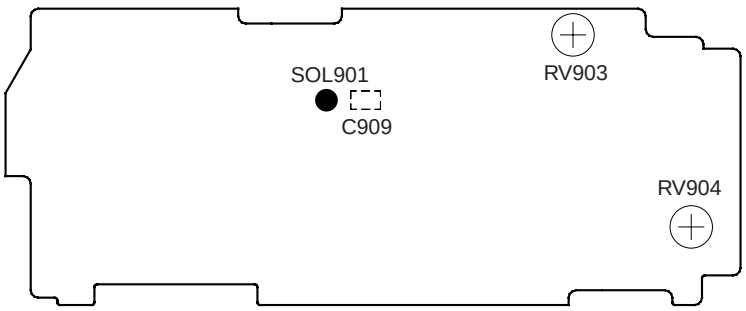

Fig. 5-1-20.

1-5-6. Vertical Amplitude Adjustment (VF-99 board)

Mode	Playback
Signal	Alighment tape : For checking operations (WR5-5NSP (NTSC)) (WR5-5CSP (PAL)) Monoscope section
Adjusting Element	RV903
Specified Value	10 ± 3%

Adjusting method:

1) Adjust RV903 so that the vertical direction over scan becomes 10 ± 3% (Top and bottom totals).

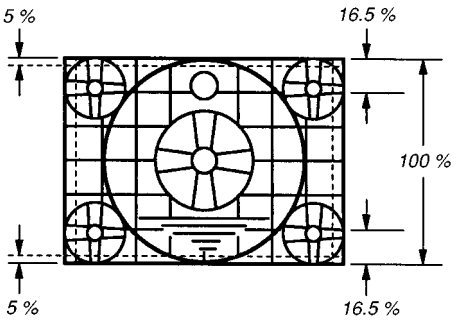

Fig. 5-1-21.

1-5-7. Brightness Adjustments (VF-99 board)

Mode	Playback
Signal	Alighment tape : For checking operations (WR5-5NSP (NTSC)) (WR5-5CSP (PAL)) Monoscope section
Specified Value	RV904

Adjusting method:

1) Rotate RV904, and adjust so that the bright/dark sections of the gray scale are displayed correctly. (The bright section should be unsatisfactory till the cross hatch appears vague in the monoscope circle. The dark section should be unsatisfactory till the darkest section and the second darkest section of the gray scale cannot be differentiated.)

1-5-8. Horizontal Amplitude, Vertical Amplitude, Focus Check

"1-5-5. Horizontal Amplitude Adjustment" and "1-5-6. Vertical Amplitude Adjustment" should both satisfy the specified values. If not, perform the adjustments from the beginning again. In this case, perform "1-5-7. Brightness, Contrast Adjustments" again.
Moreover, check the focus, and if it found to be vague, perform "1-5-3. Focus Adjustment" and "1-5-4. Aberration Adjustment".

VF-99 BOARD (SIDE A)

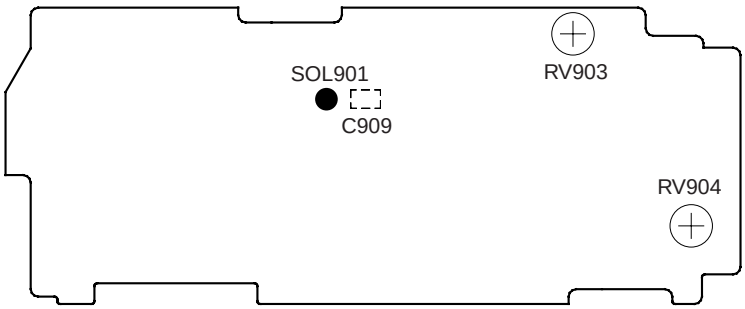

1-6. LCD SYSTEM ADJUSTMENT

Note1: The back light (fluorescent tube) is driven by a high voltage AC power supply. Therefore, do not touch the back light holder to avoid electrical shock.

Note2: When replacing the LCD unit, be careful to prevent damages caused by static electricity.

Note3: Set the brightness to the center using the LCD BRIGHT button.

Note4: 2.5"LCD model:
PD-92board, Ref. No.5000 series
3"/3.5"LCD model:
PD-93board, Ref. No.4000 series

Note5: 2.5" LCD model :
CCD-TRV15/ TRV15E/ TRV15EP/ TRV15PK/ TRV25/ TRV25PK/ TRV35/ TRV35E/ TRV65/ TRV65PK/ TRV215/ TRV615
3" LCD model : CCD-TRV93
3.5" LCD model : CCD-TRV85/ TRV815

[Adjusting connector]

Most of the measuring points for adjusting the LCD display are concentrated in the following connector.
CN5501 of the PD-92 board (2.5"LCD model)
CN4501 of the PD-93 board (3"/3.5"LCD model)
Connect the measuring instruments via the multi CPC jig (J-6082-311-A).
The following table shows the Pin No. and signal name of the connector.

Pin No.	Signal name	Pin No.	Signal name
1	VB	2	VCO VOLTAGE.
3	VG	4	PANEL COM
5	VR	6	N.C.
7	SYNC / HD	8	H START
9	GND	10	GND

[LCD type check]

By measuring the resistor value between Pin ⑥ of CN5501/4501 and Pin ⑩ of CN5501/4501, the type of LCD can be discriminated.

PD-92board CN5501

Resistor value	LCD type	Model
5.6kΩ	2.5" TYPE S NTSC	CCD-TRV35/ TRV65 TRV65PK/ TRV615
8.2kΩ	2.5" TYPE S PAL	CCD-TRV35E
1.5kΩ	2.5" TYPE C NTSC	CCD-TRV15/ TRV15PK/ TRV25/ TRV25PK/TRV215
3.9kΩ	2.5" TYPE C PAL	CCD-TRV15E/ TRV15EP

PD-93board CN4501

Resistor value	LCD type	Model
4.7kΩ	3"/3.5" TYPE S NTSC	CCD-TRV93
1.0kΩ	3"/3.5" TYPE C NTSC	CCD-TRV85/ TRV815

1. LCD Initial Data Input

Mode	VTR stop
Signal	Arbitrary
Adjustment Page	E
Adjustment Address	A5 to A7, B0 to B9, BF, C0, C1, CF, D0 to DD

Adjusting method:
1) Select page: 0, address: 01, and set data: 01.
2) Select page: D, and input the data in the following table.

Note: To write in the non-volatile memory (EEPROM), press the PAUSE button of the adjusting remote commander each time to set the data.

3) Select page: 0, address: 01, and set data: 00.

Address	Data	Remark
A5	53	Fixed value
A6	96	Fixed value
A7	68	Fixed value
B0	3F	Fixed value
B1	C8	Fixed value
B2	1F	Fixed value
B3	1F	Fixed value
B4	00	Fixed value
B5	00	Fixed value
B6	Note1	Fixed value
B7	4E	Fixed value
B8	08	Fixed value
B9	00	Fixed value
BF	80	[VCO adjustment] <Fixed value>
C0	Note2	Fixed value
C1	Note3	Fixed value
CF	69/84	Bright adjustment (Note 5)
D0	7A/77	Color adjustment (Note 5)
D1	AA/98	White balance adjustment (Note 5)
D2	9C/7B	White balance adjustment (Note 5)
D3	B1/DC	Contrast adjustment (Note 5)
D4	B1/80	D range adjustment (Note 5)
D5	94/89	V-COM level adjustment (Note 5)
D6	80	VCO adjustment
D7	80	V-COM level adjustment
D8	80	Fixed value
D9	Note4	[Color adjustment] <Fixed value>
DA	80	Fixed value
DB	52	Fixed value
DC	99	Fixed value
DD	99	Fixed value

< > : NTSC model only
[ ] : PAL model only

Note1: B0: NTSC model
F0: PAL model

Note2: A4: 2.5" LCD model
8B: 3" LCD model
8D: 3.5" LCD model

Note3: D8: 2.5" LCD TYPE S model
CF: 2.5" LCD TYPE C model
B8: 3" LCD model
A9: 3.5" LCD model

Note4: 00: NTSC model
7A: LCD TYPE S PAL model
77: LCD TYPE C PAL model

Note5: LCD TYPE S/LCD TYPE C

2. VCO Adjustment (PD-92/93 board)

Set the VCO freerun frequency. If deviated, the LCD screen will be blurred.

Mode	VTR stop
Signal	No signal
Measurement point	Pin ② of CN5501/4501 (VCO VOLTAGE) of PD-92/93 board
Measuring instrument	Oscilloscope
Adjustment page	E
Adjustment address	D6 (NTSC) D6, BF (PAL)
Specified value	A = 2.75 ± 0.02V (LCD TYPE S model) A = 1.70 ± 0.02V (LCD TYPE C model)

Note1: NTSC model: CCD-TRV15/ TRV15PK/ TRV25/ TRV25PK/ TRV35/ TRV65/ TRV65PK/ TRV85/ TRV93/ TRV215/ TRV615/ TRV815

PAL model: CCD-TRV15E/ TRV15EP/ TRV35E

Note2 : LCD TYPE S model : CCD-TRV35/ TRV35E/ TRV65/ TRV65PK/ TRV93/ TRV615

LCD TYPE C model : CCD-TRV15/ TRV15PK/ TRV15E/ TRV15EP/ TRV25/ TRV25PK/ TRV85/ TRV215/ TRV815

Adjusting method:

1) Select page: 0, address: 01, and set data: 01.
2) Select page: 3, address: 01, set data: 55, and press the PAUSE button of the adjusting remote commander.
3) Select page: 2, address: 7D, and set data: 00.
4) Select page: E, address: D6, change the data and set the VCO VOLTAGE (A) to the specified value.
5) Press the PAUSE button of the adjusting remote commander.
7) Only for PAL model, select page: E, address: D6, and read the data (D_{D6}).
8) Only for PAL model, calculate the adjustment data (hexadecimal) from the following equations (hexadecimal calculation), and input to address: BF. (Refer to Table 5-1-2. Hexadecimal-Decimal conversion Table.)

   CCD-TRV35E :

   $D_{BF} = D_{D6}$

   CCD-TRV15E/TRV15EP :

   When $D_{D6} \geqq 55$

   $D_{BF} = D_{D6} - 55$

   When $D_{D6} < 55$

   $D_{BF} = 00$

Note2: After setting data, be sure to press the PAUSE button.

9) Select page: 3, address: 01, set data: 00, and press the PAUSE button of the adjusting remote commander.
10) Select page: 0, address: 01, and set data: 00.

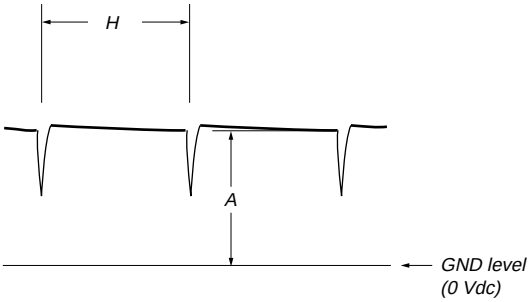

Fig. 5-1-22.

3. D range Adjustment (PD-92/93 board)

Set the D range of the RGB decoder used to drive the LCD to the specified value. If deviated, the LCD screen will become blackish or saturated (whitish).

Mode	VTR stop
Signal	No signal
Measurement point	Pin ③ of CN5501/4501 (VG) of PD-92/93 board External trigger : Pin ④ of CN5501/ CN4501 (PANEL COM)
Measuring instrument	Oscilloscope
Adjustment page	E
Adjustment address	D4
Specified value	A = 3.62 ± 0.05V (LCD TYPE S model) A = 2.98 ±0.05V (LCD TYPE C model)

Note1 : Press the DISPLAY button and erase the screen indictors on the LCD screen.

Note2 : LCD TYPE S model : CCD-TRV35/TRV35E/ TRV65/ TRV65PK/ TRV93/ TRV615

LCD TYPE C model : CCD-TRV15/ TRV15PK/ TRV15E/ TRV15EP/ TRV25/ TRV25PK/ TRV85/ TRV215/ TRV815

Adjusting method:

1) Select page: 0, address: 01, and set data: 01.
2) Select page: 3, address: 01, set data: 55, and press the PAUSE button of the adjusting remote commander.
3) Select page: 2, address: 7D, and set data: 00.
4) Select page: E, address: D4, change the data and set the voltage (A) between the reversed waveform pedestal and non-reversed waveform pedestal to the specified value.
5) Press the PAUSE button of the adjusting remote commander.
6) Select page: 3, address: 01, set data: 00, and press the PAUSE button of the adjusting remote commander.
7) Select page: 0, address: 01, and set data: 00.

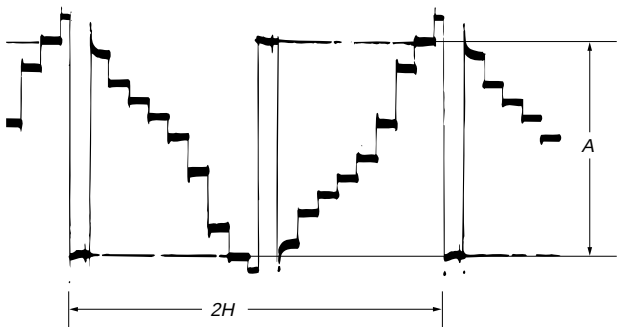

Fig. 5-1-23.

4. Bright Adjustment (PD-92/93 board)

Set the level of the VIDEO signal for driving the LCD to the specified value. If deviated, the screen image will be blackish or saturated (whitish).

Mode	VTR stop
Signal	No signal
Measurement point	Pin ③ of CN5501/4501 (VG) of PD-92/93 board External trigger : Pin ④ of CN5501/ CN4501 (PANEL COM)
Measuring instrument	Oscilloscope
Adjustment page	E
Adjustment address	CF
Specified value	A = 1.94 ± 0.05V (LCD TYPE S model) A = 1.34 ± 0.05V (LCD TYPE C model)

Note1 : LCD TYPE S model : CCD-TRV35/ TRV35E/ TRV65/ TRV65PK/ TRV93/ TRV615
LCD TYPE C model : CCD-TRV15/ TRV15PK/ TRV15E/ TRV15EP/ TRV25/ TRV25PK/ TRV85/ TRV215/ TRV815

Adjusting method:

1) Select page: 0, address: 01, and set data: 01.
2) Select page: 3, address: 01, set data: 55, and press the PAUSE button of the adjusting remote commander.
3) Select page: 2, address: 7D, and set data: 40.
4) Select page: E, address: CF, change the data and set the voltage (A) between the pedestal and white to the specified value. (The data of address: CF should be “41” to “BF”.)
5) Press the PAUSE button of the adjusting remote commander.
6) Select page: 3, address: 01, set data: 00, and press the PAUSE button of the adjusting remote commander.
7) Select page: 2, address: 7D, and set data: 00.
8) Select page: 0, address: 01, and set data: 00.

Fig. 5-1-24.

5. Contrast Adjustment (PD-92/93 board)

Set the level of the VIDEO signal for driving the LCD to the specified value. If deviated, the screen image will be blackish or saturated (whitish).

Mode	VTR stop
Signal	No signal
Measurement point	Pin ③ of CN5501/4501 (VG) of PD-92/93 board External trigger : Pin ④ of CN5501/ CN4501 (PANEL COM)
Measuring instrument	Oscilloscope
Adjustment page	E
Adjustment address	D3
Specified value	A = 3.52 ± 0.07V (LCD TYPE S model) A = 2.54 ± 0.07V (LCD TYPE C model)

Note1 : LCD TYPE S model : CCD-TRV35/ TRV35E/ TRV65/ TRV65PK/ TRV93/ TRV615
LCD TYPE C model : CCD-TRV15/ TRV15PK/ TRV15E/ TRV15EP/ TRV25/ TRV25PK/ TRV85/ TRV215/ TRV815

Adjusting method:

1) Select page: 0, address: 01, and set data: 01.
2) Select page: 3, address: 01, set data: 55, and press the PAUSE button of the adjusting remote commander.
3) Select page: 2, address: 7D, and set data: 00.
4) Select page: E, address: D3, change the data and set the voltage (A) between the pedestal (0 IRE) and 100 IRE to the specified value.
5) Press the PAUSE button of the adjusting remote commander.
6) Select page: 3, address: 01, set data: 00, and press the PAUSE button of the adjusting remote commander.
7) Select page: 0, address: 01, and set data: 00.

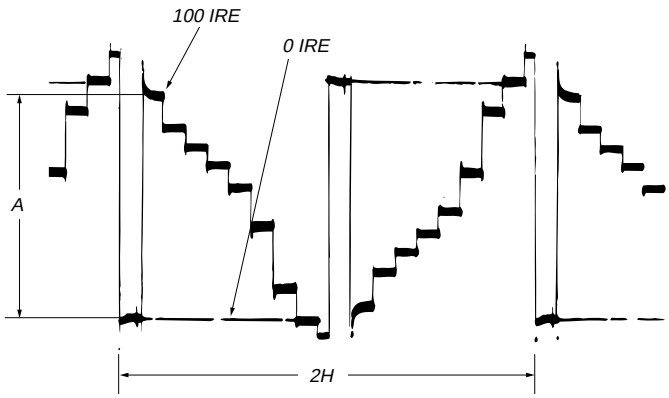

Fig. 5-1-25.

6. V-COM Level Adjustment (PD-92/93 board)

Set the common electrode drive signal level of LCD to the specified value.

Mode	VTR stop
Signal	No signal
Measurement point	Pin ④ of CN5501/CN4501 (PANEL COM) of PD-92/93 board
Measuring instrument	Oscilloscope
Adjustment page	E
Adjustment address	D5
Specified value	A = 6.50 ± 0.05V (LCD TYPE S NTSC model) A = 6.43 ± 0.05V (LCD TYPE S PAL model) A = 5.10 ± 0.05V (LCD TYPE C model)

Note1 : Perform "Bright Adjustment" and "Contrast Adjustment" before this adjustment.

Note2 : LCD TYPE S model : CCD-TRV35/ TRV35E/ TRV65/ TRV65PK/ TRV93/ TRV615
LCD TYPE C model : CCD-TRV15/ TRV15PK/ TRV15E/ TRV15EP/ TRV25/ TRV25PK/ TRV85/ TRV215/ TRV815

Adjusting method:

1) Select page: 0, address: 01, and set data: 01.
2) Select page: 3, address: 01, set data: 55, and press the PAUSE button of the adjusting remote commander.
3) Select page: 2, address: 7D, and set data: 00.
4) Select page: E, address: D5, change the data and set the PANEL COM signal level (A) to the specified value.
5) Press the PAUSE button of the adjusting remote commander.
6) Select page: 3, address: 01, set data: 00, and press the PAUSE button of the adjusting remote commander.
7) Select page: 0, address: 01, and set data: 00.

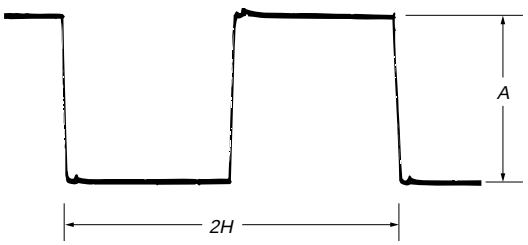

Fig. 5-1-26.

7. Color Adjustment (PD-92/93 board)

Set the color saturation to the standard value. If deviated, the color will be to dark or light.

Mode	VTR stop
Signal	No signal
Measurement point	Pin ③ of CN5501/4501 (VG) of PD-92/93 board External trigger : Pin ④ of CN5501/ CN4501 (PANEL COM)
Measuring instrument	Oscilloscope
Adjustment page	E
Adjustment address	D0 (NTSC) D0, D9 (PAL)
Specified value	2.5" LCD TYPE S model : A = 0.05 ± 0.05V (NTSC) A = 0.13 ± 0.05V (PAL) 2.5" LCD TYPE C model : A = 0.00 ± 0.05V (NTSC) A = 0.05 ± 0.05V (PAL) 3" LCD TYPE S model : A = 0.05 ± 0.05V (NTSC) 3.5" LCD TYPE C model : A = 0.07 ± 0.05V (NTSC)

Note1: 2.5" LCD TYPE S NTSC model :
CCD-TRV35/ TRV65/ TRV65PK/ TRV615
2.5" LCD TYPE S PAL model : CCD-TRV35E
2.5" LCD TYPE C NTSC model :
CCD-TRV15/ TRV15PK/ TRV25/ TRV25PK/ TRV215
2.5" LCD TYPE C PAL model : CCD-TRV15E/ TRV15EP
3" LCD TYPE S model : CCD-TRV93
3.5" LCD TYPE C model : CCD-TRV85/ TRV815

Adjusting method:

1) Select page: 0, address: 01, and set data: 01.
2) Select page: 3, address: 01, set data: 57, and press the PAUSE button of the adjusting remote commander.
3) Select page: 2, address: 7D, and set data: 20.
4) Select page: E, address: D0, change the data and set the voltage (A) between the green and white to the specified value.
5) Press the PAUSE button of the adjusting remote commander.
6) Only for PAL model, select page: E, address: D9, and set the same data as page: E, address: D0, and press the PAUSE button of the adjusting remote commander.
7) Select page: 3, address: 01, set data: 00, and press the PAUSE button of the adjusting remote commander.
8) Select page: 2, address: 7D, and set data: 00.
9) Select page: 0, address: 01, and set data: 00.

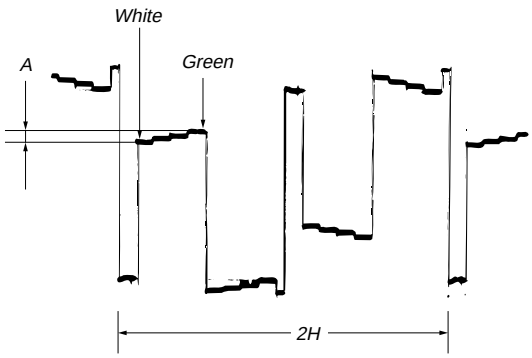

Fig. 5-1-27.

8. V-COM Adjustment (PD-92/93 board)

Set the DC bias of the common electrode drive signal of LCD to the specified value.
If deviated, the LCD display will move, producing flicker and conspicuous vertical lines.

Mode	VTR stop
Signal	No signal
Measurement point	Check on LCD display
Measuring instrument	
Adjustment page	E
Adjustment address	D7
Specified value	The brightness difference between the section Ⓐ and section Ⓑ is minimum.

Note1 : Perform “Bright Adjustment" and “Contrast Adjustment” before this adjustment.

Adjusting method:

1) Select page: 0, address: 01, and set data: 01.
2) Select page: 3, address: 01, set data: 51, and press the PAUSE button of the adjusting remote commander.
3) Select page: 2, address: 7D, and set data: 87.
4) Select page: E, address: D7, change the data so that the brightness of the section A and that of the section B is equal.
5) Press the PAUSE button of the adjusting remote commander.
6) Select page: 3, address: 01, set data: 00, and press the PAUSE button of the adjusting remote commander.
7) Select page: 2, address: 7D, and set data: 00.
8) Select page: 0, address: 01, and set data: 00.

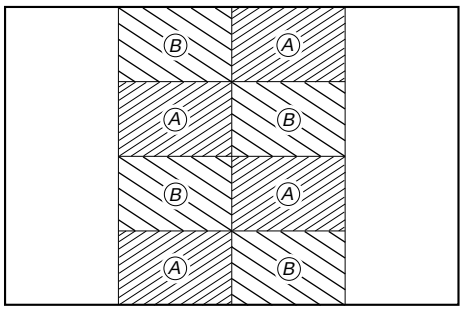

Fig. 5-1-28.

9. White Balance Adjustment (PD-92/93 board)

Correct the white balance.
If deviated, the LCD screen color cannot be reproduced.

Mode	VTR stop
Signal	No signal
Measurement point	Check on LCD display
Measuring instrument	
Adjustment page	E
Adjustment address	D1, D2
Specified value	The LCD screen should not be colored.

Note1: Check the white balance only when replacing the following parts. If necessary, adjust them.
1. LCD panel
2. Light induction plate
3. IC5502/4502

Note2 : LCD TYPE S model : CCD-TRV35/ TRV35E/ TRV65/ TRV65PK/ TRV93/ TRV615
LCD TYPE C model : CCD-TRV15/ TRV15E/ TRV15EP/ TRV15PK/ TRV25/ TRV25PK/ TRV85/ TRV215/ TRV815

Adjusting method:

1) Select page: 0, address: 01, and set data: 01.
2) Select page: 3, address: 01, set data: 51, and press the PAUSE button of the adjusting remote commander.
3) Select page: 2, address: 7D, and set data: 03.
4) Select page: E, address: D1 and D2, and set the data to the initial value.

Note: To write in the non-volatile memory (EEPROM), press the PAUSE button of the adjusting remote commander each time to set the data.

Address	Data			
	LCD TYPE S		LCD TYPE C	
	NTSC	PAL	NTSC	PAL
D1	98	94	99	97
D2	88	81	89	8D

5) Check that the LCD screen is not colored. If colored, change the data of page: E, address: D1 and D2 so that the LCD screen is not colored.

Note: To write in the non-volatile memory (EEPROM), press the PAUSE button of the adjusting remote commander each time to set the data.

6) Select page: 3, address: 01, set data: 00, and press the PAUSE button of the adjusting remote commander.
7) Select page: 2, address: 7D, and set data: 00.
8) Select page: 0, address: 01, and set data: 00.

5-2. MECHANICAL SECTION ADJUSTMENT

Mechanism Parts Adjustments

For details on the adjustments and checks of mechanical section and replacements of mechanism parts, refer to the separate volume-"8 mm Video Mechanism Adjustment Manual VII [B Mechanism]".

2-1. OPERATING WITHOUT A CASSETTE

1) Refer to "Section 2 DISASSEMBLY" and supply the power with the cabinet removed. (So that the mechanical deck can be operated.)
2) Connect the adjusting remote commander to the LANC terminal.
3) Turn on the HOLD switch of the adjusting remote commander.
4) Close the cassette compartment without loading a cassette and complete loading.
5) Select page: 0, address: 01, and set data: 01.
6) Select page: F, address: 2A, and set data: 01, and press the PAUSE button of the adjusting remote commander.
7) Select page: D, address: 10, and set data: 10, and press the PAUSE button of the adjusting remote commander.
8) Disconnect the power supply of the unit.
   By carrying out the above procedure, the unit can be operated without loading a cassette.
   Be sure to carry out "Processing after Operations" after checking the operations.
   Set the data of page: D, address: 10 to the following if the sensor ineffective mode, forced PLAYER (VTR) power supply ON mode or forced camera power supply ON mode are to be used together.
   Forced VTR power supply ON mode 12
   Forced camera power supply ON mode 11

[Processing after Operations]

1) Select page: 0, address: 01, and set data: 01.
2) Select page: F, address: 2A, and set data: 00, and press the PAUSE button of the adjusting remote commander.
3) Select page: D, address: 10, and set data: 00, and press the PAUSE button of the adjusting remote commander.
4) Select page: 0, address: 01, and set data: 00.
5) Disconnect the power supply of the unit.

2-2. TAPE PATH ADJUSTMENT

1. Preparations for adjustments

1) Clean the tape path face (tape guide, drum, capstan shaft, pinch roller).
2) Connect the adjusting remote commander to the LANC terminal.
3) Turn on the HOLD switch of the adjusting remote commander.
4) Select page: 0, address: 01, and set data: 01.
5) Select page: F, address: 2A, and set data: 04 and press the PAUSE button of the adjusting remote commander.
   (Be sure to perform "Processing after operations" after completing adjustments.
6) Connect the oscilloscope.
   Channel 1: Pin ⑥ of CN910 of VC-195 board
   External trigger: Pin ⑪ of CN910 of VC-195 board
   (Connect the oscilloscope via the CPC-7 jig (J-6082-382-A).)
7) Playback the alignment tape for tracking.
   WR5-1NP: For NTSC model: CCD-TRV15/ TRV15PK/ TRV25/ TRV25PK/ TRV35/ TRV65/ TRV65PK/ TRV85/ TRV93/ TRV215/ TRV615/ TRV815
   WR5-1CP: For PAL model: CCD-TRV15E/ TRV15EP/ TRV35E
8) Check that the RF waveform of the oscilloscope is flat at both the entrance and the exit.
   If not flat, perform necessary adjustment according to the separate "8 mm Video Mechanical Adjustment Manual VII (B Mechanism)".
9) Perform "Processing after operations", after completing adjustments.

Pin No.	Signal Name	Pin No.	Signal Name
1	LANC SIG	9	RF AGC OUT
2	XCPC IN	10	REC RF
3	IR VIDEO	11	RF SWP
4	AFC F0	12	CAP FG
5	BPF MONI	13	EVF BL
6	PB RF	14	EVF BL 4.75V
7	RF AGC IN	15	VCO
8	REG GND	16	EVF VG

CN910 of VC-195 board

[Processing after operations]

1) Connect the adjusting remote commander, and turn on the HOLD switch.
2) Select page: 0, address: 01, and set data: 01.
3) Select page: F, address: 2A, and set data: 00.
4) Press the PAUSE buttonA of the adjusting remote commander.
5) Select page: 0, address: 01, and set data: 00.
6) Remove the power supply from the unit.

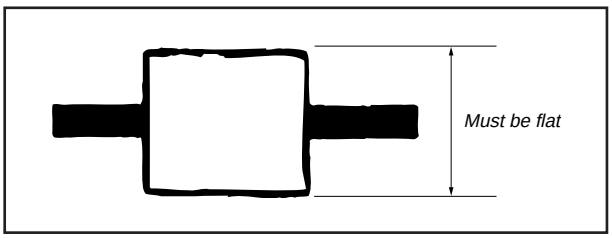

Fig. 5-2-1.

5-3. VIDEO SECTION ADJUSTMENTS

When performing adjustments, refer to the layout diagrams for adjustment related parts beginning from page 5-62.

3-1. PREPARATIONS BEFORE ADJUSTMENT

The following adjusting instruments are used for adjusting the video section.

3-1-1. Equipments to be Used

1) TV monitor
2) Oscilloscope: 2 phenomena, band 30 MHz or wider, with delay mode. (Use a 10:1 probe unless specified otherwise.)
3) Frequency counter
4) Pattern generator with video output terminal
5) Digital voltmeter
6) Audio generator
7) Audio level meter
8) Audio distortion meter
9) Audio attenuater
10) Regulated power supply
11) Alignment tape
    [For NTSC model]
    - For tracking adjustment (WR5-1NP)
      Part Code: 8-967-995-02
    - For video frequency characteristics adjustment (WR5-7NE) Part Code: 8-967-995-13
    - For checking Standard 8 mode operations
      For LP (WR5-4NL)
      Part Code: 8-967-995-51
      For SP (WR5-5NSP)
      Part Code: 8-967-995-42
      Note: The following alignment tapes can also be used.
      WR5-4NSP (8-967-995-41)
    - For checking Hi8 mode operations
      For SP (WR5-8NSE)
      Part Code: 8-967-995-43
      For LP (WR5-8NLE)
      Part Code: 8-967-995-52
    - For checking AFM stereo operations (WR5-9NS)
      Part Code: 8-967-995-23
      For checking BPF adjustment (WR5-11NS)
      Part Code: 8-967-995-71

    [For PAL model]
    - For tracking adjustment (WR5-1CP)
      Part Code: 8-967-995-07
    - For video frequency characteristics adjustment (WR5-7NE) Part Code: 8-967-995-18
    - For checking Standard 8 mode operations
      For LP (WR5-4CL)
      Part Code: 8-967-995-56
      For SP (WR5-5CSP)
      Part Code: 8-967-995-47
      Note: The following alignment tapes can also be used.
      1) WR5-3CL (8-967-995-36)
      2) WR5-4CSP (8-967-995-46)
    - For checking AFM stereo operations (WR5-9CS)
      Part Code: 8-967-995-28
      For checking BPF adjustment (WR5-11CS)
      Part Code: 8-967-995-76
12) Remote commander for adjustment (J-6082-053-B)
13) CPC-7 jig Part Code: J-6082-382-A
    Note : Connect the adjusting remote commander to the LANC jack, and set the HOLD switch to the “ADJ” side.
14) Power code Part Code: J-6082-223-A
15) AFM DEV jig (J-6082-312-A)
16) IR Receiving jig (J-6082-383-A)
17) Extension cable (48P, 0.8mm) (J-6082-188-A)

3-1-2. Precautions on Adjusting

1) The adjustments of this unit are performed in the VTR mode or camera mode.
   To set to the VTR mode, set the power switch to "VTR" (or "PLAYER") or set the "Forced VTR Power ON mode" using the adjusting remote commander (Note 1).
   To set to the Camera mode, set the power switch to "CAMERA" or set the "Forced Camera Power ON mode" using the adjusting remote commander (Note 2).
   After completing adjustments, be sure to exit the "Forced VTR Power ON Mode" or "Forced Camera Power ON Mode". (Note 3)
2) By setting the "Forced VTR Power ON mode" or "Forced Camera Power ON mode", the video section can be operate even if even if the front panel block (MA-311/312/331 board, power switch, microphone unit) has been removed. When removing the front panel block disconnect the following connector.
   1. VC-195 board CN903 (23P 0.5mm)
3) The lens block (CD-197/198 board) need not be connected except during battery end adjustment. To remove, disconnect the following connectors.
   1. VC-195 board CN501 (16P, 0.5mm)
   2. VC-195 board CN551 (23P, 0.5mm)
4) The intelligent accessory shoe (Intelligent accessory shoe model) or video light (Video light model) need not be assembled. If removing it. disconnect the following connector.
   1. VC-195 board CN909 (10P, 0.5mm)
5) Cabinet (R) (Camera function switch (CF-50/51board), LCD block, viewfinder) need not be connected. But removing the cabinet (R) (removing the VC-195 board CN911) means removing the lithium 3V power supply (CF-50/51 board) , data such as date, time, user-set menus will be lost. After completing adjustments, reset these data. If the cabinet (R) has been removed, the self-diagnosis data, data on history of use (total drum rotation time etc.) will be lost. Before removing, note down the self-diagnosis data and data on the history use. (Refer to the "Service Mode" for the data on the history use.) To remove the cabinet (R), disconnect the following connectors.
   1. VC-195 board CN911 (50P, 0.5mm)
   2. DD-105 board CN933 (11P, 1.0mm)

Note 1: Setting the "Forced VTR Power ON" mode (VTR mode)
1) Select page: 0, address: 01, and set data: 01.
2) Select page: D, address: 10, set data: 02, and press the PAUSE button of the adjusting remote commander.

The above procedure will enable the VTR power to be turned on with the front panel block removed.
After completing adjustments, be sure to exit the "Forced VTR Power ON mode".

Note 2: Setting the "Forced Camera Power ON" mode (Camera mode)
1) Select page: 0, address: 01, and set data: 01.
2) Select page: D, address: 10, set data: 01, and press the PAUSE button of the adjusting remote commander.

The above procedure will enable the camera power to be turned on with the front panel block removed.
After completing adjustments, be sure to exit the "Forced Camera Power ON mode".

Note 3: Exiting the "Forced Power ON" mode
1) Select page: 0, address: 01, and set data: 01.
2) Select page: D, address: 10, set data: 00, and press the PAUSE button of the adjusting remote commander.
3) Select page: 0, address: 01, and set data: 00.

3-1-3. Adjusting Connectors

Some of the adjusting points of the video section are concentrated at VC-195 board CN910. Connect the measuring instruments via the CPC-7 jig (J-6082-382-A). The following table lists the pin numbers and signal names of CN910.

Pin No.	Signal Name	Pin No.	Signal Name
1	LANC SIG	9	RF AGC OUT
2	XCPC IN	10	REC RF
3	IR VIDEO	11	RF SWP
4	AFC F0	12	CAP FG
5	BPF MONI	13	EVF BL
6	PB RF	14	EVF BL 4.75V
7	RF AGC IN	15	VCO
8	REG GND	16	EVF VG

Table 5-3-1.

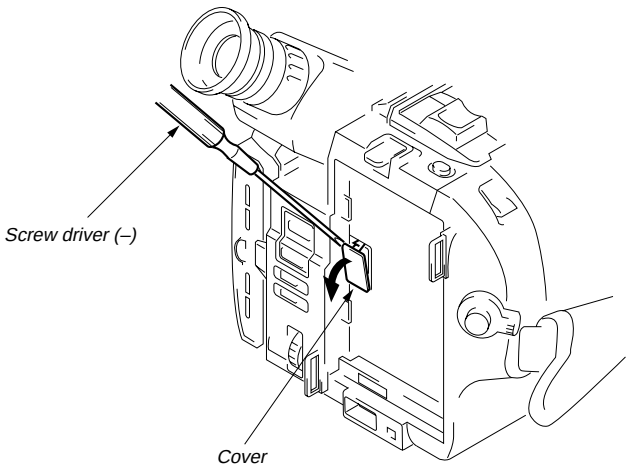

Fig. 5-3-1.

3-1-4. Connecting the Equipments

Connect the measuring instruments as shown in Fig. 5-3-2 and perform the adjustments.

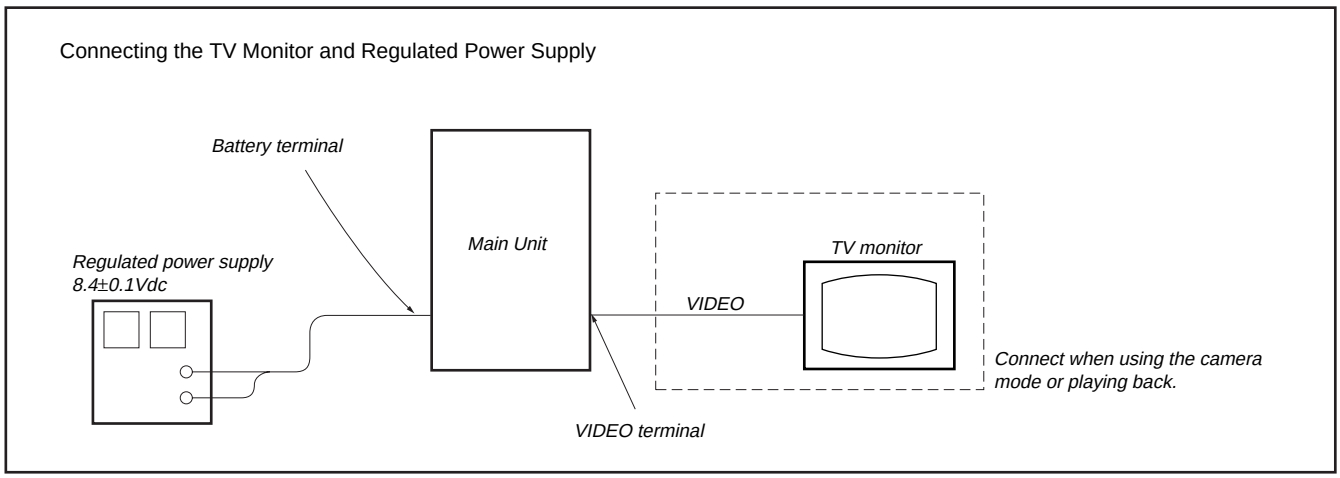

Fig. 5-3-2.

3-1-5. Alignment Tape

The following table lists alignment tapes which are available. Use the tape specified in the signal column for each adjustment. If the type of tape to be used for checking operations is not specified, use whichever type.

Name	Record-ing mode	Tape type	Tape speed	Usage
Tracking WR5-1NP (NTSC) WR5-1CP (PAL)	Standard 8 mm	MP	SP	Tape path adjustment Switching position adjustment
Video frequency characteristics WR5-7NE (NTSC) WR5-7CE (PAL)	Hi8	ME	SP (NTSC) LP (PAL)	Frequency characteristics adjustment
Operation check (SP mode) WR5-5NSP (NTSC) WR5-5CSP (PAL)	Standard 8 mm	MP	SP	Checking operations
Operation check (SP mode) WR5-8NSE (NTSC) WR5-8CSE (PAL)	Hi8	ME	SP	
Operation check (LP mode) WR5-4NL (NTSC) WR5-4CL (PAL)	Standard 8 mm	MP	LP	
Operation check (LP mode) WR5-8NLE (NTSC) WR5-8CLE (PAL)	Hi8	ME	LP	
AFM stereo Operation check WR5-9NS (NTSC) WR5-9CS (PAL)	Standard 8 mm	MP	SP	AFM stereo Checking operations
BPF adjustment WR5-11NS (NTSC) WR5-11CS (PAL)	Standard 8 mm	MP	SP	BPF adjustment

Tape type
MP ..... Particle type metal tape
ME ..... Evaporated type metal tape

Table 5-3-2.

Fig. 5-3-3. shows the 75% color bar signals recorded on the alignment tape.

Note: Measure using the VIDEO terminal (Terminated at 75 Ω).

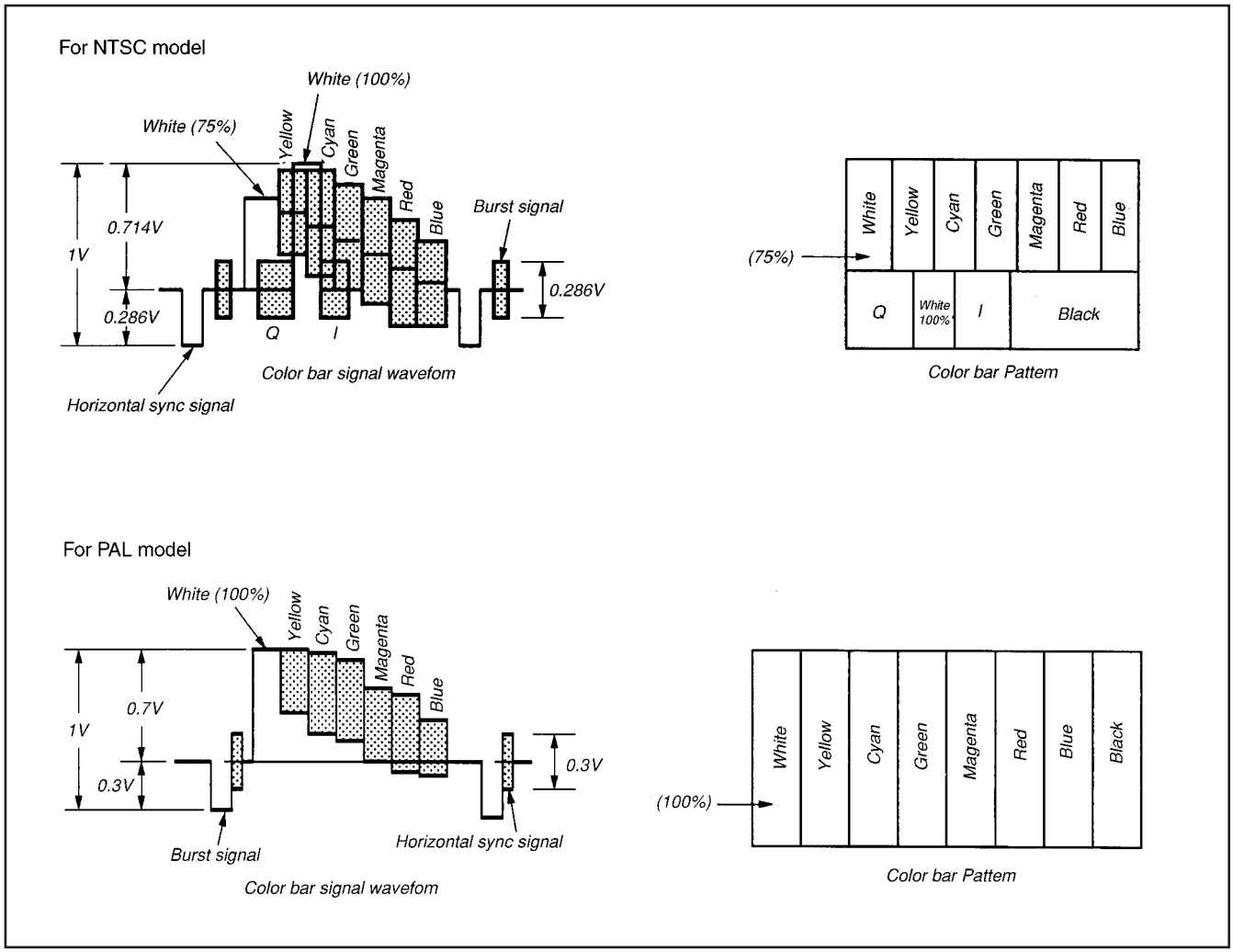

Fig. 5-3-3. Color Bar Signals of the Alignment Tape

3-1-6. Input/Output Level and Impedance

Video input/output

Phono jack, 1 Vp-p, 75Ω,
unbalanced, sync negative

S video input/output (Hi8 model)

4-pin mini DIN
Luminance signal:
1Vp-p, 75Ω, unbalanced, sync negative
Chrominance signal:
0.286Vp-p 75Ω, unbalanced (NTSC)
0.3Vp-p 75Ω, unbalanced (PAL)

Audio input/output

Phono jack,
Input: –7.5 dBs, input impedance more than 47 kΩ
Output: –7.5 dBs, (at load impedance 47 kΩ), impedance less than 2.2 kΩ

3-1-7. Recording Mode (Standard 8/Hi8) switching (Hi8 model)

The record mode (Standard 8/Hi8) of this unit switches as shown in the following table. The playback mode (Standard 8/Hi8) switches automaticaly according to the recording mode of the tape played back.

Tape Used	Recording Mode
ME	Hi8
Hi8 MP	
MP	Standard 8

3-1-8. Service Mode

Additional note on adjustment

Note: After the completion of the all adjustments, cancell the service mode by either of the following ways.

1) Unplug the main power supply and remove the lithium battery. (In this case, date and time and menu setting have been set by users are canceled. Perform resetting.)
2) After data on page: D and F is restored, select page: 0, address: 01, and return the data to 00. And when data on page: 3 is changed, return the data to the original condition.

1. Test mode setting

Set/release each test mode. Select page: 0, address: 01, and set data: 01 before setting the data of page D and F.

Page F	Address 2A

Data	Function
00	Normal
01	Test mode Various emergency prohibitions and releases Drum emergency, capstan emergency, loading motor emergency, reel emergency, tape top and end, DEW detection

Page D	Address 10

Data	Function
00	Normal
01	Camera power ON
02	VTR power ON
03	Camera+VTR power ON

* For page D and F, the data set will be recorded in the nonvolatile memory by pressing the PAUSE button on the adjusting remote commander. Take note that, in this case, the test mode will not be released even if the main power has been turned off (8.4 Vdc).

* Be sure to return this address data to 00 after completing adjustments/repairs and press the PAUSE button of the adjusting remote commander. And select page: 0, address: 01, and set data: 00.

2. Emergency Memory Address

Page F	Address 10 to 1B

Address	Contents
10	1st EMG code
12	Upper: MSW code when the mechanism starts shifting the 1st time Lower: MSW code when the 1st emergency occurs
13	Lower: Target MSW code of the 1st emergency occurs
14	2nd EMG code
16	Upper: MSW code when the mechanism starts shifting the 2nd time Lower: MSW code when the 2nd emergency occurs
17	Lower: Target MSW code of the 2nd emergency occurs
18	Last EMG code
1A	Upper: MSW code when the mechanism starts shifting the last time Lower: MSW code when the last emergency occurs
1B	Lower: Target MSW code of the last emergency occurs

When there are no emergency, data 00 will be written in the above addresses (10 to 1B). When the first emergency occurs, the data corresponding to the emergency will be written in the address (10 to 13) for this first emergency. In the same way, when the second emergency occurs, the data corresponding to the emergency will be written in the address (14 to 17) for this second emergency.
The data corresponding to the emergency occurring the last will be written in the address (18 to 1B) for this last emergency.
Therefore the data of addresses 18 to 1B are renewed each time an emergency occurs.

Note 1: Be sure to rewrite the data of addresses 10 to 1B to 00 after repairs/adjustments.

Note 2: When rewriting the data, be sure to press the PAUSE buttton of the remote commander after setting the data.

2-1. EMG CODE (Emergency Code)

The codes shown in the following table which correspond to errors that occur are recorded in addresses 10, 14, and 18.

Code	Type of Emergency
00	No error
10	Loading motor time-out during load
11	Loading motor time-out during unload
20	T reel emergency (reel slack) during unloading
21	S reel emergency (reel slack) during unloading
22	T reel emergency
23	S reel emergency
30	FG emergency at the start up of the capstan
31	FG emergency during the normal rotation of the capstan
40	FG emergency at the start up of the drum
41	PG emergency at the start up of the drum
42	FG emergency during the normal rotation of the drum
43	PG emergency during the normal rotation of the drum
44	Phase emergency during the normal rotation of the drum

2-2. MSW Codes

- The lower parts of the data of addresses 12, 16 and 1A represent the MSW codes (mode switch, mechanism position) when errors occurs.
- The upper parts of the data of addresses 12, 16 and 1A represent, when the mechanism position is to be moved, the MSW codes at the start of movement (when moving the loading motor).
- The lower parts of the data of addresses 13, 17 and 1B represent the MSW codes of the desired movement when the mechanism position is to be moved.

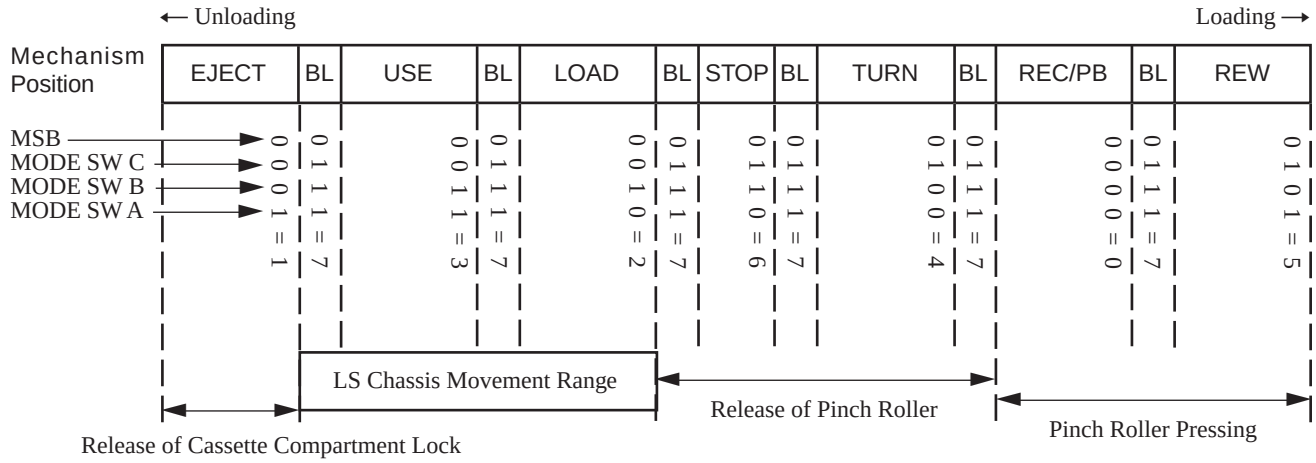

Mechanism Position	MSW Code	Contents
EJECT	1	Position at which the cassette compartment lock is released. The mechanism will not move any further in the unloading direction.
BL	7	BLANC code. Between two codes. The mechanism will not be stopped by this code while it is operating.
USE	3	EJECT completion position. When the cassette is ejected, the mechanism will stop at this position.
LOAD	2	Code during loading/unloading. Code that is used while the LS chassis is moving.
STOP	6	Normal stop position. The pinch roller separates, the tension regulator returns, and the brakes of both reels turn on.
TURN	4	Position at which is used when the pendulum gear swings from S to T or from T to S.
RECP/PB	0	PB, REC, CUE, REV, PAUSE, FF positions. The pinch roller is pressed and tension regulator is on.
REW	5	REW position. REW are carried at this position. The mechanism will not move any further in the loading direction.

3. Bit value discrimination

Bit values must be discriminated using the display data of the adjusting remote commander for the following items. Use the table below to discriminate if the bit value is “1” or “0”.

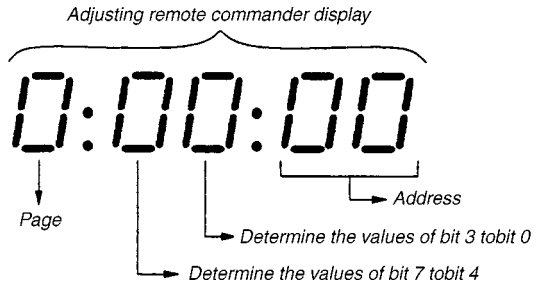

	Remote controller display	Bit value			
		bit 3 or bit 7	bit 2 or bit 6	bit 1 or bit 5	bit 0 or bit 4
	0	0	0	0	0
	1	0	0	0	1
	2	0	0	1	0
	3	0	0	1	1
	4	0	1	0	0
	5	0	1	0	1
	6	0	1	1	0
	7	0	1	1	1
Ⓐ→	8	1	0	0	0
	9	1	0	0	1
	A (R)	1	0	1	0
	B (b)	1	0	1	1
	C (c)	1	1	0	0
	D (d)	1	1	0	1
Ⓑ→	E (E)	1	1	1	0
	F (F)	1	1	1	1

(Example) If the remote commander display data is “8E”, bit values from bit7 to bit4 can be discriminated from column Ⓐ, and those from bit3 to bit0 from column Ⓑ.

4. Switch check (1)

Page 3	Address 43

Bit	Function	When bit value=1	When bit value=0
0	VTR MODE SW	OFF	ON
1	CAM MODE SW	OFF	ON
2	START/STOP SW	OFF	ON
3	EJECT SW	OFF	ON
4	CC DOWN SW	OFF	ON
5			
6			
7			

Using method:

1) Select page: 3, address: 43.
2) By discriminating the bit value of display data, the state of the switches can be discriminated.

5. Switch check (2)

Page 3	Address 60 to 66

Using method:
1) Select page: 3, address: 60 to66.
2) By discriminating the display data, the pressed key can be discriminated.

Address	Data							
	00 to 0D	0E to 29	2A to 46	47 to 68	69 to 90	91 to BE	BF to EA	EB to FF
60 (AD0: IC604 ⑨③)	LASER LINK (FK-8500 S008)	STOP (FK-8500 S001)	FF (FK-8500 S003)	REC (FK-8500 S005, 007)	EDIT SEARCH (+) (FK8500 S009)	EDIT SEARCH (–) (FK8500 S010)		No key input
61 (AD1: IC604 ⑨④)		PAUSE (FK-8500 S002)	REW (FK-8500 S004)	PLAY (FK-8500 S006)				No key input
62 (AD2: IC604 ⑨⑤)		PICTURE EFFECT (CF-50/51 S006)	MENU (CF-50/51 S010)	EXECUTE (CF-50/51 S015)	TIME (CF-50/51 S021)	5sec REC (CF-50/51 S024)	PUSHING REC (CF-50/51 S024)	NORMAL REC (CF-50/51 S024)
64 (AD4: IC604 ⑨⑦)			EXPOSURE (CF-50/51 S012)	BACK LIGHT (CF-50/51 S017)	FADER (CF-51 S027 or MF-8500 S002)	FOCUS INFINITY (MF/MR-8500 S001)	FOCUS AUTO (MF/MR-8500 S001)	FOCUS MANUAL (MF/MR-8500 S001)
65 (AD5: IC604 ⑨⑧)	DATE (CF-50/51 S003)	COUNTER RESET (CF-50/51 S008)	END SEARCH (CF-50/51 S013)	TITLE (CF-50/51 S018)	DISPLAY (CF-50/51 S022)			No key input
66 (AD6: IC604 ⑨⑨)	PROGRAM AE (CF-50/51 S004)	BRIGHT(+) (PD-92 S5801 PD-93 S4801)	BRIGHT(–) (PD-92 S5802 PD-93 S4802)	VOLUME(+) (PD-92 S5803 PD-93 S4803)	VOLUME(–) (PD-92 S5804 PD-93 S4804)	PANEL REVERSE (FP-642)	PANEL CLOSE (FP-642)	PANEL NORMAL (FP-642)

6. Headphone jack check

Page 3	Address 45

Bit	Function	When bit value=1	When bit value=0
1	Headphone jack	Headphone jack is used	

Using method:
1) Select page: 3, address: 45.
2) By discriminating the bit value of display data, the state of the headphone jack can be discriminated.

7. Input/output selection check

Page 3	Address 49

Bit	Function	When bit value=1	When bit value=0
1			
2			
3			
4	MIC jack	MIC jack is used	
5	AUDIO terminal	Monaural	Stereo
6	VIDEO terminal	VIDEO terminal is used	
7	S VIDEO terminal		S VIDEO terminal is used

Using method:
1) Select page: 3, address: 49.
2) By discriminating the bit value of display data, the state of the input/output selection can be discriminated.

8. LED, LCD (display window) check

Page 3	Address 05	Bit5

Using method:
1) Select page: 3, address: 05, and set the bit value of Bit5 to “1”.
2) Check that all LED are lit and all segments of LCD (display window) are lit.
3) Select page: 3, address: 05, and set the bit value of Bit5 to “0”.

9. Record of Use Check

Page 3	Address A2 to AA

Address	Function		Remarks
A2	Drum rotation counted time (BCD code)	Hour (H)	1000th place digit and 100th place digit of counted time (decimal digit)
A3		Hour (L)	10th place digit and 1st place digit of counted time (decimal digit)
A4		Minute	
A5	User initial power on date (BCD code)	Year	After setting the clock, set the date of power on next
A6		Month	
A7		Day	
A8	Final condensation occurrence date (BCD code)	Year	
A9		Month	
AA		Day	

Using method:
1) The record of use data is displayed at page 3, addresses: A2 to AA.

Note: This data will be erased when the coin lithium battery is removed (reset).

3-2. SYSTEM CONTROL SYSTEM ADJUSTMENT

1. Initialization of D, E, F Page Data

If the D, E, F page data is erased due to some reason, perform "1-2. INITIALIZATION OF D, E, F PAGE DATA", of "5-1. CAMERA SECTION ADJUSTMENT".

2. Battery End Adjustment (VC-195 board)

Set the battery end voltage.
If the voltage is incorrect, the life of the battery will shorten.
The image at the battery end will also be rough.

Mode	Camera recording
Subject	Arbitrary
Measurement Point	LCD display of the adjusting remote commander
Measuring Instrument	
Adjustment Page	D
Specified value	30 to 34

Note 1: The lens block and cabinet (R) must be connected.

Switch setting
1) AUTO FOCUS ..... OFF
2) LCD screen ..... Closed
3) NIGHT SHOT ..... OFF
(NIGHT SHOT model)
4) VIDEO LIGHT ..... OFF
(VIDEO LIGHT model)

Connection:
1) Connect the regulated power supply and the digital voltmeter to the battery terminal as shown in Fig. 5-3-4.

Adjusting method:
1) Adjust the output voltage of the regulated power supply so that the digital voltmeter display is 6.1±0.1Vdc.
2) Turn off the power supply.
3) Turn on the HOLD switch of the adjusting remote commander.
4) Turn on the power supply.
5) Load a cassette, and set to the camera recording mode.
6) Select page: 0, address: 01, and set data: 01.
7) Decrease the output voltage of the regulated power supply so that the digital voltmeter display is 5.30±0.01Vdc.
8) Select page: 3, address: 5D, read the data, and this data is named Dref.
9) Select page: D, address: 30, set data: Dref, and then press the PAUSE button of the adjusting remote commander.
10) Convert Dref to decimal notation, and obtain Dref '. (Refer to Table 5-1-2. "Hexadecimal-decimal conversion table")
11) Calculate D_{31}', D_{32}', D_{33}' and D_{34}' using following equations (decimal calculation), convert it to a hexadecimal number, and input each adjustment address.
Address: D_{31} D_{31}' = Dref ' + 5
Address: D_{32} D_{32}' = Dref ' + 32
Address: D_{33} D_{33}' = Dref ' + 53
Address: D_{34} D_{34}' = Dref ' + 64

Note 3: After setting each data, be sure to press the PAUSE button.

12) Select page: 0, address: 01, and set data: 00.

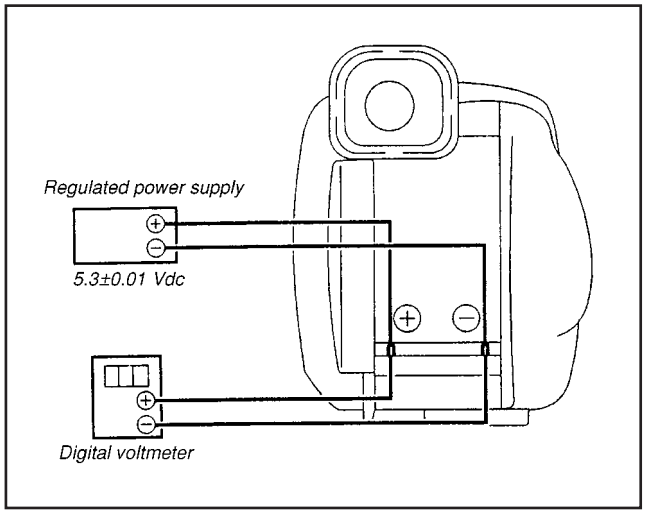

Fig. 5-3-4.

3-3. SERVO SYSTEM ADJUSTMENTS

1. CAP FG Offset Adjustment (VC-195 board)

Improve the capstan servo characteristic. If it is not correct. jitters will increase.

Mode	Camera recording (SP mode)
Subject	Arbitrary
Measurement Point	Pin ⑫ of CN910 (CAP FG)
Measuring Instrument	Oscilloscope
Adjustment Page	F
Adjustment Address	69
Specified value	Duty = 50±1%

Adjusting method:

1) Select page: 0, address: 01, and set data: 01.
2) Select page: 2, address: 01, and set data: 81, and press the PAUSE button of the adjustment remote commander. (to start up automatic CAP FG offset adjustment.)
3) Select page: 2, address: 02, and check that the data is "01".
4) Check that Duty of CAP FG signal satisfies the specified value. If not, select page: 2, address: 01, set data: 00, and press the PAUSE button, and then, repeat steps 2) to 4).
5) Select page: 2, address: 01, and set data: 00, and press the PAUSE button of the adjustment remote commander.
6) Select page: 0, address: 01, and set data: 00.

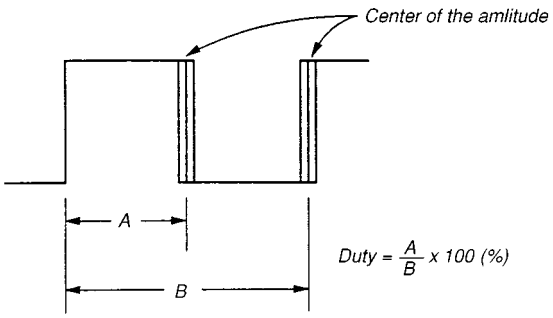

Fig. 5-3-5.

2. Switching Position Adjustment (VC-195 Board)

If deviated in this cases switching noise or jitter on the played back screen.

Mode	Playback
Signal	Alignment tape: For tracking adjustment (WR5-1NP (NTSC)) (WR5-1CP (PAL))
Measurement Point	CH1: Pin ⑪ of CN910 (RF SWP) CH2: Pin ⑥ of CN910 (PB RF)
Measuring Instrument	Oscilloscope
Adjustment Page	F
Adjustment Address	7C, 7D
Specified Value	t1 = 0±10µsec

Note 1: NTSC MODEL: CCD-TRV15/ TRV15PK/ TRV25/ TRV25PK/ TRV35/ TRV65/ TRV65PK/ TRV85/ TRV93/ TRV215/ TRV615/ TRV815
PAL MODEL: CCD-TRV15E/ TRV15EP/ TRV35E

Adjusting Method:

1) Select page: 0, address: 01, and set data: 01.
2) Select page: F, address: 2A, and set data: 20, and press the PAUSE button of the adjustment remote commander.
3) Select page: F, address: 7C, change the data and minimize "t1", and then press the PAUSE button of the adjustment remote commander. (Coarse adjustment)
4) Select page: F, address: 7D, change the data and adjust so that the switching position (t1) becomes the specified value. (Fine adjustment)
5) Press the PAUSE button of the adjustment remote commander.
6) Select page: F, address: 2A, and set data: 00, and press the PAUSE button of the adjustment remote commander.
7) Select page: 0, address: 01, and set data: 00.

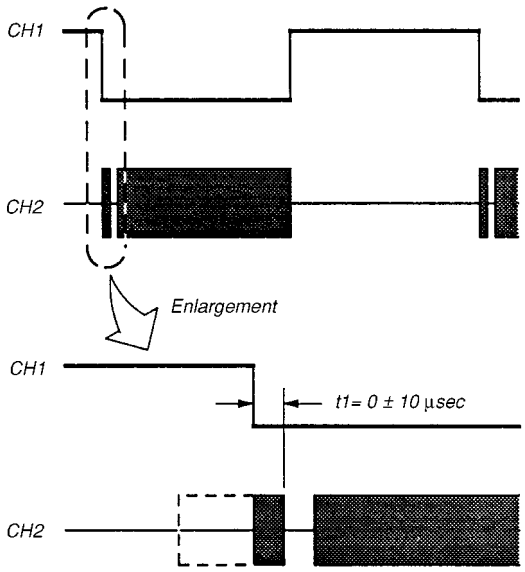

Fig. 5-3-6.

3. NTSC LP Mode Switching Position Adjustment (VC-195 Board) (CCD-TRV65/ TRV65PK/ TRV85/ TRV93/ TRV615/ TRV815)

If deviated in this cases switching noise or jitter on the LP mode played back screen.

Mode	Playback
Signal	Alignment tape: For tracking adjustment (WR5-1NP (NTSC))
Measurement Point	CH1: Pin ⑪ of CN910 (RF SWP) CH2: Pin ⑥ of CN910 (PB RF)
Measuring Instrument	Oscilloscope
Adjustment Page	F
Adjustment Address	7E, 7F
Specified Value	t1 = 0±10µsec

Adjusting Method:

1) Select page: 0, address: 01, and set data: 01.
2) Select page: F, address: 2A, set data: 60, and then press the PAUSE button of the adjustment remote commander.
3) Select page: F, address: 7E, change the data and minimize "t1", and then press the PAUSE button of the adjustment remote commander. (Coarse adjustment)
4) Select page: F, address: 7F, change the data and adjust so that the switching position (t1) becomes the specified value. (Fine adjustment)
5) Select page: F, address: 2A, set data: 00, and then press the PAUSE button of the adjustment remote commander.
6) Press the PAUSE button of the adjustment remote commander.
7) Select page: 0, address: 01, and set data: 00.

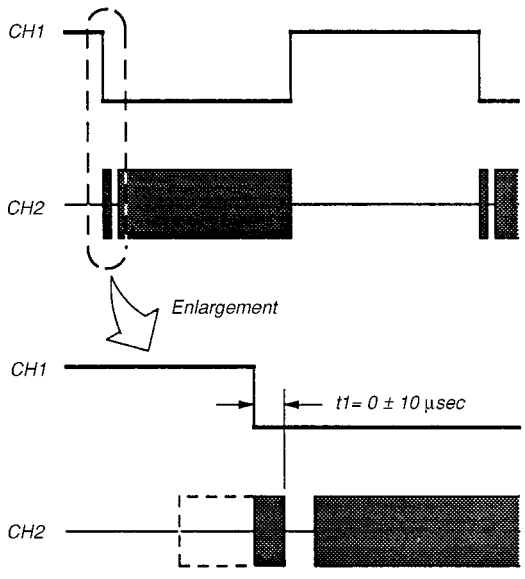

Fig. 5-3-7.

3-4. VIDEO SYSTEM ADJUSTMENTS

Video system adjustments must be performed in the following order.

[Adjusting Order]

1. 28MHz origin oscillation adjustment
2. AFC f0 adjustment
3. Filter f0 adjustment
4. Y OUT level adjustment
5. C OUT level adjustment
6. RP filter f0 adjustment
7. Hi8 REC Y current adjustment
8. Standard REC Y current adjustment
9. Hi8 REC L level adjustment
10. Standard8 REC L level adjustment
11. REC C current adjustment

1. 28 MHz Origin Oscillation Adjustment (VC-195 board)

Set the frequency of the clock for synchronization.
If deviated, the synchronization will be disrupted and the color will become inconsistent.

Mode	VTR stop
Signal	No signal
Measurement Point	Pin ⑯ of IC202 or pin ⑫ of IC501
Measuring Instrument	Frequency counter
Adjustment Page	F
Adjustment Address	2C
Specified Value	Pin ⑯ of IC202 : f=3579545±17Hz (NTSC) f=4433618.75±17Hz (PAL) Pin ⑫ of IC501 : f=14318181±68Hz (NTSC) f=14187500±55Hz (PAL)

Note 1: NTSC MODEL: CCD-TRV15/ TRV15PK/ TRV25/ TRV25PK/ TRV35/ TRV65/ TRV65PK/ TRV85/ TRV93/ TRV215/ TRV615/ TRV815
PAL MODEL: CCD-TRV15E/ TRV15EP/ TRV35E

Adjusting method:

1) Select page: 0, address: 01, and set data: 01.
2) Select page: 3, address: 01, set data: 41, and press the PAUSE button of the adjusting remote commander.
3) Select page: 2, address: 61, and set data: 30.
4) Select page: F, address: 2C, change the data and set the clock frequency(f) to the specified value.
5) Press the PAUSE button of the adjusting remote commander.
6) Select page: 2, address: 61, and set data: 10.
7) Select page: 3, address: 01, set data: 00, and press the PAUSE button of the adjusting remote commander.
6) Select page: 0, address: 01, and set data: 00.

2. AFC f0 Adjustment (VC-195 board)

Adjust the pull-in range of the A/D converted clock generator during playback.

Mode	VTR stop
Signal	No signal
Measurement Point	Pin ④ of CN910 (AGC f0)
Measuring Instrument	Digital voltmeter
Adjustment Page	F
Adjustment Address	4A
Specified Value	A = 2.10±0.05Vdc

Adjusting method:

1) Select page: 0, address: 01, and set data: 01.
2) Select page: 3, address: 01, set data: 4D, and press the PAUSE button of the adjusting remote commander.
3) Select page: F, address: 4A, change the data and set the DC voltage (A) to the specified value.
4) Press the PAUSE button of the adjusting remote commander.
5) Select page: 3, address: 01, set data: 00, and press the PAUSE button of the adjusting remote commander.
6) Select page: 0, address: 01, and set data: 00.

3. Filter f0 Adjustment (VC-195 board)

Minimize the chroma signal residual components during composite video signal input.

Mode	VTR stop
Signal	No signal
Measurement Point	Pin ③ of CN910 (IR VIDEO)
Measuring Instrument	Oscilloscope
Adjustment Page	F
Adjustment Address	4D
Specified Value	Minimum residual chroma signal components (Bellow 12mV)

Switch setting:

LASER LINK ..... ON (Red LED is lit)

Adjusting method:

1) Select page: 0, address: 01, and set data: 01.
2) Select page: 3, address: 01, set data: 4F, and press the PAUSE button of the adjusting remote commander.
3) Select page: F, address: 4D, change the data and minimize the residual chroma signal components (A).
4) Press the PAUSE button of the adjusting remote commander.
5) Select page: 3, address: 01, set data: 00, and press the PAUSE button of the adjusting remote commander.
6) Select page: 0, address: 01, and set data: 00.

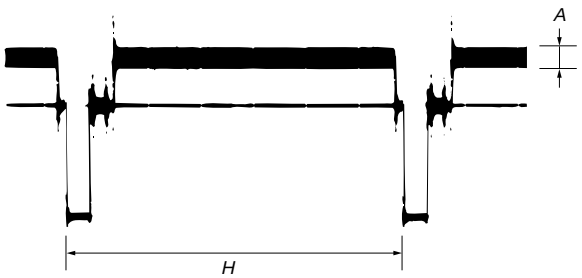

Fig. 5-3-8.

4. Y OUT Level Adjustment (VC-195 board)

Set the Y signal output level.

Mode	VTR stop
Signal	No signal
Measurement Point	Hi8 model : Y signal terminal of S VIDEO terminal (75Ω terminated) Standard 8 model : VIDEO terminal (75Ω terminated)
Measuring Instrument	Oscilloscope
Adjustment Page	F
Adjustment Address	49
Specified Value	A = 286±5mV (NTSC) A = 300±5mV (PAL)

Note 1: Insert the plug into the S video terminal (Hi8 model)

Adjusting method:

1) Select page: 0, address: 01, and set data: 01.
2) Select page: 3, address: 01, set data: 41, and press the PAUSE button of the adjusting remote commander.
3) Select page: 2, address: 61, and set data: 30.
4) Select page: F, address: 49, change the data and set the SYNC level (A) to the specified value.
5) Press the PAUSE button of the adjusting remote commander.
6) Select page: 2, address: 61, and set data: 10.
7) Select page: 3, address: 01, set data: 00, and press the PAUSE button of the adjusting remote commander.
8) Select page: 0, address: 01, and set data: 00.

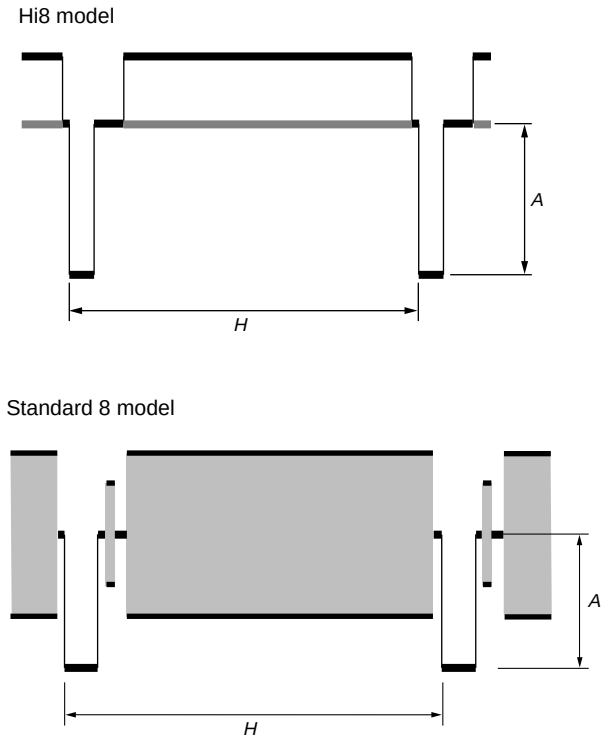

Fig. 5-3-9.

5. C OUT Level Adjustment (VC-195 board)

Set the chroma signal output level.

Mode	VTR stop
Signal	No signal
Measurement Point	Hi8 model : Chroma signal terminal of S VIDEO terminal (75Ω terminated) Standard 8 model : VIDEO terminal (75Ω terminated)
Measuring Instrument	Oscilloscope
Adjustment Page	F
Adjustment Address	4B
Specified Value	A = 286±5mV (NTSC) A = 300±5mV (PAL)

Note 1: Insert the plug into the S video terminal (Hi8 model)

Adjusting method:

1) Select page: 0, address: 01, and set data: 01.
2) Select page: 3, address: 01, set data: 41, and press the PAUSE button of the adjusting remote commander.
3) Select page: 2, address: 61, and set data: 30.
4) Select page: F, address: 4B, change the data and set the burst level (A) to the specified value.
5) Press the PAUSE button of the adjusting remote commander.
6) Select page: 2, address: 61, and set data: 10.
7) Select page: 3, address: 01, set data: 00, and press the PAUSE button of the adjusting remote commander.
8) Select page: 0, address: 01, and set data: 00.

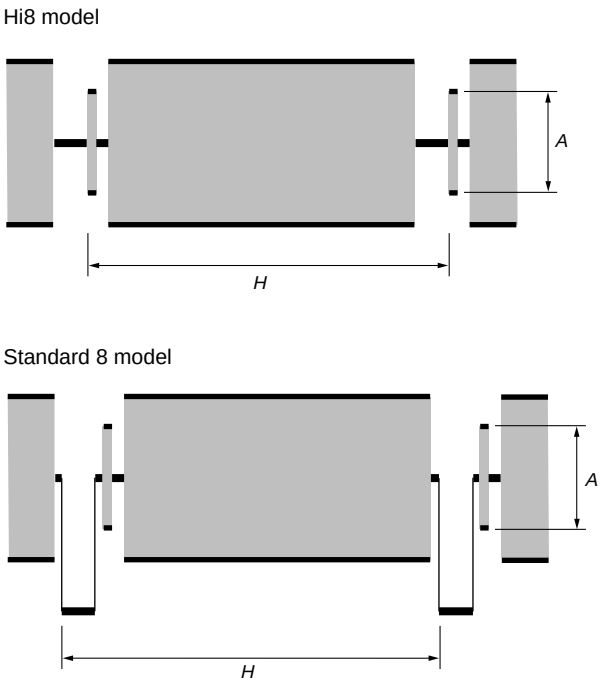

Fig. 5-3-10.

6. RP Filter f0 Adjustment (VC-195 board)

Adjust the LPF of the playback RF amplifier.

Mode	VTR stop
Signal	No signal
Measurement Point	Pin ⑨ of CN910 (RF AGC OUT)
Measuring Instrument	Oscilloscope
Adjustment Page	F
Adjustment Address	4E
Specified Value	A = Below 10mVp-p

Connection:

1) Input a 14.2MHz, 400mVp-p CW signal to Pin ⑦ of CN910 (RF AGC IN).

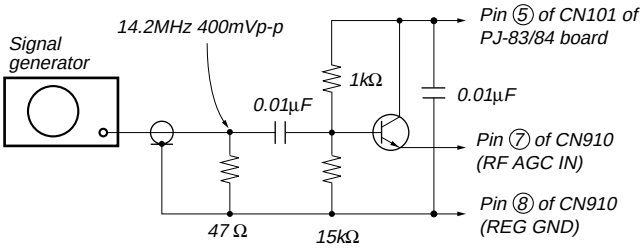

Transistor : General NPN transistor (2SC403. etc)
47 Ω resistor : 1-249-401-11
1k Ω resistor : 1-249-417-11
15k Ω resistor : 1-249-431-11
0.01µF capacitor : 1-101-004-00

Fig. 5-3-11.

Adjusting method:

1) Select page: 0, address: 01, and set data: 01.
2) Select page: 3, address: 01, set data: 35, and press the PAUSE button of the adjusting remote commander.
3) Only for Standard8 model, select page: D, address: 15, after memorizing the data , set the bit value of bit0 to "1". (Refer to "3. Bit value discrimination" of "3-1-8. Service mode").
4) Select page: F, address: 4E, change the data and minimize the 14.2 MHz signal level (A).
5) Press the PAUSE button of the adjusting remote commander.
6) Select page: D, address: 15, and set the data memorized at step 3), and press the PAUSE button of the adjusting remote commander..
7) Select page: 3, address: 01, set data: 00, and press the PAUSE button of the adjusting remote commander.
8) Select page: 0, address: 01, and set data: 00.

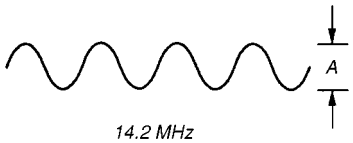

Fig. 5-3-12.

7. Hi8 REC Y Current Adjustment (VC-195 board) (CCD-TRV85/ TRV93/ TRV615/ TRV815)

Adjust the Y FM signal recording current.

Mode	VTR recording (SP mode)
Signal	No signal
Measurement Point	Pin ⑩ of CN910 (REC RF)
Measuring Instrument	Oscilloscope (20 MHz BW LIMIT: OFF)
Adjustment Page	F
Adjustment Address	53 to 5A
Specified Value	A = 160±5mV (NTSC)

Adjusting method:

1) Insert a tape, set to recording mode.
2) Select page: 0, address: 01, and set data: 01.
3) Select page: F, address: 5C, after note down the data , set data: FF, and press the PAUSE button of the adjusting remote commander.
4) Select page: F, address: 65, after note down the data , set data: 00, and press the PAUSE button of the adjusting remote commander.
5) Select page: 3, address: 01, set data: 41, and press the PAUSE button of the adjusting remote commander.
6) Select page: F, address: 54, change the data and set the Y signal level (A) to the specified value.
7) Press the PAUSE button of the adjusting remote commander.
8) Select page: F, address: 54, and read the data (D_{54}).
9) Calculate the adjustment data (hexadecimal) from the following equations (hexadecimal calculation), and input each adjustment address. (Refer to Table 5-1-2. Hexadecimal-Decimal conversion Table.)

   Address: 53 $D_{53} = D_{54}$
   Address: 55 $D_{55} = D_{54} + 10$
   Address: 56 $D_{56} = D_{54} + 10$

Note: After setting each data, be sure to press the PAUSE button of the adjusting remote commander.

10) Write the following data in page: F, address: 57 to 5A.

Address	Data
57	A0
58	80
59	90
5A	80

Note: After setting each data, be sure to press the PAUSE button of the adjusting remote commander.

11) Select page: F, address: 5C, set the data noted down at step 3), press the PAUSE button of the adjusting remote commander.
12) Select page: F, address: 65, set the data noted down at step 4), press the PAUSE button of the adjusting remote commander.
13) Select page: 3, address: 01, set data: 00, and press the PAUSE button of the adjusting remote commander.
14) Select page: 0, address: 01, and set data: 00.

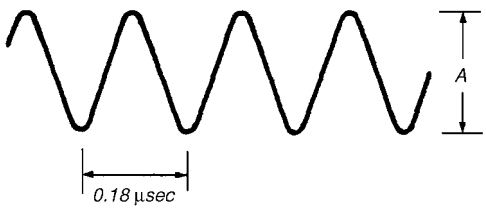

Fig. 5-3-13.

8. Standard8 REC Y Current Adjustment (VC-195 board) (CCD-TRV15/ TRV15E/ TRV15EP/ TRV15PK/ TRV25/ TRV25PK/ TRV35/ TRV35E/ TRV215)

Adjust the Y FM signal recording current.

Mode	VTR recording (SP mode)
Signal	No signal
Measurement Point	Pin ⑩ of CN910 (REC RF)
Measuring Instrument	Oscilloscope (20 MHz BW LIMIT: OFF)
Adjustment Page	F
Adjustment Address	53 to 5A
Specified Value	A = 170±5mV (NTSC) A = 185±5mV (PAL)

Note 1: NTSC MODEL: CCD-TRV15/ TRV15PK/ TRV25/ TRV25PK/ TRV35/ TRV215
PAL MODEL: CCD-TRV15E/ TRV15EP/ TRV35E

Preparations only for the model without REC switch:

1) Select page: 0, address: 01, and set data: 01.
3) Select page: D, address: 14, after memorizing the data, set the bit value of bit1 to "1". (Refer to "3. Bit value discrimination" of "3-1-8. Service mode").
4) Select page: D, address: 15, after memorizing the data , set the bit value of bit7 to "0".
5) Turn off the HOLD switch of the adjusting remote commander, and press the REC buttons and set to recording mode.

Adjusting method:

1) Insert a tape, set to recording mode.
2) Select page: 0, address: 01, and set data: 01.
3) Select page: F, address: 5C, after note down the data , set data: FF, and press the PAUSE button of the adjusting remote commander.
4) Select page: F, address: 65, after note down the data , set data: 00, and press the PAUSE button of the adjusting remote commander.
5) Select page: 3, address: 01, set data: 41, and press the PAUSE button of the adjusting remote commander.
6) Select page: F, address: 54, change the data and set the Y signal level (A) to the specified value.
7) Press the PAUSE button of the adjusting remote commander.
8) Select page: F, address: 54, and read the data (D_{54}).
9) Calculate the adjustment data (hexadecimal) from the following equations (hexadecimal calculation), and input each adjustment address. (Refer to Table 5-1-2. Hexadecimal-Decimal conversion Table.)

   Address: 53 $D_{53} = D_{54}$
   Address: 55 $D_{55} = D_{54}$
   Address: 56 $D_{56} = D_{54}$

Note: After setting each data, be sure to press the PAUSE button of the adjusting remote commander.

10) Write the following data in page: F, address: 57 to 5A.

Address	Data	
	NTSC	PAL
57	80	80
58	80	80
59	80	80
5A	80	80

Note: After setting each data, be sure to press the PAUSE button of the adjusting remote commander.

11) Select page: F, address: 5C, set the data noted down at step 3), press the PAUSE button of the adjusting remote commander.
12) Select page: F, address: 65, set the data noted down at step 4), press the PAUSE button of the adjusting remote commander.
13) Select page: 3, address: 01, set data: 00, and press the PAUSE button of the adjusting remote commander.
14) Select page: 0, address: 01, and set data: 00.

Processing after completed adjustment: only for the model without REC switch:

1) Select page: 0, address: 01, and set data: 01.
2) Select page: D, address: 14, and set the data memorized at step 3) of "Preparations only for the model without REC switch".
3) Press the PAUSE button of the adjusting remote commander.
4) Select page: D, address: 15, and set the data memorized at step 4) of "Preparations only for the model without REC switch".
5) Press the PAUSE button of the adjusting remote commander.
6) Select page: 0, address: 01, and set data: 00.

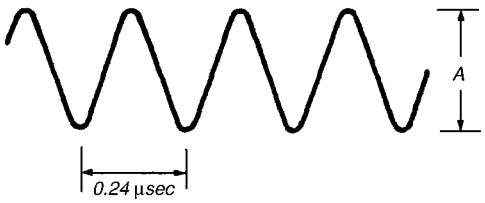

Fig. 5-3-14.

9. Hi8 REC L Level Adjustment (VC-195 board) (CCD-TRV65/TRV65PK/TRV85/ TRV93/ TRV615/ TRV815)

Set the recording levels of the REC AFM signal and REC ATF signal. If the level is too low, the audio S/N will deteriorated, tracking will not be stable, or SP/LP will not be discriminated properly. If too high, color beets will be produced on the self-recording/playback image.

Mode	VTR recording (SP mode)
Signal	No signal
Measurement Point	Pin ⑩ of CN910 (REC RF)
Measuring Instrument	Oscilloscope (20MHz BW LIMIT: OFF)
Adjustment Page	F
Adjustment Address	5B to 64
Specified Value	A = 10.1±0.6mV (NTSC)

Note 1: Do not insert a plug into the AUDIO (R) terminal.

Connection:
1) Remove C085 (0.01µF, Pin ⑯ of IC202).

Note: After completing "REC L Level Adjustment" and "REC C Current Adjustment", replace C085 with new parts (1-162-970-11 CERAMIC CHIP 0.01µF 10% 25V).

Adjusting method:
1) Insert Hi8 ME tape, set to recording mode.
2) Select page: 0, address: 01, and set data: 01.
3) Select page: F, address: 5B, set data: FF, and press the PAUSE button of the adjusting remote commander.
4) Select page: F, address: 65, set data: 00, and press the PAUSE button of the adjusting remote commander.
5) Select page: F, address: 5C, change the data and set the REC AFM signal level (A) to the specified value.
6) Press the PAUSE button of the adjusting remote commander.
7) Select page: F, address: 5C, read the data (D_{5C}).
8) Calculate the adjustment data (hexadecimal) from the following equations (hexadecimal calculation), and input each adjustment address. (Refer to Table 5-1-2. Hexadecimal-Decimal conversion Table.)

Address: 5B	$D_{5B} = D_{5C}$
Address: 5D	$D_{5D} = D_{5C} - 0C$
Address: 5E	$D_{5E} = D_{5C} - 0C$
Address: 5F	$D_{5F} = D_{5C} + 12$
Address: 60	$D_{60} = D_{5C} + 12$
Address: 61	$D_{61} = D_{5C} + 13$
Address: 62	$D_{62} = D_{5C} + 13$

Note: After setting each data, be sure to press the PAUSE button of the adjusting remote commander.

9) Write the following data in page: F, address: 63 to 64.

Address	Data
63	7C
64	78

Note: After setting each data, be sure to press the PAUSE button of the adjusting remote commander.

10) Select page: 0, address: 01, and set data: 00.
11) Perform "REC C Current Adjustment".

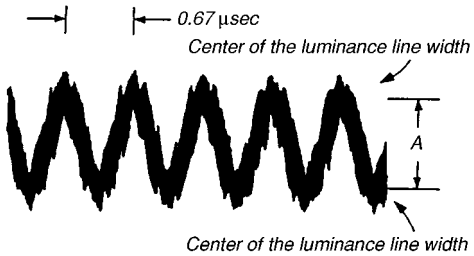

Fig. 5-3-15.

10. Standard8 REC L Level Adjustment (VC-195 board) (CCD-TRV15/ TRV15E/ TRV15EP/ TRV15PK/ TRV25/ TRV25PK/ TRV35/ TRV35E/ TRV215)

Set the recording levels of the REC AFM signal and REC ATF signal. If the level is too low, the audio S/N will deteriorated, tracking will not be stable, or SP/LP will not be discriminated properly. If too high, color beets will be produced on the self-recording/playback image.

Mode	VTR recording (SP mode)
Signal	No signal
Measurement Point	Pin ⑩ of CN910 (REC RF)
Measuring Instrument	Oscilloscope (20MHz BW LIMIT: OFF)
Adjustment Page	F
Adjustment Address	5B to 64
Specified Value	A = 9.6±0.6mV (NTSC) A = 9.3±0.5mV (PAL)

Note 1: NTSC MODEL: CCD-TRV15/ TRV15PK/ TRV25/ TRV25PK/ TRV35/ TRV215
PAL MODEL: CCD-TRV15E/ TRV15EP/ TRV35E

Note 2: Do not insert a plug into the AUDIO (R) terminal.

Connection:

1) Remove C085 (0.01µF, Pin ⑯ of IC202).

Note: After completing "REC L Level Adjustment" and "REC C Current Adjustment", replace C085 with new parts (1-162-970-11 CERAMIC CHIP 0.01µF 10% 25V).

Preparations only for the model without REC switch:

1) Select page: 0, address: 01, and set data: 01.
3) Select page: D, address: 14, after memorizing the data, set the bit value of bit1 to "1". (Refer to "3. Bit value discrimination" of "3-1-8. Service mode").
4) Select page: D, address: 15, after memorizing the data , set the bit value of bit7 to "0".
5) Turn off the HOLD switch of the adjusting remote commander, and press the REC buttons and set to recording mode.

Adjusting method:

1) Insert Srandrd8 MP tape, set to recording mode.
2) Select page: 0, address: 01, and set data: 01.
3) Select page: F, address: 5B, set data: FF, and press the PAUSE button of the adjusting remote commander.
4) Select page: F, address: 65, set data: 00, and press the PAUSE button of the adjusting remote commander.
5) Select page: F, address: 5C, change the data and set the REC AFM signal level (A) to the specified value.
6) Press the PAUSE button of the adjusting remote commander.
7) Select page: F, address: 5C, read the data (D_{5C}).
8) Calculate the adjustment data (hexadecimal) from the following equations (hexadecimal calculation), and input each adjustment address. (Refer to Table 5-1-2. Hexadecimal-Decimal conversion Table.)

   Address: 5B $D_{5B} = D_{5C}$
   Address: 5D $D_{5D} = D_{5C}$
   Address: 5E $D_{5E} = D_{5C}$
   Address: 5F $D_{5F} = D_{5C}$
   Address: 60 $D_{60} = D_{5C}$
   Address: 61 $D_{61} = D_{5C}$
   Address: 62 $D_{62} = D_{5C}$

Note: After setting each data, be sure to press the PAUSE button of the adjusting remote commander.

9) Write the following data in page: F, address: 63 to 64.

Address	Data	
	NTSC	PAL
63	80	80
64	80	80

Note: After setting each data, be sure to press the PAUSE button of the adjusting remote commander.

10) Select page: 0, address: 01, and set data: 00.
11) Perform "REC C Current Adjustment".

Processing after completed adjustment: only for the model without REC switch:

1) Select page: 0, address: 01, and set data: 01.
2) Select page: D, address: 14, and set the data memorized at step 3) of "Preparations only for the model without REC switch".
3) Press the PAUSE button of the adjusting remote commander.
4) Select page: D, address: 15, and set the data memorized at step 4) of "Preparations only for the model without REC switch".
5) Press the PAUSE button of the adjusting remote commander.
6) Select page: 0, address: 01, and set data: 00.

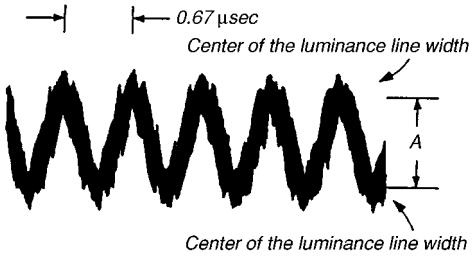

Fig. 5-3-16.

11. REC C Current Adjustment (VC-195 board)

Set the recording current levels of the REC Chroma signal. If it is too low, chroma signal noise in played back picture will increased. If too high, Y signal noises will increase and white modulation noises will be produced.

Mode	VTR recording (SP mode)
Signal	No signal
Measurement Point	Pin ⑩ of CN910 (REC RF)
Measuring Instrument	Oscilloscope
Adjustment Page	F
Adjustment Address	65
Specified Value	Hi8 model : A = 34.6±1.2mV (NTSC) Standard8 model : A = 30.9±1.1mV (NTSC) A = 30.0±1.1mV (PAL)

Note 1: NTSC HI8 model: CCD-TRV65/ TRV65PK/ TRV85/ TRV93/ TRV615/ TRV815
NTSC Standard8 model: CCD-TRV15/ TRV15PK/ TRV25/ TRV25PK/ TRV35/ TRV215
PAL Standard8 model: CCD-TRV15E/ TRV15EP/ TRV35E

Connection:
1) Remove C085 (0.01µF, Pin ⑯ of IC202).

Note: After completing "REC L Level Adjustment" and "REC C Current Adjustment", replace C085 with new parts (1-162-970-11 CERAMIC CHIP 0.01µF 10% 25V).

2) Connect Pin ① of IC001 and GND with a 0.01F capacitor.
0.01µF capacitor: 1-101-004-00

Preparations only for the model without REC switch:
1) Select page: 0, address: 01, and set data: 01.
2) Select page: D, address: 14, after memorizing the data, set the bit value of bit1 to "1". (Refer to "3. Bit value discrimination" of "3-1-8. Service mode").
3) Select page: D, address: 15, after memorizing the data , set the bit value of bit7 to "0".
4) Turn off the HOLD switch of the adjusting remote commander, and press the REC buttons and set to recording mode.

Adjusting method:
1) Insert a tape, set to recording mode.
2) Select page: 0, address: 01, and set data: 01.
3) Select page: 3, address: 01, set data: 41, and press the PAUSE button of the adjusting remote commander.
4) Select page: 2, address: 61, and set data: 30.
5) Select page: F, address: 65, change the data and set the REC chroma signal level (A) to the specified value.
6) Press the PAUSE button of the adjusting remote commander.
7) Select page: 2, address: 61, and set data: 10.
8) Select page: 3, address: 01, set data: 00, and press the PAUSE button of the adjusting remote commander.
9) Select page: 0, address: 01, and set data: 00.

Processing after completed adjustment: only for the model without REC switch:
1) Select page: 0, address: 01, and set data: 01.
2) Select page: D, address: 14, and set the data memorized at step 3) of "Preparations only for the model without REC switch".
3) Press the PAUSE button of the adjusting remote commander.
4) Select page: D, address: 15, and set the data memorized at step 4) of "Preparations only for the model without REC switch".
5) Press the PAUSE button of the adjusting remote commander.
6) Select page: 0, address: 01, and set data: 00.

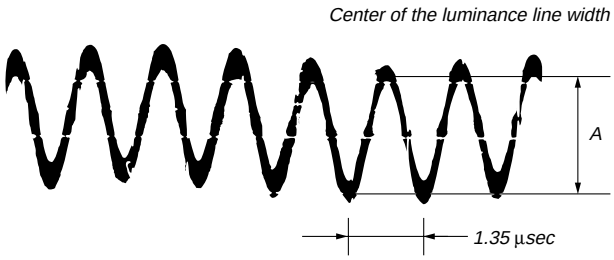

Fig. 5-3-17.

3-5. IR TRANSMITTER ADJUSTMENTS (CCD-TRV35/ TRV65/ TRV65PK/ TRV85/ TRV93/ TRV615/ TRV815)

Adjust using a IR receiver jig (J-6082-383-A).

Switch setting:
LASER LINK ..... (Red LED is lit)

1. IR Video Carrier Frequency Adjustment (VC-195 board)

Mode	Camera standby
Subject	Arbitrary
Measurement Point	Pin ⑤ of CN003 of IR receiver jig (RF) (Or Pin ⑯ of IC751 of VC-195 board)
Measuring Instrument	Frequency counter
Adjustment Page	F
Adjustment Address	68
Specified Value	f = 11.85±0.05MHz

Connection of Equipment
Connect the measuring device as shown in the following figure, and adjust.

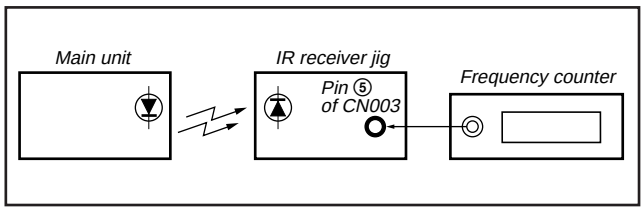

Fig. 5-3-18.

Adjusting method:
1) Select page: 0, address: 01, and set data: 01.
2) Select page: 3, address: 01, set data: 37, and press the PAUSE button of the adjusting remote commander.
3) Select page: F, address: 68, change the data, and set the video carrier frequency (f) to the specified value.
4) Press the PAUSE button of the adjusting remote commander.
5) Select page: 3, address: 01, set data: 00, and press the PAUSE button of the adjusting remote commander.
6) Select page: 0, address: 01, and set data: 00.

2. IR Video Deviation Adjustment (VC-195 board)

Mode	Camera standby
Subject	Arbitrary
Measurement Point	VIDEO OUT terminal of IR receiver jig (Terminated at 75Ω)
Measuring Instrument	Oscilloscope
Adjustment Page	F
Adjustment Address	66
Specified Value	A = 0.87±0.04V

Connection of Equipment
Connect the measuring device as shown in the following figure, and adjust.

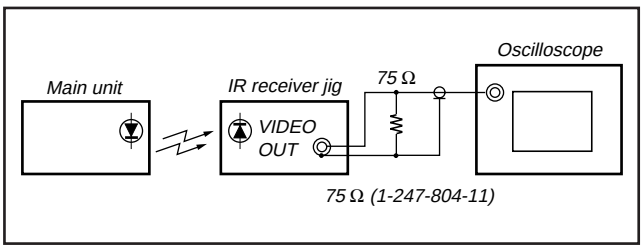

Fig. 5-3-19.

Adjusting method:
1) Select page: 0, address: 01, and set data: 01.
2) Select page: 3, address: 01, set data: 39, and press the PAUSE button of the adjusting remote commander.
3) Select page: F, address: 66, and change the data, set the video signal amplitude (A) to the specified value.
4) Press the PAUSE button of the adjusting remote commander.
5) Select page: 3, address: 01, set data: 00, and press the PAUSE button of the adjusting remote commander.
6) Select page: 0, address: 01, and set data: 00.

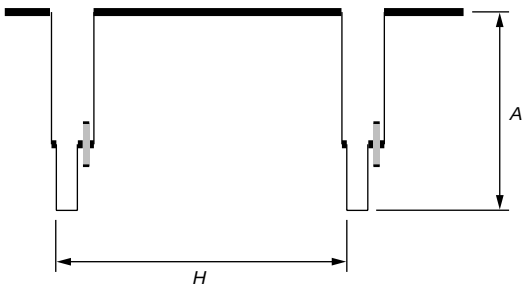

Fig. 5-3-20.

3. IR Audio Deviation Adjustment (VC-195 board)

Mode	VTR recording
Signal	Audio signal : 400Hz, –7.5dBs : L or R of AUDIO terminal Video signal : Color bar signal : VIDEO terminal
Measurement Point	AUDIO L terminal and AUDIO R terminal of IR receiver jig (Terminated at 47kΩ)
Measuring Instrument	Audio level meter
Adjustment Page	F
Adjustment Address	67
Specified Value	Signal level: –7.5±2.0dBs

Connection of Equipment
Connect the measuring device as shown in the following figure, and adjust.

Preparations only for the model without REC switch:
1) Select page: 0, address: 01, and set data: 01.
2) Select page: D, address: 14, after memorizing the data, set the bit value of bit1 to "1". (Refer to "3. Bit value discrimination" of "3-1-8. Service mode").
3) Select page: D, address: 15, after memorizing the data , set the bit value of bit7 to "0".
4) Turn off the HOLD switch of the adjusting remote commander, and press the REC buttons and set to recording mode.

Adjusting method:
1) Select page: 0, address: 01, and set data: 01.
2) Connect the audio level meter to the AUDIO L terminal of the IR receiver jig.
3) Select page: F, address: 67, change the data and set the 400Hz audio signal level to the specified value.
4) Press the PAUSE button of the adjusting remote commander.
5) Connect the audio level meter to the AUDIO R terminal of the IR receiver jig.
6) Check that the 400Hz audio signal level is within the specified value. If outside, repeat from step 2).
7) Select page: 0, address: 01, and set data: 00.

Processing after completed adjustment: only for the model without REC switch:
1) Select page: 0, address: 01, and set data: 01.
2) Select page: D, address: 14, and set the data memorized at step 3) of "Preparations only for the model without REC switch".
3) Press the PAUSE button of the adjusting remote commander.
4) Select page: D, address: 15, and set the data memorized at step 4) of "Preparations only for the model without REC switch".
5) Press the PAUSE button of the adjusting remote commander.
6) Select page: 0, address: 01, and set data: 00.

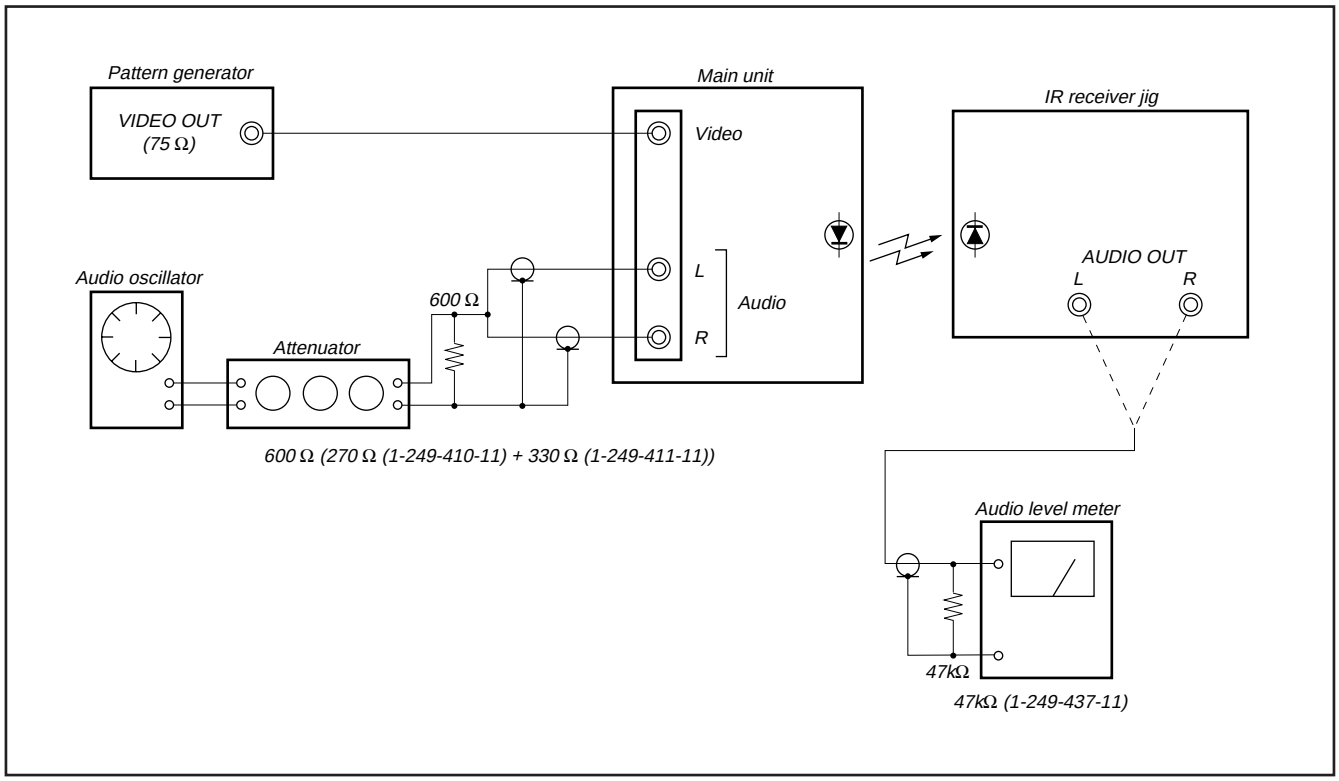

Fig. 5-3-21.

3-6. STEREO AUDIO SYSTEM ADJUSTMENT (CCD-TRV65/ TRV65PK/ TRV85/ TRV93/ TRV615/ TRV815)

- Perform the adjustment using the color bar signal as a video signal input for VIDEO terminal.
- The items to be adjusted for the R channel will be indicated within the [ ], in regard to the adjusting items to be adjusted for both L and R channels.
- Set the Hi-Fi sound switch in the menu display to “STEREO” position unless specified otherwise.

Note:

1) When inputting the audio signal, input the same signal to both the L and R channels, unless specified otherwise.
2) Be sure to insert the plug (Shorting plug or dummy plug, etc) into the AUDIO terminal (Right). If the plug is not inserted, the monaural mode well be set, and correct adjustments can not be carried out.
   [Monaural mode]
   During recording ..... REC AFM RF 1.7MHz carriear will not be output.
   During playback ..... The L+R signal will be output from the AUDIO terminal (Left).

[Connecting the measuring instruments for the audio]

Connect the audio system measuring instruments in addition to the video system measuring instruments as shown in Fig. 5-3-22, and perform adjustments at the power switch [VTR] or [PLAYER] position.

[Adjustment Procedure]

1) 1.5 MHz deviation adjustment
2) 1.7 MHz deviation adjustment
3) BPF adjustment

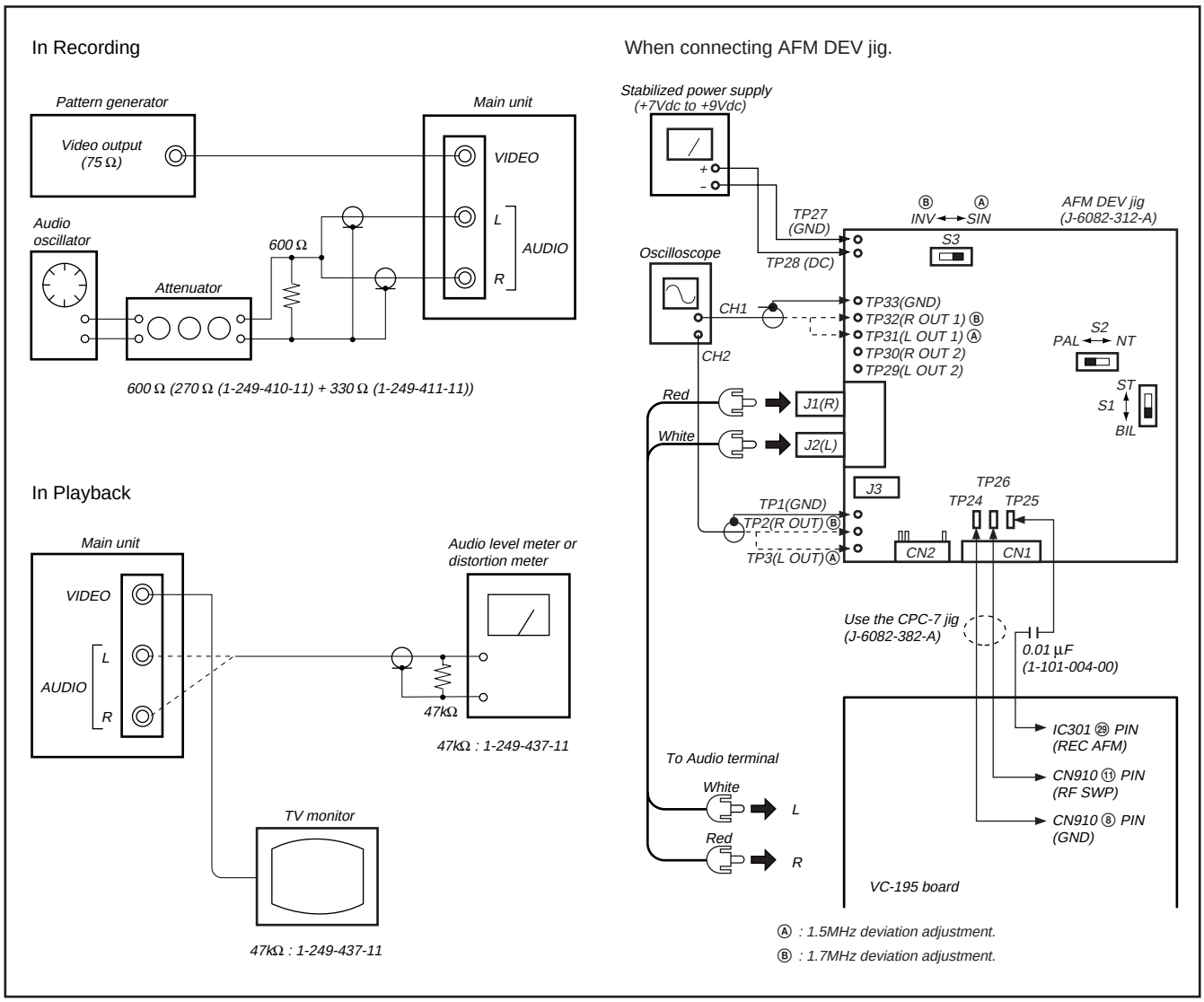

Fig. 5-3-22.

1. 1.5 MHz Deviation Adjustment (VC-195 board)

Sets the spectrum of the L-ch ((L+R)/2 signal) level modulated during recording. If deviated, the crosstalk signal of the audio signal will occur and the audio level will drop during both playback and recording.

Mode	VTR recording
Signal	Input the AFM DEV jig output signal to the left and right audio input terminal
Measurement Point	CH1: AFM DEV jig TP31 CH2: AFM DEV jig TP3
Measuring Instrument	Oscilloscope ADD mode CH2 INV mode
Adjustment Page	F
Adjustment Address	45
Specified Value	The level difference between CH1 signal and CH2 signal should be minimum.

Connection:

1) Connect TP24 and TP26 of the AFM DEV jig to CN910 of the VC-195 board.
   TP24(GND) ..... Pin ⑧ of CN910
   TP26(RF SWP) ..... Pin ⑪ of CN910
2) Connect TP25 (REC AFM) of the AFM DEV jig to Pin ㉙ of IC301 with a 0.01µF capacitor (1-101-004-00).
3) Connect the audio output terminal (J1 and J2) of the AFM DEV jig to AUDIO terminal of the unit.
4) Connect TP28 (DC), TP27 (GND) of the AFM DEV jig to the DC power supply (+7Vdc to +9Vdc).
5) Set the AFM DEV jig switches to the following positions.
   S1 ..... BIL Position
   S2 ..... NT Position
   S3 ..... SIN Position

Adjusting method :

1) Match the vertical ranges of CH1 and CH2 of the oscilloscope to each other.
2) Set the oscilloscope to the ADD mode and CH2 to the INV (invert) mode.
3) Select page: 0, address: 01, and set data: 01.
4) Select page: F, address: 45, change the data and minimize the audio signal level difference (A).
5) Press the PAUSE button of the adjusting remote commander.
6) Select page: 0, address: 01, and set data: 00.

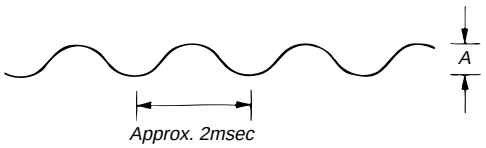

Fig. 5-3-23.

2. 1.7 MHz Deviation Adjustment (VC-195 board)

Sets the spectrum of the R-ch ((L-R)/2 signal) level modulated during recording. If deviated, the crosstalk signal of the audio signal will occur and the audio level will drop during both playback and recording.

Mode	VTR recording
Signal	Input the AFM DEV jig output signal to the left and right audio input terminal
Measurement Point	CH1: AFM DEV jig TP32 CH2: AFM DEV jig TP2
Measuring Instrument	Oscilloscope ADD mode CH2 normal mode
Adjustment Page	F
Adjustment Address	46
Specified Value	The level difference between CH1 signal and CH2 signal should be minimum.

Connection:

1) Connect TP24 and TP26 of the AFM DEV jig to CN910 of the VC-195 board.
   TP24 (GND) ..... Pin ⑧ of CN910
   TP26 (RF SWP) ..... Pin ⑪ of CN910
2) Connect TP25 (REC AFM) of the AFM DEV jig to Pin ㉙ of IC301 with a 0.01µF capacitor (1-101-004-00).
3) Connect the audio output terminal (J1 and J2) of the AFM DEV jig to AUDIO terminal of the unit.
4) Connect TP28 (DC), TP27 (GND) of the AFM DEV jig to the DC power supply (+7Vdc to +9Vdc).
5) Set the AFM DEV jig switches to the following positions.
   S1 ..... BIL Position
   S2 ..... NT Position
   S3 ..... INV Position

Adjusting method :

1) Match the vertical ranges of CH1 and CH2 of the oscilloscope to each other.
2) Set the oscilloscope to the ADD mode and CH2 to the normal mode.
3) Select page: 0, address: 01, and set data: 01.
4) Select page: F, address: 46, change the data and minimize the audio signal level difference (A).
5) Press the PAUSE button of the adjusting remote commander.
6) Select page: 0, address: 01, and set data: 00.

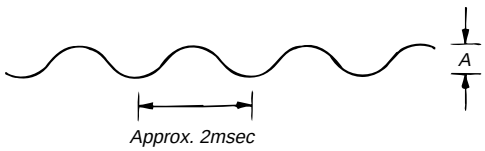

Fig. 5-3-24.

3. BPF f0 Adjustment (VC-195 board)

Sets the BPF passing frequency so that the AFM signal can separate from the playback RF signal properly. If deviated. the mono/stereo mode will be differentiated incorrectly, and noises and distortions will increase during high volume playback.

Mode	Playback
Signal	Alignment tape: For BPF adjustment (WR5-11NS)
Measurement Point	Audio output terminal left or right
Measuring Instrument	distortion meter
Adjustment Page	F
Adjustment Address	47
Specified Value	The Main and Sub channel distortion rate should be almost the same (within±1%) and minimum.

Adjusting method :

1) Select page: 0, address: 01, and set data: 01.
2) Set the Hi-Fi sound switch (menu display) to “2”.
3) Select page: F, address: 47, change the data and minimize the distortion rate.
4) Press the PAUSE button of the adjusting remote commander.
5) Set the Hi-Fi sound switch (menu display) to “1”.
6) Select page: F, address: 47, change the data and minimize the distortion rate.
7) Press the PAUSE button of the adjusting remote commander.
8) Repeat steps 2) to 7) and set the data of address: 47 so that the distortions rates when the Hi-Fi sound switch is set to “2” and set to “1” respectively are almost the same and minimum.
9) Press the PAUSE button of the adjusting remote commander.
11) Select page: 0, address: 01, and set data: 00.
12) Set the Hi-Fi sound switch to “STEREO”.

3-7. MONAURAL AUDIO SYSTEM ADJUSTMENT MONAURAL (CCD-TRV15/ TRV15E/ TRV15EP/ TRV15PK/ TRV25/ TRV25PK/ TRV35/ TRV35E/ TRV215)

[Connecting the measuring instruments for the audio]
Connect the audio system measuring instruments besides the video system measuring instruments as shown Fig. 5-3-25.

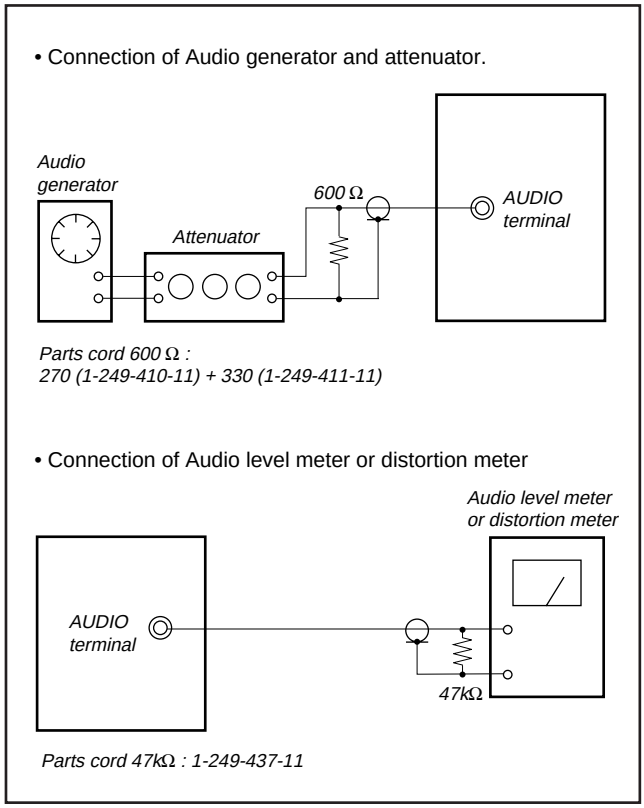

Fig. 5-3-25.

1. 1.5 MHz Deviation Adjustment (VC-195 board)

Adjust to the optimum audio FM signal distortion.
If the adjustment is not correct, its playback level will differ from that of other units.

Mode	Playback
Signal	Alignment tape: For checking the operation (WR5-5NSP (NTSC)) (WR5-5CSP (PAL))
Measurement Point	Audio output terminal
Measuring Instrument	Audio level meter
Adjustment Page	F
Adjustment Address	45
Specified Value	–7.5±0.5dBs

Note 1: NTSC model: CCD-TRV15/ TRV15PK/ TRV25/ TRV25PK/ TRV35/ TRV215
PAL model: CCD-TRV15E/ TRV15EP/ TRV35E

Adjusting method :
1) Select page: 0, address: 01, and set data: 01.
2) Select page: F, address: 45, change the data and set the 400Hz signal level to the specified value.
3) Press the PAUSE button of the adjusting remote commander.
4) Select page: 0, address: 01, and set data: 00.

2. BPF Adjustment (VC-195 board)

Adjust to the optimum audio BPF characteristics of the IC.
If the adjustment is not correct, the distortion rate and S/N ratio will worsen.

Mode	Playback
Signal	Alignment tape: For BPF adjustment (WR5-11NS (NTSC)) (WR5-11CS (PAL))
Measurement Point	Audio output terminal
Measuring Instrument	distortion meter
Adjustment Page	F
Adjustment Address	47
Specified Value	The distortion rate should be and minimum.

Adjusting method :
1) Select page: 0, address: 01, and set data: 01.
2) Select page: F, address: 47, change the data and minimize the distortion rate.
3) Press the PAUSE button of the adjusting remote commander.
4) Select page: 0, address: 01, and set data: 00.

3-8. ARRANGEMENT DIAGRAM FOR ADJUSTMENT PARTS

VC-195 BOARD (SIDE A)

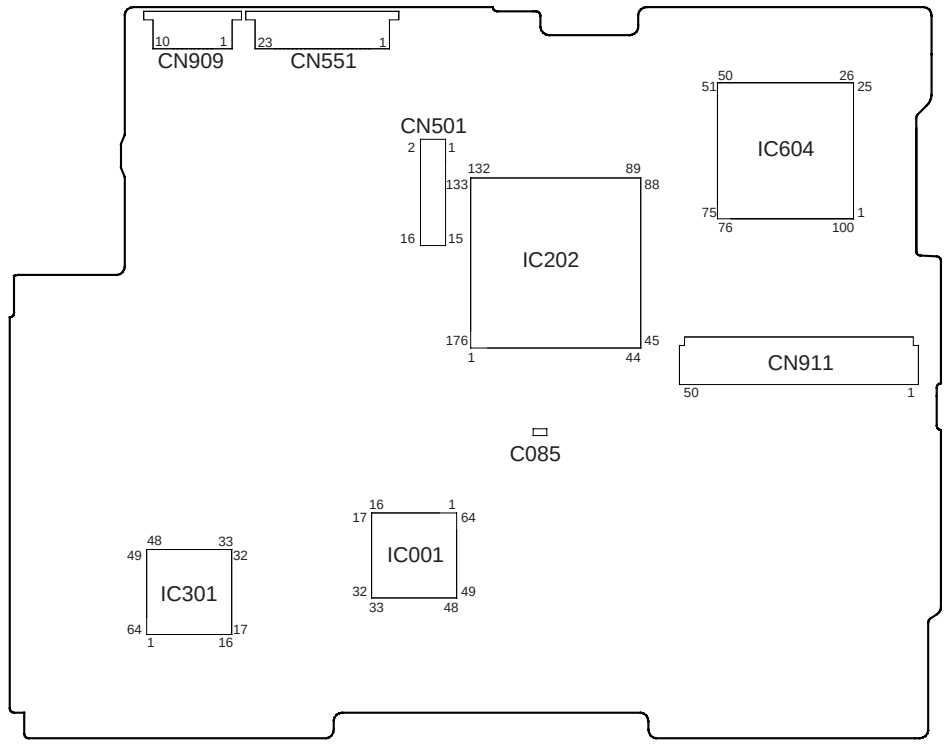

VC-195 BOARD (SIDE B)

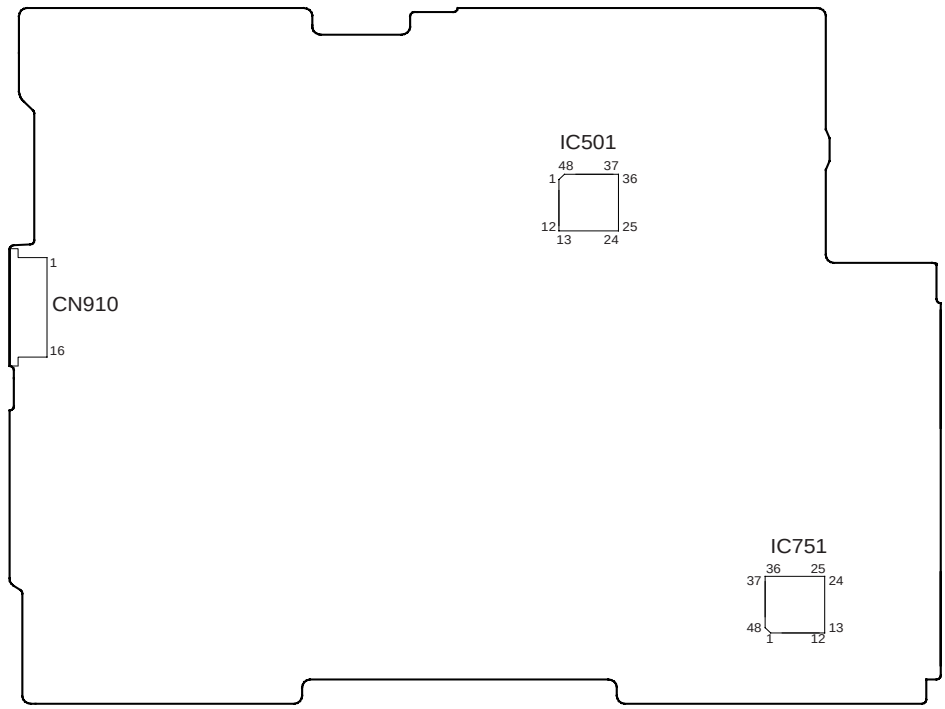

SECTION 6
REPAIR PARTS LIST

6-1. EXPLODED VIEWS

NOTE:

- Items marked "*" are not stocked since they are seldom required for routine service. Some delay should be anticipated when ordering these items.
- The mechanical parts with no reference number in the exploded views are not supplied.
- Abbreviation
  Canadian model is abbreviated as CND.
  Chinese model is abbreviated as CN.
  Brazilian model is abbreviated as BR.
  East European model is abbreviated as EE.
  Hong Kong model is abbreviated as HK.
  North European model is abbreviated as NE.
  Russian model is abbreviated as RU.

The components identified by mark ⚠ or dotted line with mark ⚠ are critical for safety.
Replace only with part number specified.

Les composants identifiés par une marque ⚠ sont critiques pour la sécurité.
Ne les remplacer que par une piéce portant le numéro spécifié.

6-1-1. CABINET (L) BLOCK ASSEMBLY

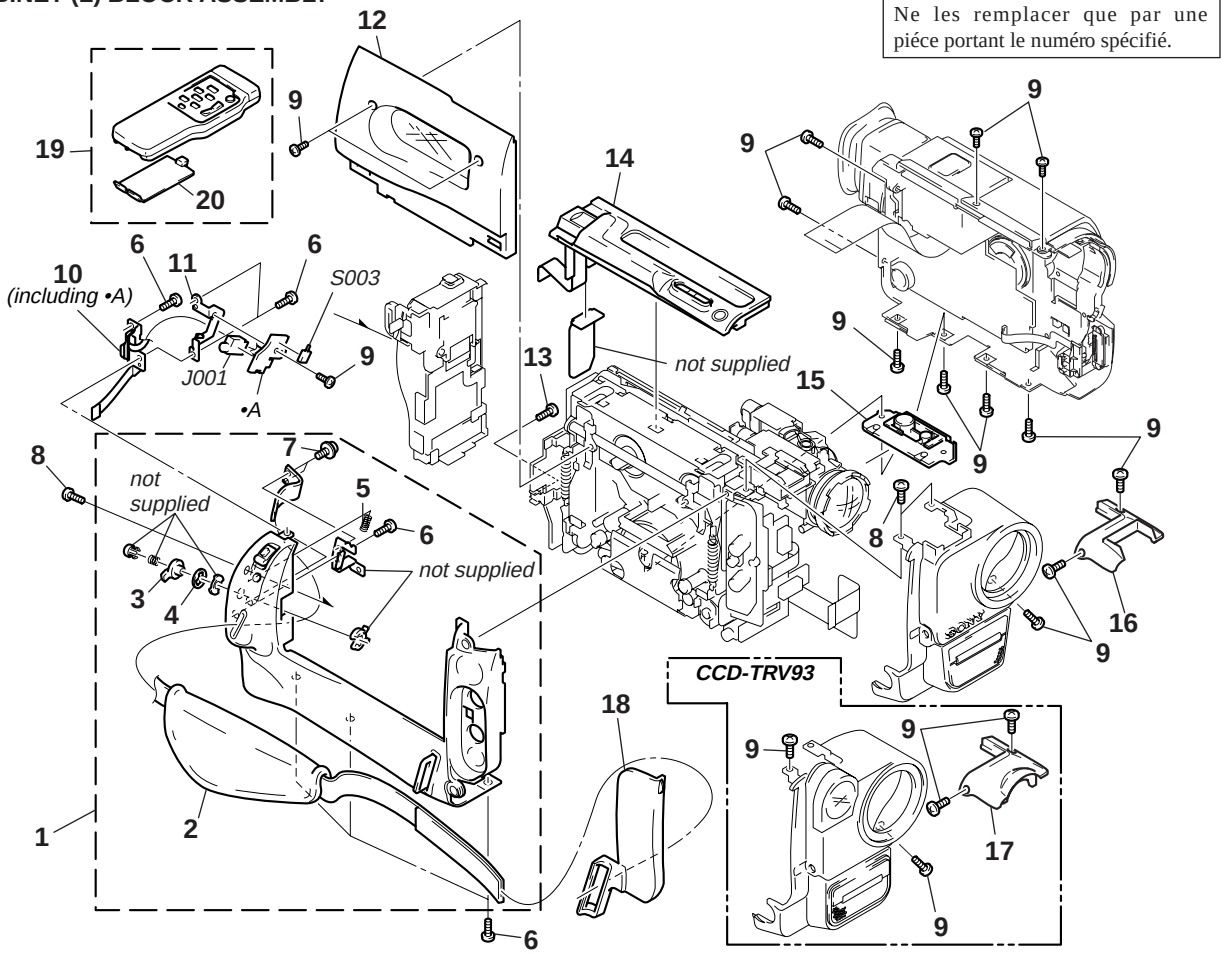

Ref. No.	Part No.	Description	Remark
1	X-3948-205-1	CABINET (L) ASSY (TRV65/TRV65PK/TRV615)	
1	X-3948-207-1	CABINET (L) ASSY (EXCEPT TRV65/TRV65PK/TRV85/TRV93/TRV615/TRV815)	
1	X-3948-315-1	CABINET (L) ASSY (TRV85/TRV815/TRV93)	
2	3-969-339-31	BELT, GRIP	
3	3-969-081-01	KNOB, STAND-BY	
4	3-970-854-01	SPRING, STAND-BY	
5	3-302-492-00	SPRING, COMPRESSION	
6	3-948-339-61	TAPPING	
7	3-679-362-11	SCREW	
8	3-962-826-01	SCREW (2X4)	
9	3-968-729-01	SCREW (M2), LOCK ACE, P2	
10	1-475-619-11	SWITCH BLOCK, CONTROL(SS-8500)	
* 11	3-975-532-01	HOLDER, EL	
12	X-3947-199-1	LID ASSY, CASSETTE (TRV85/TRV815/TRV93)	
12	X-3948-219-1	LID ASSY, CASSETTE (TRV65/TRV65PK/TRV615)	
12	X-3948-221-1	LID ASSY, CASSETTE (TRV15:US,CND/TRV25/TRV215)	
12	X-3948-223-1	LID ASSY, CASSETTE (TRV15:E,HK,BR/TRV15PK/TRV25PK/TRV35:E,HK/TRV15E/TRV35E)	

Ref. No.	Part No.	Description	Remark
13	3-713-786-21	SCREW (M2X3)	
14	1-475-617-11	SWITCH BLOCK, CONTROL(FK-8500) (TRV15/TRV15PK/TRV15E/TRV15EP/TRV25/TRV25PK/TRV215)	
14	1-475-617-31	SWITCH BLOCK, CONTROL (FK-8500)(TRV35E)	
14	1-475-617-51	SWITCH BLOCK, CONTROL(FK-8500)(TRV35)	
14	1-475-617-71	SWITCH BLOCK, CONTROL(FK-8500) (TRV65/TRV65PK/TRV615)	
14	1-475-618-41	SWITCH BLOCK, CONTROL(FK-8500) (TRV85/TRV815/TRV93)	
15	3-987-717-01	SCREW, TRIPOD	
16	3-987-639-11	CABINET (S) (878)(TRV85/TRV815)	
16	3-987-639-01	CABINET (S (870)) (TRV35/TRV65/TRV65PK/TRV615/TRV35E)	
17	3-987-645-01	CABINET (N) (TRV15/TRV15PK/TRV15E/TRV15EP/TRV25/TRV25PK/TRV215)	
17	3-987-652-11	CABINET (LT)(TRV93)	
18	3-975-522-01	COVER, JACK	
19	1-467-574-21	REMOTE COMMANDER (RMT-708)	
20	3-958-131-01	LID, BATTERY CASE (for RMT-708)	
J001	1-565-276-31	JACK, ULTRA SMALL 1P (LANC)	
S003	1-572-688-11	SWITCH, PUSH (1 KEY) (EJECT)	

6-1-2. FRONT PANEL BLOCK ASSEMBLY (TRV93)

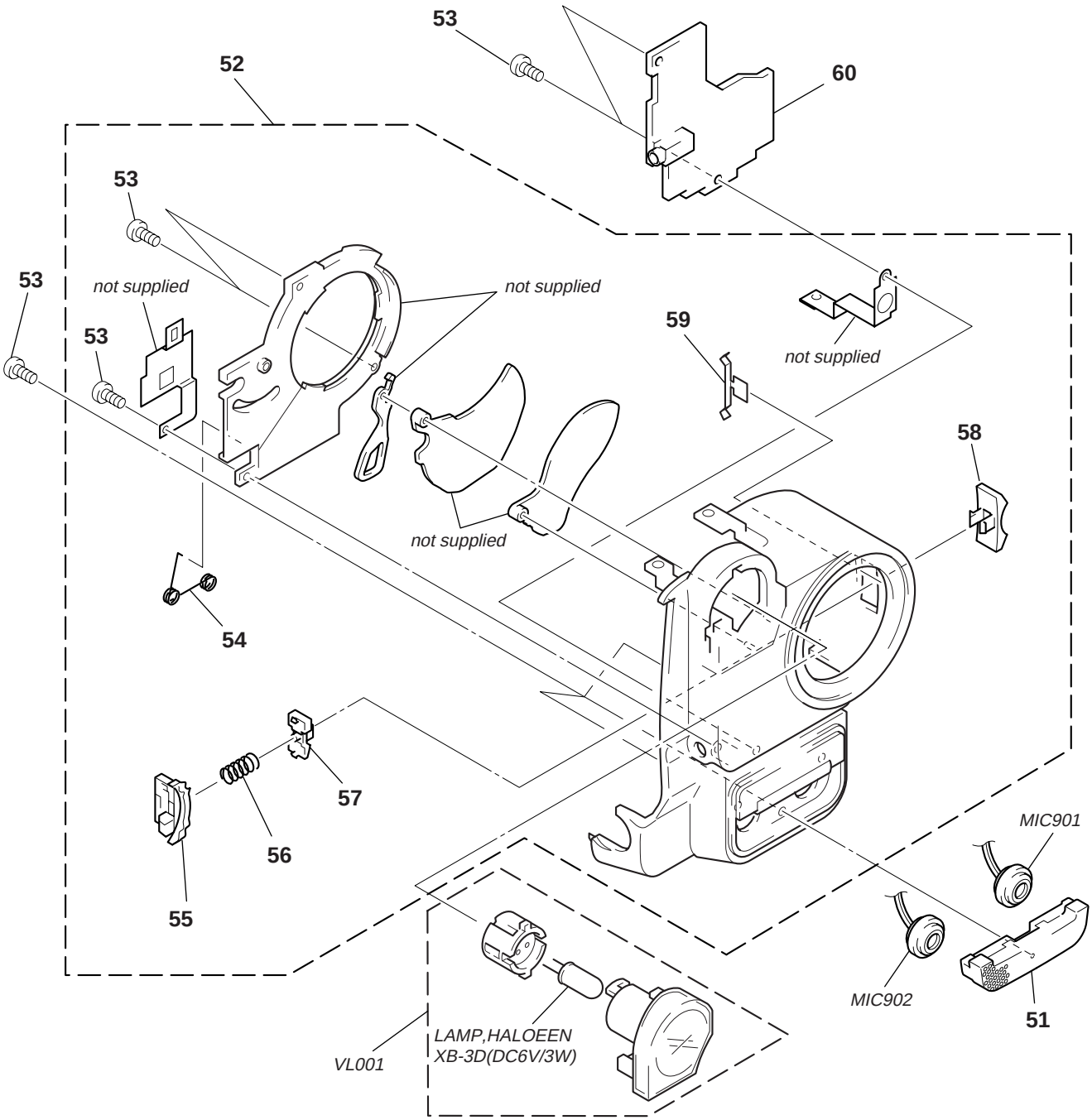

The components identified by mark ⚠ or dotted line with mark ⚠ are critical for safety. Replace only with part number specified.	Les composants identifiés par une marque ⚠ sont critiques pour la sécurité. Ne les remplacer que par une piéce portant le numéro spécifié.

Ref. No.	Part No.	Description	Remark
51	X-3948-170-1	GRILLE (870) ASSY, MICROPHONE	
52	X-3948-276-1	PANEL (887) ASSY, FRONT	
53	3-948-339-61	TAPPING	
54	3-987-882-01	SPRING, TORSION	
55	3-987-632-01	HOLDER, P KNOB	
56	3-973-619-01	SPRING, COMPRESSION	
57	3-987-633-01	BUTTON, LOCK	
58	3-987-631-01	KNOB, P	
59	3-987-642-01	SPRING, CLICK	
60	A-7073-455-A	MA-312(VHIB) BOARD, COMPLETE	
MIC901	1-542-312-11	MICROPHONE (L-CH)	
MIC902	1-542-312-11	MICROPHONE (R-CH)	
⚠VL001	1-517-760-11	LIGHT BLOCK, VIDEO	

6-1-3. FRONT PANEL BLOCK ASSEMBLY (EXCEPT TRV93)

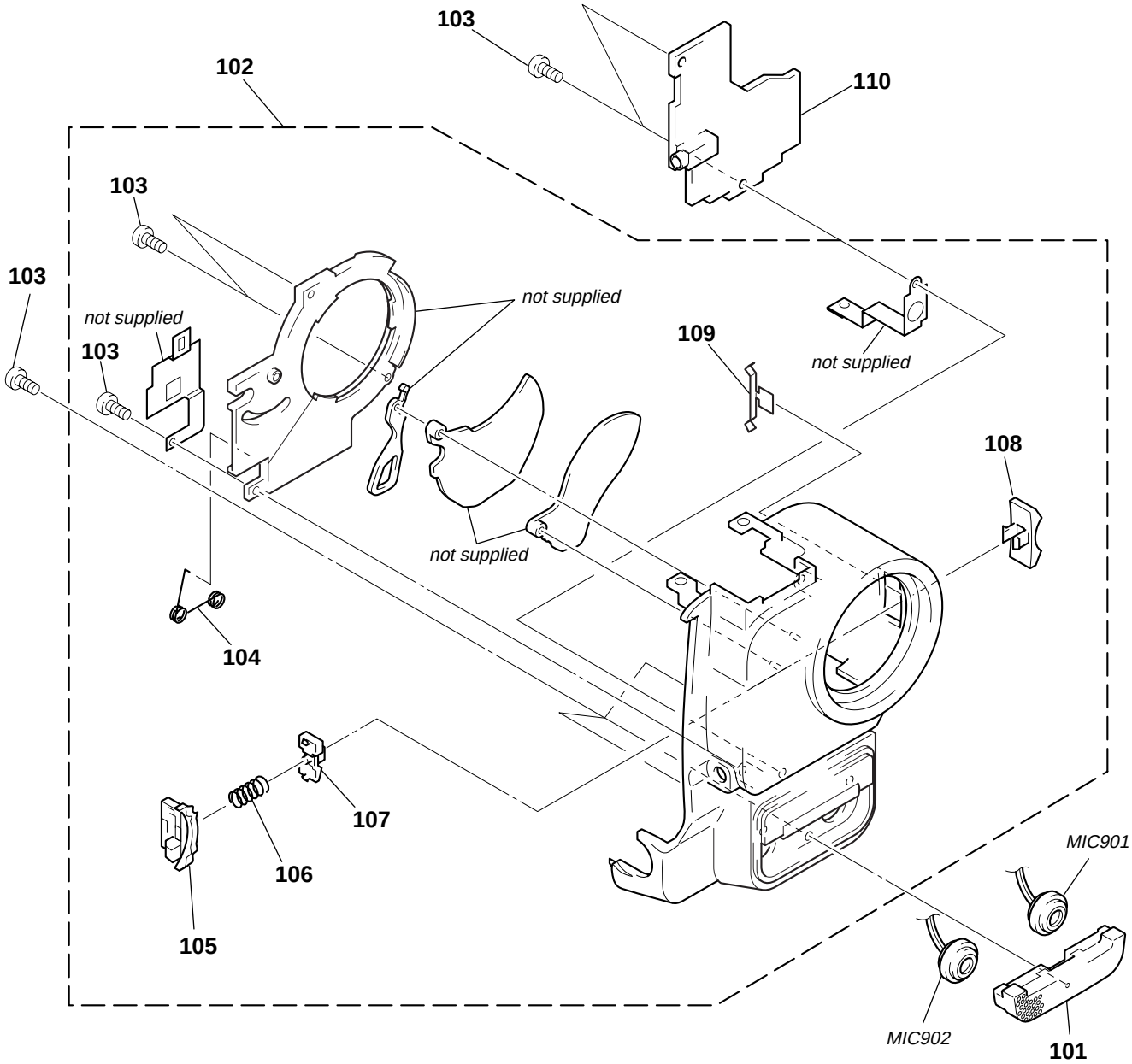

Ref. No.	Part No.	Description	Remark
101	X-3948-170-1	GRILLE (870) ASSY, MICROPHONE	
102	X-3948-194-1	PANEL (870) ASSY, FRONT (TRV15/TRV15PK/TRV15E/TRV15EP)	
102	X-3948-196-1	PANEL (870) ASSY, FRONT (TRV35)	
102	X-3948-197-1	PANEL (870) ASSY, FRONT (TRV35E)	
102	X-3948-274-1	PANEL (870) ASSY, FRONT (TRV65/TRV65PK/TRV615)	
102	X-3948-479-1	PANEL (870) ASSY, FRONT (TRV25/TRV25PK/TRV215)	
102	X-3948-275-1	PANEL (887) ASSY, FRONT (TRV85/TRV815)	
103	3-948-339-61	TAPPING	
104	3-987-882-01	SPRING, TORSION	
105	3-987-632-01	HOLDER, P KNOB	
106	3-973-619-01	SPRING, COMPRESSION	
107	3-987-633-01	BUTTON, LOCK	
108	3-987-631-01	KNOB, P	
109	3-987-642-01	SPRING, CLICK	
110	A-7073-402-A	MA-331(VMM) BOARD, COMPLETE (TRV15/TRV15PK/TRV15E/TRV15EP/TRV25/TRV25PK/TRV215)	
110	A-7073-411-A	MA-331(VHI) BOARD, COMPLETE (TRV65/TRV65PK/TRV615)	
110	A-7073-430-A	MA-312(VHI) BOARD, COMPLETE (TRV85/TRV815)	
110	A-7073-445-A	MA-311(VMMI) BOARD, COMPLETE(TRV35)	
110	A-7073-451-A	MA-331(VMM0) BOARD, COMPLETE (TRV35E)	
MIC901	1-542-312-11	MICROPHONE (L-CH)	
MIC902	1-542-312-11	MICROPHONE (R-CH) (TRV65/TRV65PK/TRV85/TRV615/TRV815)	

6-1-4. CABINET (R) BLOCK ASSEMBLY (TRV85/TRV815/TRV93)

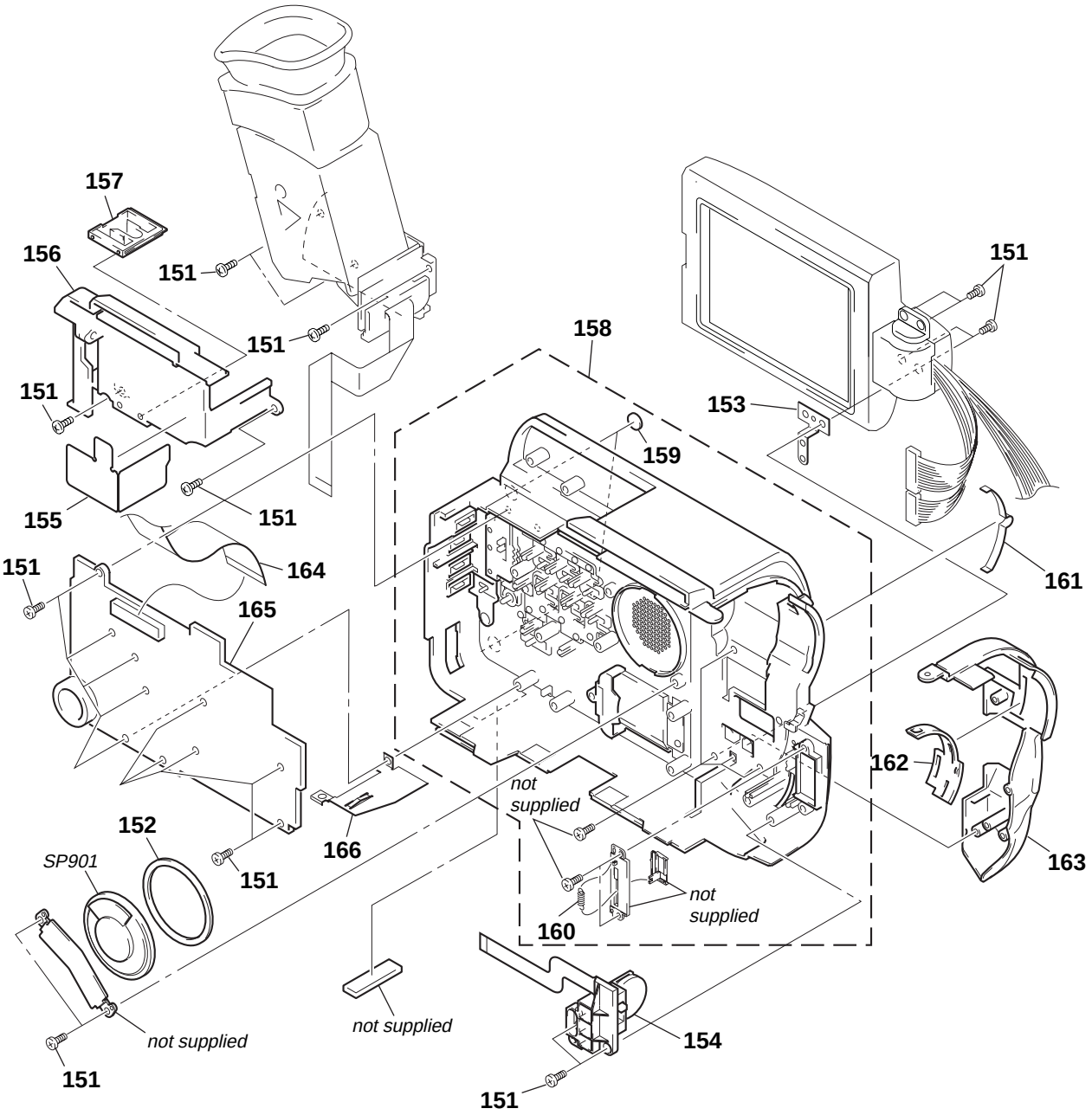

Ref. No.	Part No.	Description	Remark
151	3-948-339-61	TAPPING	
152	3-965-367-01	SPACER, SP	
153	3-987-769-01	PLATE, HINGE GROUND	
154	1-475-621-11	SWITCH BLOCK, CONTROL(MR-8500)	
* 155	3-987-842-01	SHEET, VF FLEXIBLE RETAINE	
156	3-987-792-01	BASE (887), VF	
157	3-987-783-01	LOCK, TILT	
158	X-3948-267-1	CABINET (R) (887) ASSY	
159	3-959-978-02	CUSHION, PANEL	
160	3-989-121-01	SPRING, TENSION	

Ref. No.	Part No.	Description	Remark
161	3-987-739-01	SPRING, LINK PLATE	
162	3-987-744-01	KNOB, IR	
163	3-987-764-01	COVER, IR	
164	1-783-240-11	CABLE, FLEXIBLE FLAT (FFC-236)	
165	A-7073-431-A	CF-51(VH) BOARD, COMPLETE (TRV85/TRV815)	
165	A-7073-456-A	CF-51(VHC) BOARD, COMPLETE (TRV93)	
166	3-987-770-01	PLATE (887), GROUND	
SP901	1-504-753-21	SPEAKER (2.8CM)	

6-1-5. CABINET (R) BLOCK ASSEMBLY (EXCEPT TRV85/TRV815/TRV93)

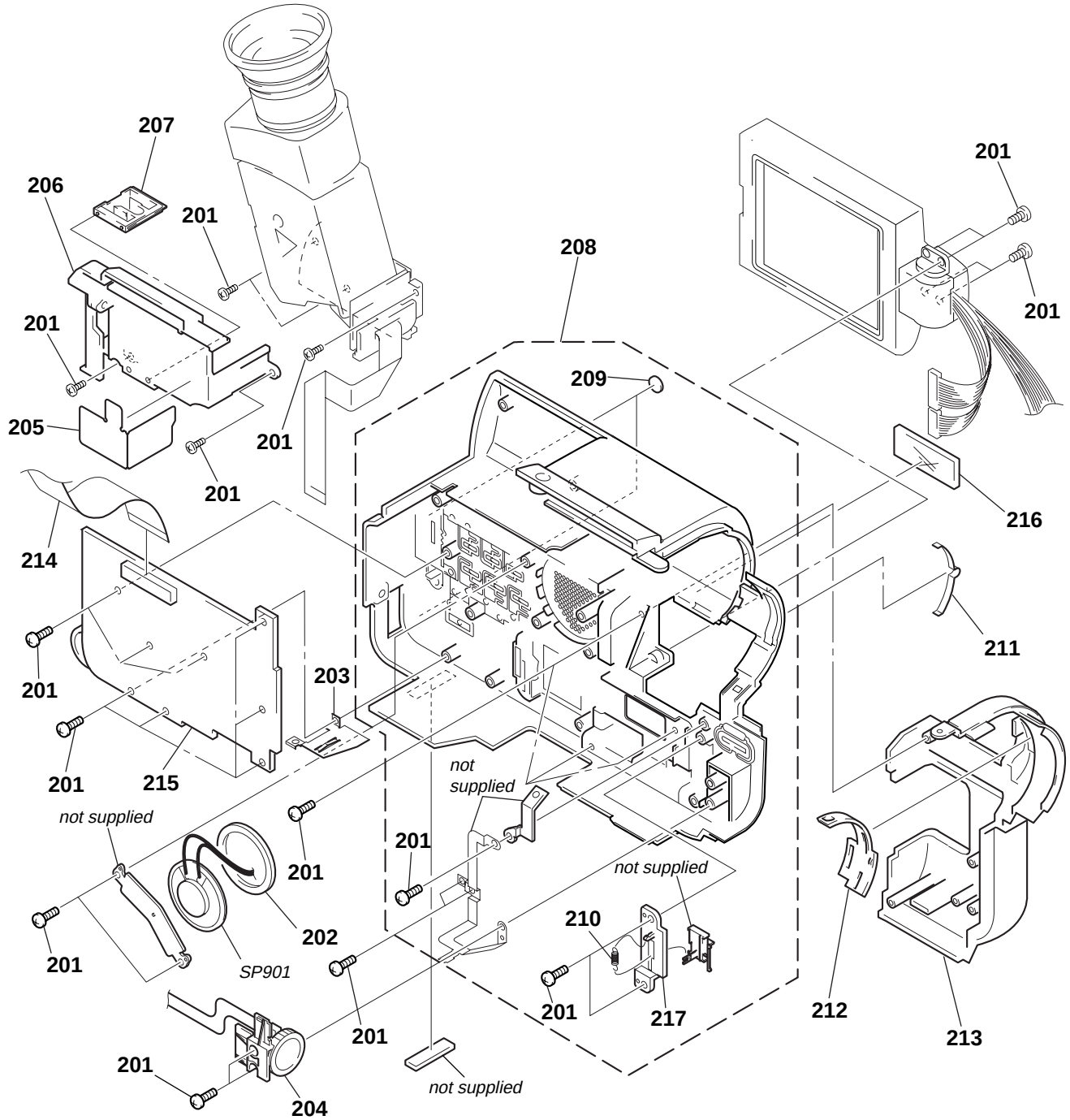

Ref. No.	Part No.	Description	Remark
201	3-948-339-61	TAPPING	
202	3-965-367-01	SPACER, SP	
203	3-987-742-01	PLATE(878), GROUND	
204	1-475-620-11	SWITCH BLOCK, CONTROL(MF-8500)	
* 205	3-987-842-01	SHEET, VF FLEXIBLE RETAINER	
206	X-3948-603-1	BASE , VF ASSY	
207	3-987-783-01	LOCK, TILT	
208	X-3948-239-1	CABINET (R) (878) ASSY (TRV65/TRV65PK/TRV615)	
208	X-3948-240-1	CABINET (R) (846U) ASSY (TRV15:US,CND/TRV25/TRV215/TRV15E:AEP,UK)	
208	X-3948-241-1	CABINET (R) (872) ASSY(TRV35E:AEP,UK)	
208	X-3948-242-1	CABINET (R) (871) ASSY (TRV35:E,HK/TRV35E:EE,NE,RU,E,HK,AUS,CN)	
208	X-3948-246-1	CABINET (R) (846E) ASSY (TRV15:E,HK,BR/TRV15PK/TRV25PK/TRV15E:EE,NE,RU)	
209	3-959-978-21	CUSHION, PANEL (EXCEPT TRV35E/TRV65PK)	
210	3-987-742-01	SPRING, TENSION (TRV65/TRV65PK/TRV615/TRV35E:AEP,UK)	
211	3-987-739-01	SPRING, LINK PLATE (TRV35/TRV65/TRV65PK/TRV615/TRV35E)	

Ref. No.	Part No.	Description	Remark
212	3-987-744-01	KNOB, IR (TRV35/TRV65/TRV65PK/TRV615/TRV35E)	
213	3-987-730-01	COVER, IR(TRV65/TRV65PK)	
213	3-987-730-11	COVER, IR (TRV15/TRV15PK/TRV15E/TRV15EP/TRV25/TRV25PK/TRV215)	
213	3-987-730-21	COVER, IR(TRV35/TRV35E)	
213	3-987-730-31	COVER, IR (TRV615)	
214	1-783-240-11	CABLE, FLEXIBLE FLAT (FFC-236)	
215	A-7073-403-A	CF-50(E7V) BOARD, COMPLETE (TRV15/TRV15PK/TRV15E/TRV15EP/TRV25/TRV25PK/TRV215)	
215	A-7073-412-A	CF-50(ESV) BOARD, COMPLETE (TRV35/TRV35E/TRV65/TRV65PK/TRV615)	
216	3-987-729-01	PLATE, ORNAMENTAL (TRV65/TRV65PK)	
216	3-987-729-11	PLATE, ORNAMENTAL (TRV15/TRV15PK/TRV15E/TRV15EP)	
216	3-987-729-21	PLATE, ORNAMENTAL (TRV25/TRV25PK/TRV35/TRV35E)	
216	3-987-729-41	PLATE, ORNAMENTAL (TRV615)	
216	3-987-729-51	PLATE, ORNAMENTAL (TRV215)	
217	3-987-736-01	LID,MK (TRV15/TRV15PK/TRV15E/TRV25/TRV25PK/TRV215)	
SP901	1-505-291-11	SPEAKER (DIA 2.8CM)	

6-1-6. LCD BLOCK ASSEMBLY(3/3.5INCH) (TRV85/TRV815/TRV93)

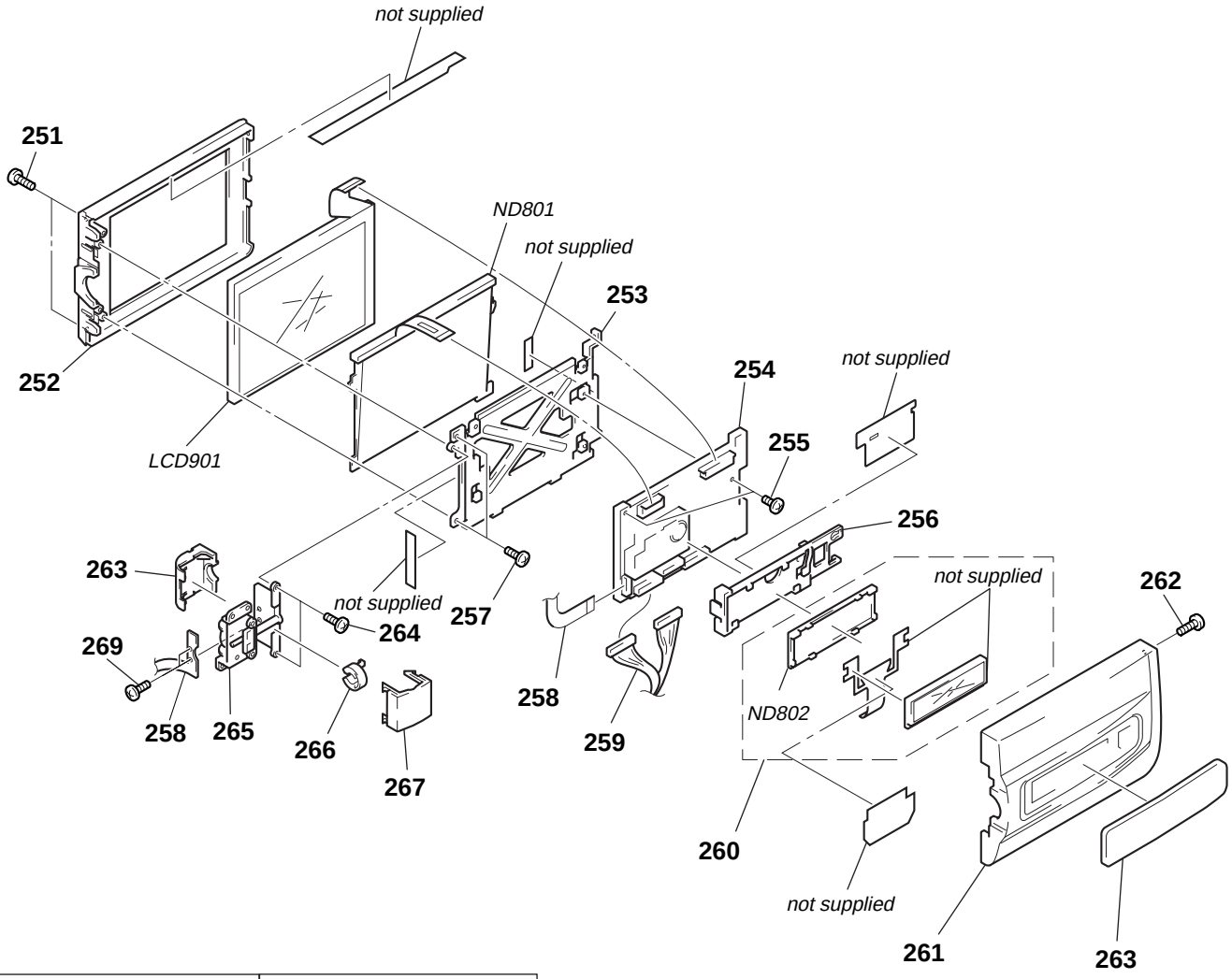

The components identified by mark ⚠ or dotted line with mark ⚠ are critical for safety. Replace only with part number specified.	Les composants identifiés par une marque ⚠ sont critiques pour la sécurité. Ne les remplacer que par une piéce portant le numéro spécifié.

Ref. No.	Part No.	Description	Remark
251	3-948-339-11	SCREW, TAPPING	
252	3-987-593-01	CABINET (M) (885), P (TRV85/TRV815)	
252	3-987-593-11	CABINET (M) (885), P (TRV93)	
253	3-987-594-01	FRAME (885), PANEL	
254	A-7073-432-A	PD-93(CN3.5) BOARD, COMPLETE (TRV85/TRV815)	
254	A-7073-457-A	PD-93(SN3) BOARD, COMPLETE (TRV93)	
255	3-713-786-21	SCREW (M2X3)	
256	3-987-597-01	HOLDER (885), LCD	
257	3-948-339-61	TAPPING	
258	1-668-963-41	FP-642 FLEXIBLE BOARD	
259	1-958-332-11	HARNESS (DP-71)	
260	A-7093-486-A	INDICATION LCD BLOCK ASSY	
261	X-3948-165-1	CABINET (C) (885) H ASSY, P	
262	3-962-826-01	SCREW (2X4)	
263	3-987-601-01	WINDOW (885), LCD (TRV85)	

Ref. No.	Part No.	Description	Remark
263	3-987-601-11	WINDOW (885), LCD (TRV93)	
263	3-987-601-51	WINDOW (885), LCD (TRV815)	
264	3-948-339-01	SCREW, TAPPING	
265	X-3948-169-1	HINGE ASSY	
266	3-987-623-01	CLAMP, HARNESS	
267	3-987-626-01	COVER (C) (885), HINGE	
268	3-987-625-11	COVER (M), HINGE	
269	4-981-286-01	SCREW(M1.7x2), IB LOCK	
LCD901	1-803-032-21	INDICATOR MODULE, LIQUID CRYST (TRV85/TRV815)	
LCD901	1-803-037-21	INDICATOR MODULE, LIQUID CRYST (TRV93)	
⚠ND801	1-517-753-11	TUBE, FLUORESCENT,COLD CATHODE (TRV93)	
⚠ND801	1-517-754-11	TUBE, FLUORESCENT,COLD CATHODE (TRV85/TRV815)	
⚠ND802	1-517-759-11	LIGHT, BACK	

6-1-7. LCD BLOCK ASSEMBLY (2.5INCH)(EXCEPT TRV85/TRV815/TRV93)

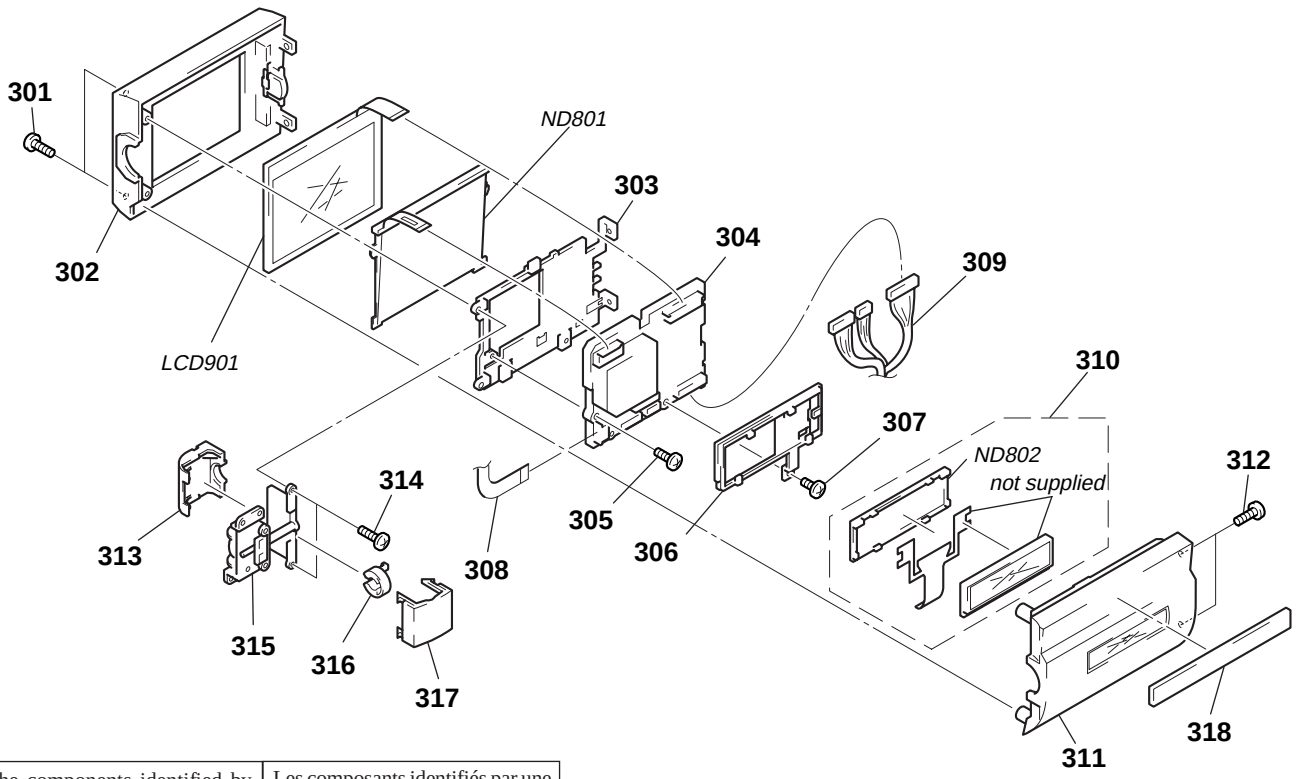

The components identified by mark ⚠ or dotted line with mark ⚠ are critical for safety. Replace only with part number specified.	Les composants identifiés par une marque ⚠ sont critiques pour la sécurité. Ne les remplacer que par une piéce portant le numéro spécifié.

Ref. No.	Part No.	Description	Remark
301	3-948-339-11	SCREW, TAPPING	
302	X-3948-162-1	CABINET (M) (870) ASSY, P	
303	3-987-582-01	FRAME (870), PANEL	
304	A-7073-413-A	PD-92(SN6) BOARD, COMPLETE (TRV35/TRV65/TRV65PK/TRV615)	
304	A-7073-415-A	PD-92(CN6) BOARD, COMPLETE (TRV15/TRV15PK/TRV25/TRV25PK/TRV215)	
304	A-7073-452-A	PD-92(SP6) BOARD, COMPLETE (TRV35E)	
304	A-7073-460-A	PD-92(CP6) BOARD, COMPLETE (TRV15E/TRV15EP)	
305	3-713-786-21	SCREW (M2X3)	
306	3-987-584-01	HOLDER (870), LCD	
307	3-948-339-61	TAPPING	
308	1-668-963-41	FP-642 FLEXIBLE BOARD	
309	1-958-379-11	HARNESS (DP-70)	
310	A-7093-473-A	INDICATION LCD BLOCK ASSY (TRV15/TRV15PK/TRV15E/TRV15EP/TRV25/TRV25PK/TRV215)	
310	A-7093-509-A	INDICATION LCD BLOCK ASSY (TRV35/TRV35E)	
310	A-7093-486-A	INDICATION LCD BLOCK ASSY (TRV65/TRV65PK/TRV615)	
311	X-3948-158-1	CABINET (C) (870) ASSY, P (TRV65/TRV65PK)	
311	X-3948-159-1	CABINET (C) (846) ASSY, P (TRV15/TRV15PK/TRV15E/TRV15EP/TRV25/TRV25PK/TRV215)	
311	X-3948-160-1	CABINET (C) (872) ASSY, P (TRV35/TRV35E)	
311	X-3948-161-1	CABINET (C) (878D) ASSY, P (TRV615)	
312	3-962-826-01	SCREW (2X4)	
313	3-987-625-01	COVER (M), HINGE	
314	3-948-339-01	SCREW, TAPPING	
315	X-3948-169-1	HINGE ASSY	
316	3-987-623-01	CLAMP, HARNESS	
317	3-987-624-01	COVER (C) (870), HINGE (TRV65/TRV65PK/TRV615)	
317	3-987-624-11	COVER (C) (870), HINGE(TRV35/TRV35E)	
317	3-987-624-21	COVER (C) (870), HINGE (TRV15E/TRV15EP)	
317	3-987-624-31	COVER (C) (870), HINGE (TRV15/TRV15PK/TRV25/TRV25PK/TRV215)	
318	3-987-585-01	SHEET, MODEL NAME(TRV65)	
318	3-987-585-11	SHEET, MODEL NAME(TRV15/TRV15PK)	
318	3-987-585-21	SHEET, MODEL NAME(TRV25)	
318	3-987-585-31	SHEET, MODEL NAME(TRV35)	
318	3-987-585-41	SHEET, MODEL NAME(TRV35E)	
318	3-987-585-51	SHEET, MODEL NAME(TRV15E)	
318	3-987-586-01	SHEET, MODEL NAME(TRV615)	
318	3-987-586-11	SHEET, MODEL NAME(TRV215)	
LCD901	1-803-035-21	INDICATOR MODULE, LIQUID CRYST (TRV35/TRV65/TRV65PK/TRV615/TRV35E)	
LCD901	1-803-040-21	INDICATOR MODULE, LIQUID CRYST (TRV15/TRV15PK/TRV15E/TRV15EP/TRV25/TRV25PK/TRV215)	
⚠ND801	1-517-751-11	TUBE, FLUORESCENT,COLD CATHODE (TRV15/TRV15PK/TRV15E/TRV15EP/TRV25/TRV25PK/TRV215)	
⚠ND801	1-517-752-11	TUBE, FLUORESCENT,COLD CATHODE (TRV35/TRV65/TRV65PK/TRV615/TRV35E)	
⚠ND802	1-517-759-11	LIGHT, BACK (TRV65/TRV65PK/TRV615)	

6-1-8. EVF BLOCK ASSEMBLY (COLOR EVF) (TRV93)

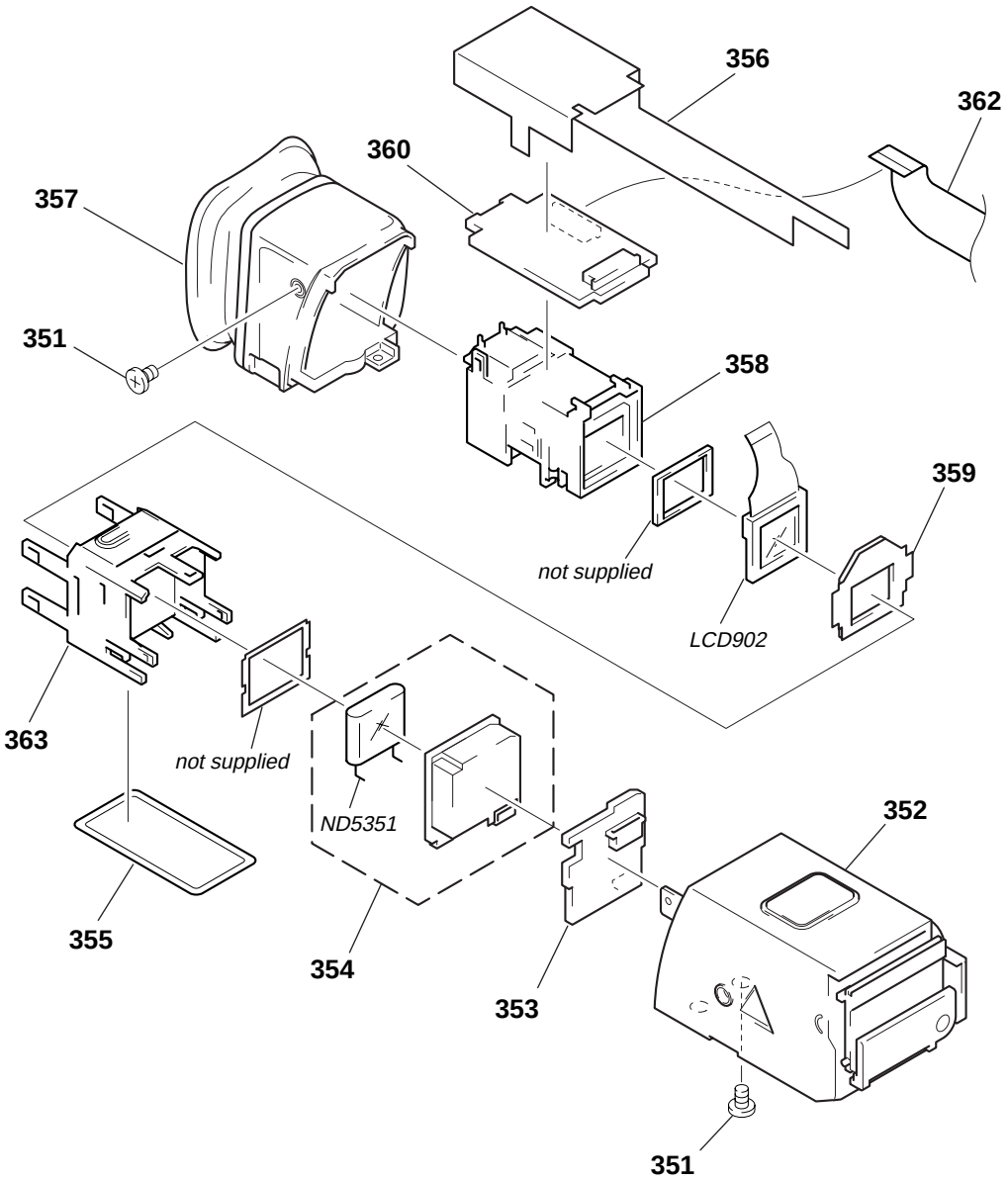

The components identified by mark ⚠ or dotted line with mark ⚠ are critical for safety. Replace only with part number specified.	Les composants identifiés par une marque ⚠ sont critiques pour la sécurité. Ne les remplacer que par une piéce portant le numéro spécifié.

Ref. No.	Part No.	Description	Remark
351	3-968-729-61	SCREW (M2X3), LOCK ACE, P2	
352	X-3948-235-1	CABINET (FRONT) (884) ASSY,EVF	
353	A-7073-438-A	VF-120 BOARD BOARD, COMPLETE	
354	A-7073-439-A	LB-54 BOARD BOARD, COMPLETE	
* 355	3-987-667-01	SHEET, VF LIGHT INTERCEPTION	
* 356	3-987-666-01	SHEET (860), INSULATING, VF	
357	X-3948-236-1	CABINET(REAR)(SC)(884)ASSY,EVF	
358	X-3948-229-1	LENS ASSY (860), VF	
* 359	3-960-302-11	CUSHION (1), LCD	
360	A-7073-437-A	VF-119 BOARD , COMPLETE	
362	1-668-962-11	FP-638 FLEXIBLE BOARD	
363	X-3946-886-1	HOLDER ASSY, PRISM	
LCD902	8-753-023-37	LCX024AK	
⚠ND5351	1-517-414-51	FLUORESCENT TUBE (0.55 INCH)	

6-1-9. EVF BLOCK ASSEMBLY (B/W EVF) (EXCEPT TRV93)

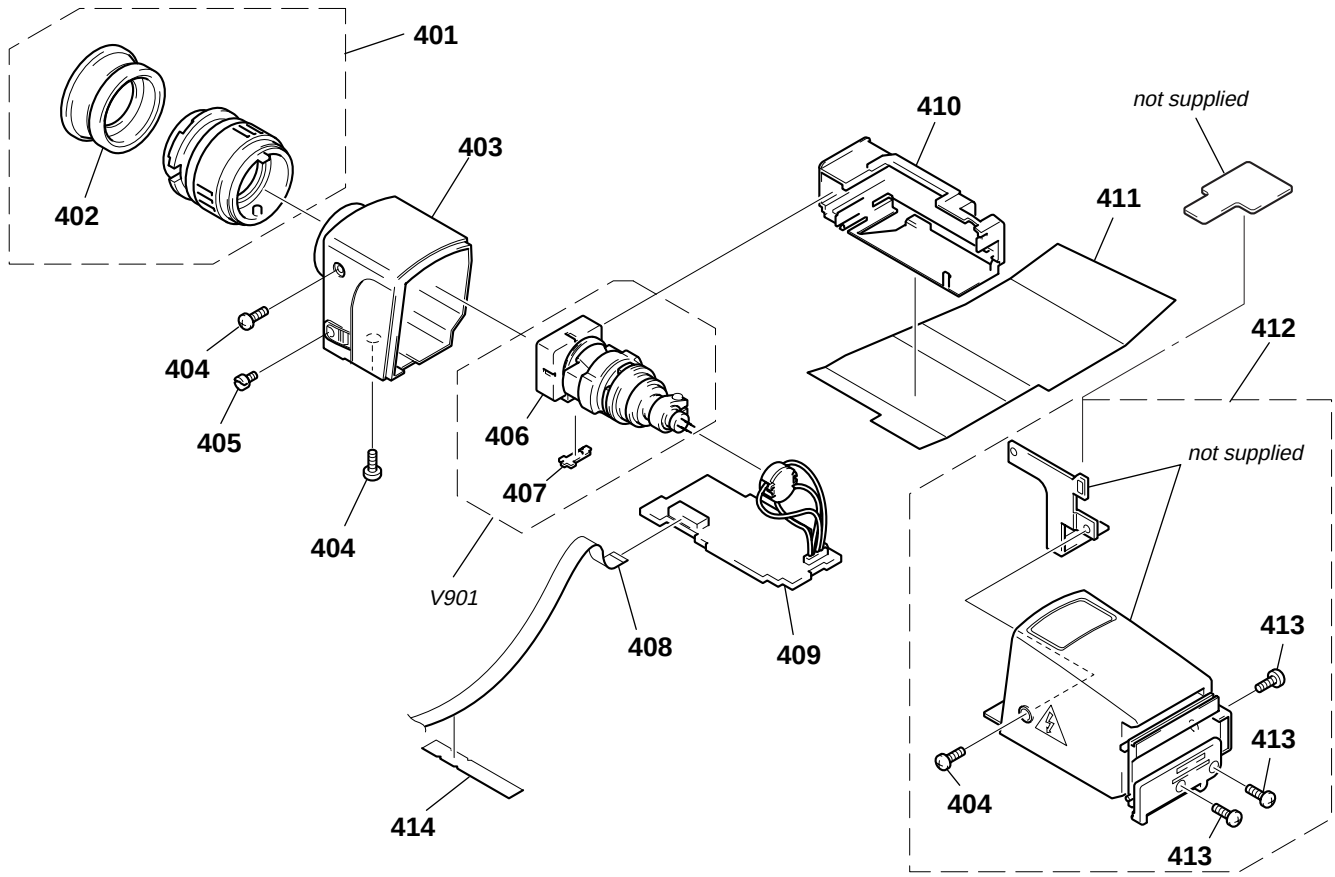

The components identified by mark ⚠ or dotted line with mark ⚠ are critical for safety. Replace only with part number specified.	Les composants identifiés par une marque ⚠ sont critiques pour la sécurité. Ne les remplacer que par une piéce portant le numéro spécifié.

Ref. No.	Part No.	Description	Remark
401	X-3944-966-1	FINDER ASSY	
402	3-963-391-01	EYE CUP	
403	X-3948-278-1	CABINET (REAR) (878) B ASSY (EXCEPT TRV85//TRV815)	
403	X-3948-281-1	CABINET (REAR) (887) B ASSY (TRV85/TRV815)	
404	3-968-729-61	SCREW (M2X3), LOCK ACE, P2	
405	3-975-898-01	SCREW (T), F LOCK	
406	3-977-292-01	MASK, CRT	
407	3-725-130-01	COVER, HINGE VOLTAGE	
408	1-783-241-11	CABLE, FLEXIBLE FLAT (FFC-235)	
409	A-7056-774-A	VF-99(HP) BOARD, COMPLETE (TRV15E/TRV15EP/TRV35E)	
409	A-7066-792-A	VF-99(VHL4) BOARD, COMPLETE (EXCEPT TRV15E/TRV15EP/TRV35E)	
410	X-3948-279-1	HOLDER (878) ASSY, CRT	
* 411	3-987-844-01	SHEET, VF (B/W) ELECTROSTATIC	
412	X-3948-277-1	CABINET (FRONT) (878) B ASSY (TRV65/TRV65PK/TRV615)	
412	X-3948-280-1	CABINET (FRONT) (887) B ASSY (TRV85)	
412	X-3948-362-1	CABINET (FRONT) (846) B ASSY (TRV15/TRV15PK/TRV15E/TRV15EP/TRV25/TRV25PK/TRV215)	
412	X-3948-363-1	CABINET (FRONT) (872) B ASSY (TRV35/TRV35E)	
412	X-3948-366-1	CABINET (FRONT) (887D) B ASSY (TRV815)	
413	3-948-339-61	TAPPING	
* 414	3-987-843-01	SHEET, VF FLEXIBLE LOCK	
⚠V901	1-452-673-31	CRT ASSY (M01KXX90WB)(EXCEPT TRV93)	

6-1-10. MAIN BOARDS ASSEMBLY

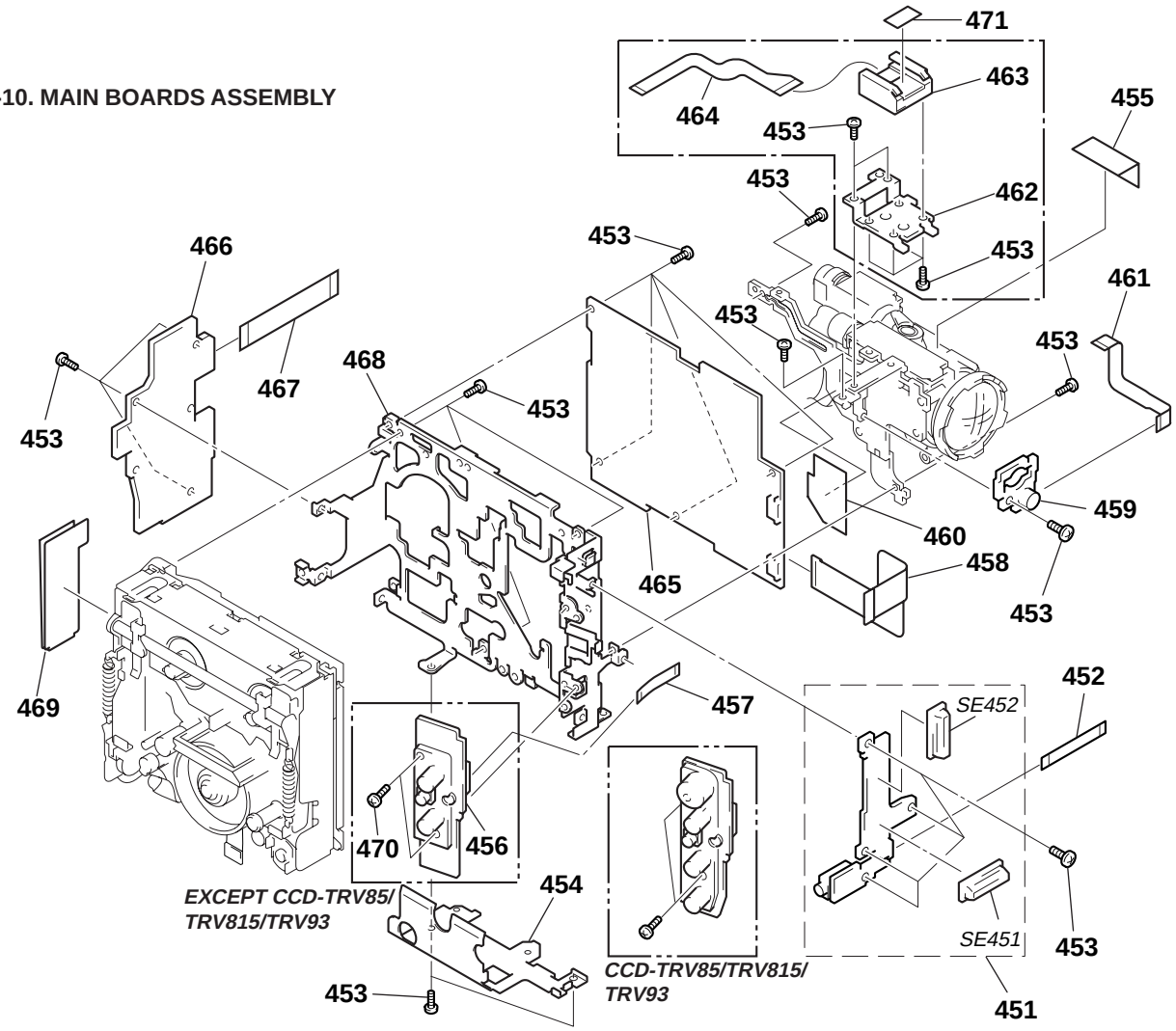

Ref. No.	Part No.	Description	Remark
451	A-7073-404-A	SE-66(V) BOARD, COMPLETE (TRV15/TRV15PK/TRV15E/TRV15EP)	
451	A-7073-409-A	SE-66(VH) BOARD, COMPLETE (TRV65/TRV65PK/TRV615)	
451	A-7073-434-A	SE-67(VH) BOARD, COMPLETE (TRV85/TRV815/TRV93)	
451	A-7073-443-A	SE-66(VMM) BOARD, COMPLETE (TRV25/TRV25PK/TRV215/TRV35/TRV35E)	
452	1-668-957-11	FP-621 FLEXIBLE BOARD	
453	3-713-786-21	SCREW (M2X3)	
* 454	3-987-675-01	FRAME (B), MD (EXCEPT TRV65/TRV65PK/TRV85/TRV93/TRV615/TRV815)	
454	X-3948-224-1	FRAME (B) ASSY, MD (TRV65/TRV65PK/TRV85/TRV93/TRV615/TRV815)	
* 455	3-989-122-01	SHEET, LENS INSULATING	
456	A-7073-405-A	PJ-83(M) BOARD, COMPLETE (EXCEPT TRV65/TRV65PK/TRV85/TRV93/TRV615/TRV815)	
456	A-7073-410-A	PJ-83(H) BOARD, COMPLETE (TRV65/TRV65PK/TRV615)	
456	A-7073-433-A	PJ-84(H) BOARD, COMPLETE (TRV85/TRV815/TRV93)	
457	1-668-956-11	FP-620 FLEXIBLE BOARD	
458	1-668-960-11	FP-629 FLEXIBLE BOARD	
459	A-7073-454-A	VL-19 BOARD, COMPLETE (TRV93)	
* 460	3-987-718-01	PROTECTOR, HS FLEXIBLE (TRV65/TRV65PK/TRV85/TRV93/TRV615/TRV815)	
461	1-668-961-11	FP-632 FLEXIBLE BOARD (TRV93)	
462	3-987-719-01	BRACKET, SHOE (TRV15:BR/TRV15PK/TRV25PK/TRV215:CND/TRV35/TRV65/TRV615/TRV85/TRV815/TRV15E/TRV35E)	

Ref. No.	Part No.	Description	Remark
463	1-774-867-31	CONNECTOR,EXTERNAL(HOT SHOE)8P (TRV65/TRV65PK/TRV85/TRV615/TRV815)	
463	X-3946-197-1	SHOE ASSY(TRV35/TRV35E)	
464	1-668-978-11	FP-633 FLEXIBLE BOARD (TRV65/TRV65PK/TRV85/TRV615/TRV815)	
465	A-7093-449-A	VC-195(VHI0U) BOARD, COMPLETE (TRV65/TRV65PK/TRV85/TRV615/TRV815)	
465	A-7093-450-A	VC-195(VMMIOU) BOARD, COMPLETE(TRV35)	
465	A-7093-451-A	VC-195(7VMMU) BOARD, COMPLETE (TRV25/TRV25PK/TRV215)	
465	A-7093-452-A	VC-195(7VZU) BOARD, COMPLETE (TRV15/TRV15PK)	
465	A-7093-455-A	VC-195(VMM0P) BOARD, COMPLETE (TRV35E)	
465	A-7093-456-A	VC-195(VZ0P) BOARD, COMPLETE (TRV15E/TRV15EP)	
465	A-7093-459-A	VC-195(VHCIBOU) BOARD, COMPLETE (TRV93)	
466	A-7073-408-A	DD-105(VMMIF) BOARD, COMPLETE (TRV65/TRV65PK/TRV85/TRV615/TRV815)	
466	A-7073-416-A	DD-105(VMMI) BOARD, COMPLETE (TRV15:E,HK,BR/TRV15PK/TRV25PK/TRV35:E,HK/TRV15E/TRV35E)	
466	A-7073-417-A	DD-105(VMMIF) BOARD, COMPLETE (TRV15:US,CND/TRV25/TRV215)	
466	A-7073-453-A	DD-105(VCIBF) BOARD, COMPLETE (TRV93)	
467	1-668-958-11	FP-622 FLEXIBLE BOARD	
468	3-987-711-01	FRAME (A), MD	
* 469	3-987-716-01	PROTECTOR, LS FLEXIBLE	
470	3-948-339-61	TAPPING	
471	2-532-810-00	CUSHION	
SE451	1-803-041-11	SENSOR, ANGULAR VELOCITY (YAW)	
SE452	1-803-041-21	SENSOR, ANGULAR VELOCITY (PITCH)	

6-1-11. BATTERY PANEL AND CCD BLOCK ASSEMBLY

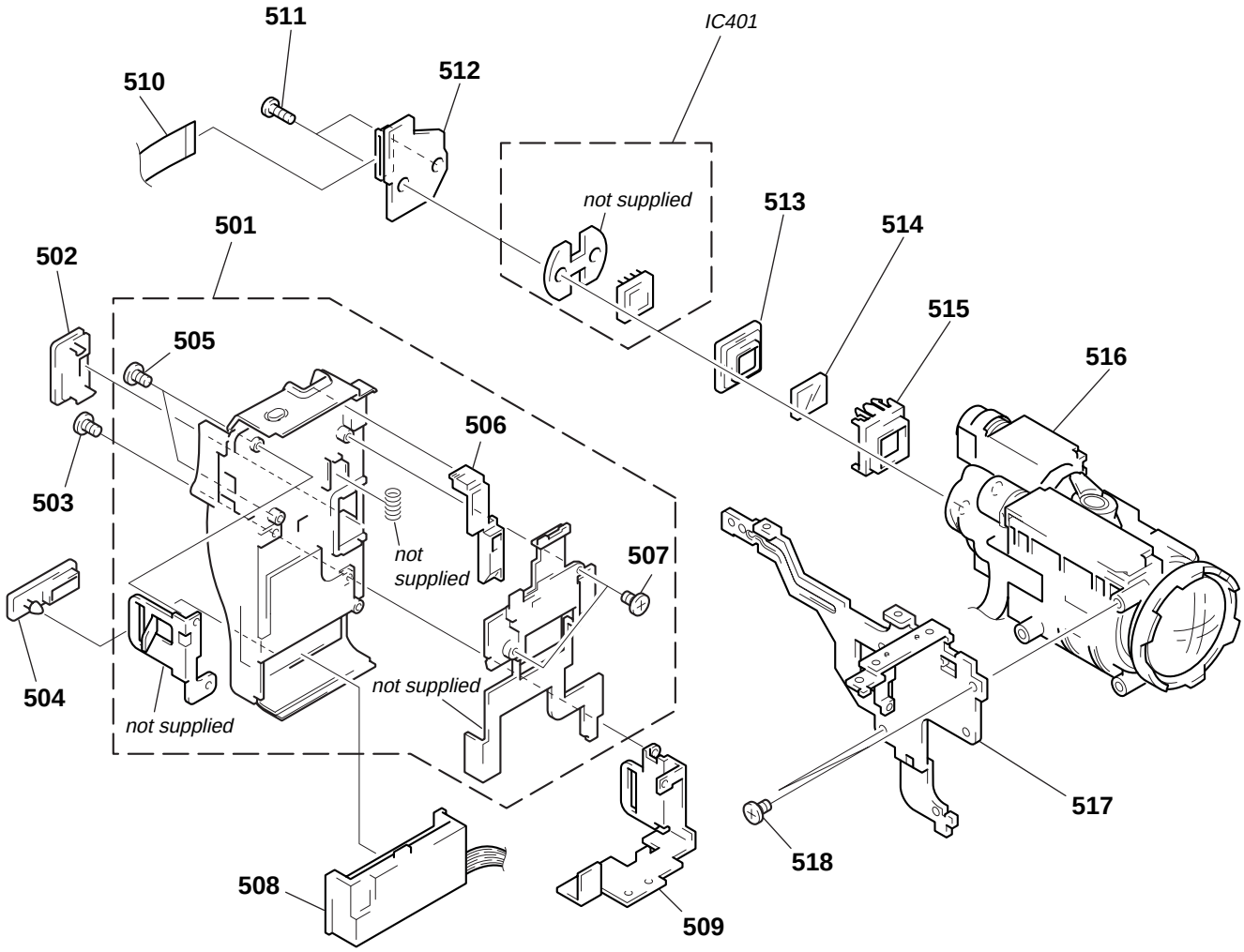

Be sure to read "Note on the CCD Imager replacement" on page 4–9 when changing the CCD imager.

Ref. No.	Part No.	Description	Remark
501	X-3948-171-1	PANEL ASSY, BATTERY (EXCEPT TRV15:BR/TRV85/TRV93/TRV815)	
501	X-3948-172-1	PANEL ASSY, BATTERY (TRV85/TRV815/TRV93)	
501	X-3948-461-1	PANEL ASSY, BATTER (TRV15:BR)	
502	3-975-752-01	LID (BT), CPC	
503	3-962-826-01	SCREW (2X4)	
* 504	3-987-683-01	LID, BATTERY	
505	3-968-729-61	SCREW (M2X3), LOCK ACE, P2	
506	3-987-656-01	LID, JACK	
507	3-713-791-51	SCREW (M1.7X3.5), TAPPING, P2	
508	1-694-384-11	TERMINAL BOARD, BATTERY	
509	3-987-679-01	SHEET METAL (LOWER), STRAP	
510	1-668-959-11	FP-623 FLEXIBLE BOARD	
511	3-318-203-11	SCREW (B1.7X6), TAPPING	
512	A-7073-407-A	CD-197 BOARD, COMPLETE (EXCEPT TRV85/TRV93/TRV815)	
512	A-7073-435-A	CD-198 BOARD, COMPLETE (TRV85/TRV815/TRV93)	
513	3-953-817-01	RUBBER (F), SEAL (TRV15/TRV15PK/TRV15E/TRV15EP)	

Ref. No.	Part No.	Description	Remark
513	3-968-054-11	RUBBER (FM), SHIELD (EXCEPT TRV15/TRV15PK/TRV15E/TRV15EP)	
514	1-758-084-21	FILTER BLOCK, OPTICAL (EXCEPT TRV15/TRV15PK/TRV15E/TRV15EP)	
514	1-758-133-21	FILTER BLOCK, OPTICAL (TRV15/TRV15PK/TRV15E/TRV15EP)	
515	3-978-981-11	ADAPTOR (FK), CCD FITTING	
516	8-848-722-01	DEVICE, LENS LSV-600A(SOC) (TRV35/TRV65/TRV65PK/TRV615/TRV85/TRV815/TRV93/TRV35E)	
516	8-848-724-01	DEVICE, LENS LSV-601A(SOC) (TRV15/TRV15PK/TRV15E/TRV15EP/TRV25/TRV25PK/TRV215)	
517	3-987-712-01	FRAME, LENS	
518	3-948-339-61	TAPPING	
IC401	A-7030-862-A	CCD BLOCK ASSY (TRV15/TRV15PK)	
IC401	A-7030-865-A	CCD BLOCK ASSY (TRV25/TRV25PK/TRV215/TRV35/TRV65/TRV65PK/TRV615/TRV85/TRV815/TRV93)	
IC401	A-7030-871-A	CCD BLOCK ASSY (TRV35E)	
IC401	A-7030-874-A	CCD BLOCK ASSY (TRV15E/TRV15EP)	

6-1-12. DEVICE LENS (LSV-600A/LSV-601A)

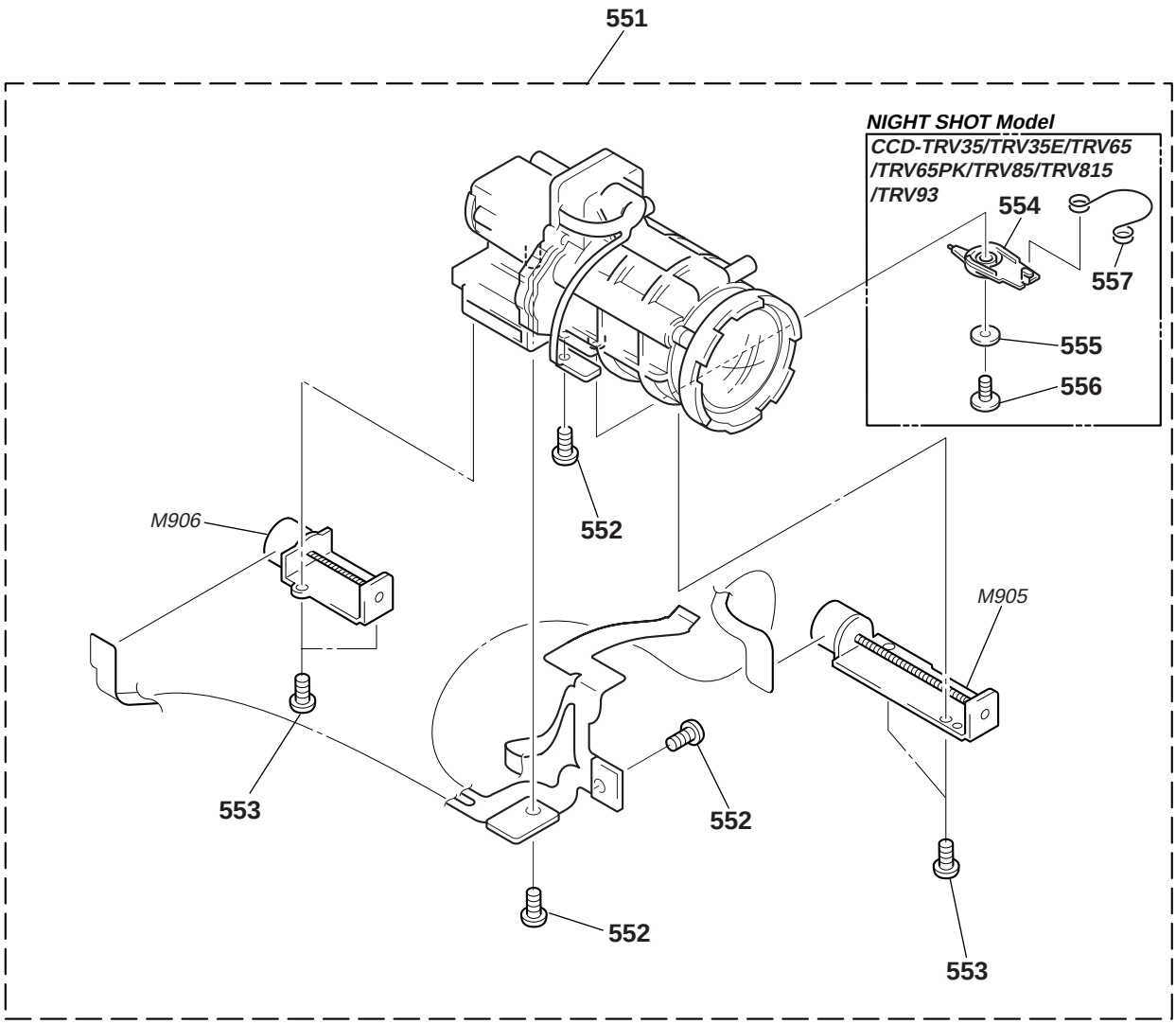

Ref. No.	Part No.	Description	Remark
551	8-848-722-01	DEVICE, LENS LSV-600A(SOC)(NIGHT SHOT) (TRV35/TRV65/TRV65PK/TRV615/TRV85/TRV815/TRV93/TRV35E)	
551	8-848-724-01	DEVICE, LENS LSV-601A(SOC) (TRV15/TRV15PK/TRV15E/TRV15EP/TRV25/TRV25PK/TRV215)	
552	3-713-791-51	SCREW (M1.7X3.5), TAPPING, P2	
553	3-713-791-41	SCREW (M1.7X5), TAPPING, PS	
554	3-979-029-01	LEVER, IR	
555	2-327-405-01	WASHER	
556	3-623-756-21	SCREW (B1.7x5), P	
557	3-979-037-11	SPRING, RETURN	
M905	1-763-047-11	MOTOR, FOCUS STEPPING	
M906	1-763-046-11	MOTOR, ZOOM STEPPING	

6-1-13. CASSETTE COMPARTMENT ASSEMBLY

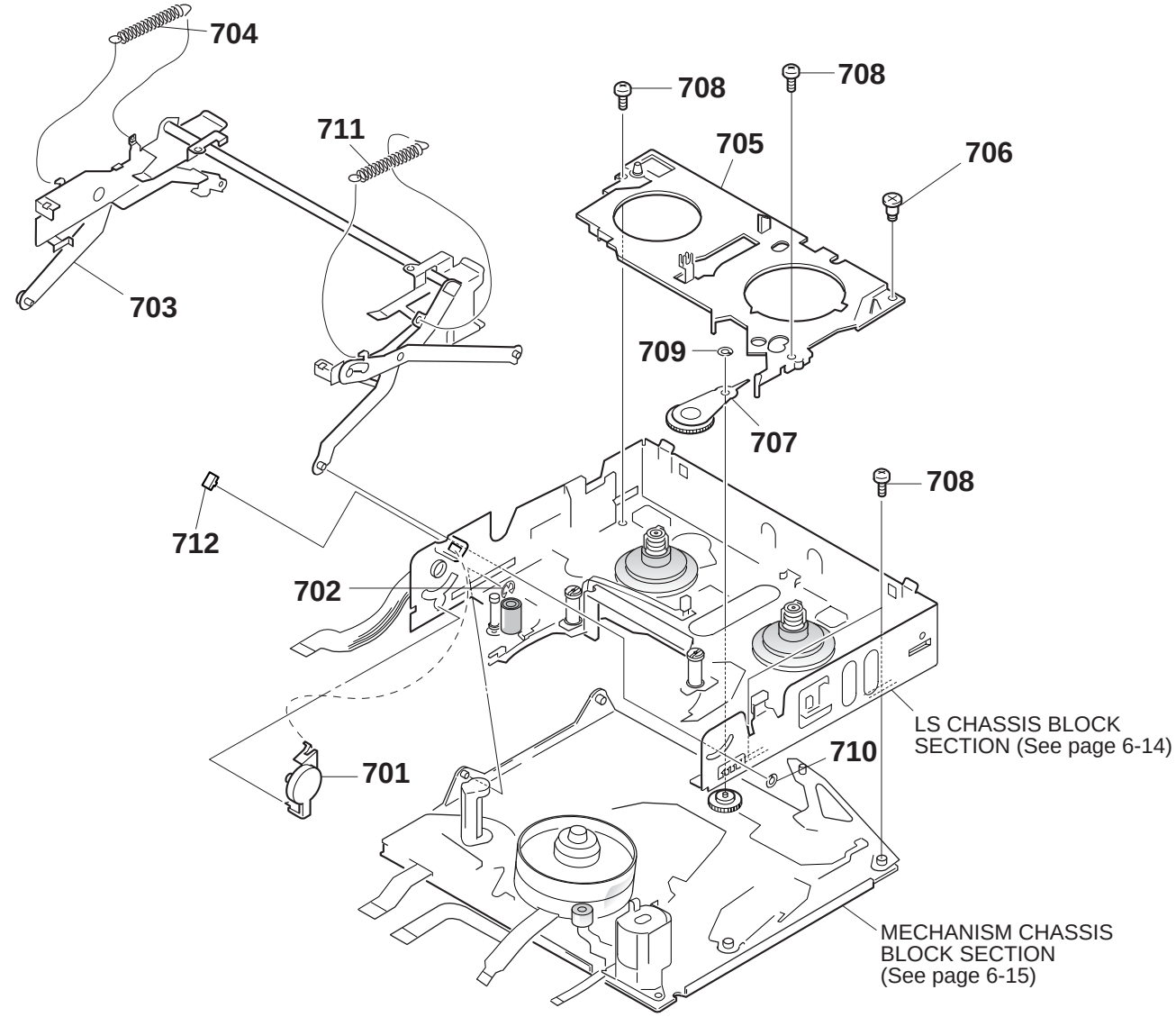

Ref. No.	Part No.	Description	Remark
701	A-7040-421-A	DAMPER ASSY	
702	7-624-102-04	STOP RING 1.5, TYPE -E	
703	X-3945-400-X	CASSETTE COMPARTMENT ASSY	
704	3-965-587-03	SPRING, TENSION	
705	3-965-584-08	RETAINER, GOOSENECK	
706	3-976-055-01	SCREW (M1.4X1)	
707	X-3945-399-1	GEAR ASSY, GOOSENECK	
708	3-947-503-01	SCREW (M1.4X2.5)	
709	3-331-007-21	WASHER	
710	3-727-176-01	WASHER, STOPPER	
711	3-973-268-01	SPRING, TENSION	
712	3-971-076-01	FASTENER, D	

6-1-14. LS CHASSIS ASSEMBLY

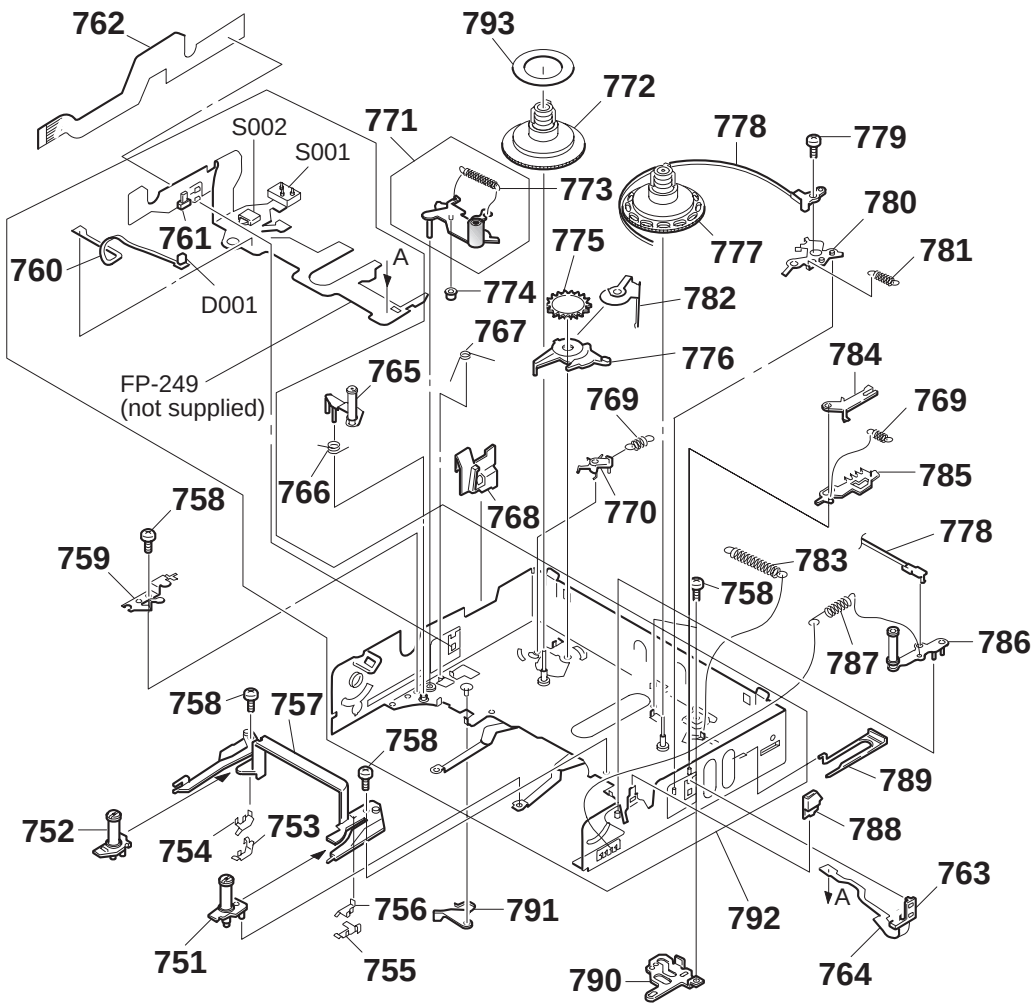

Ref. No.	Part No.	Description	Remark
751	A-7040-419-A	BASE (S) BLOCK ASSY, GUIDE	
752	A-7040-418-B	BASE (T) BLOCK ASSY, GUIDE	
753	3-965-559-01	STOPPER (T)	
754	3-965-557-01	STOPPER (T), GB	
755	3-965-558-01	STOPPER (S)	
756	3-965-556-01	STOPPER (S), GB	
757	3-965-553-01	RAIL, GUIDE	
758	3-947-503-01	SCREW (M1.4X2.5)	
759	3-965-573-01	RETAINER, TG4	
760	1-658-213-11	FP-355 FLEXIBLE BOARD	
761	3-965-552-01	HOLDER (T), SENSOR	
762	1-657-786-13	FP-221 FLEXIBLE BOARD	
763	3-965-551-01	HOLDER (S), SENSOR	
764	1-658-214-11	FP-356 FLEXIBLE BOARD	
765	A-7040-417-A	ARM BLOCK ASSY, TG4	
766	3-965-574-01	SPRING, TORSION	
767	3-965-575-01	SPRING (PINCH), TORSION	
768	3-965-568-01	GUIDE, LOCK	
769	3-965-562-01	SPRING (RATCHET), TENSION	
770	3-965-581-03	RATCHET, T	
771	X-3945-394-1	ARM ASSY, PINCH	
772	X-3945-398-2	DECK ASSY, REEL, T	
773	3-965-648-01	SPRING (PINCH), TENSION	
774	3-965-579-01	ROLLER, PINCH PRESS	

Ref. No.	Part No.	Description	Remark
775	3-965-563-01	GEAR, T SOFT	
776	3-965-565-01	CLAW, T SOFT	
777	X-3945-397-1	DECK ASSY, REEL, S	
778	X-3945-396-1	BAND ASSY, TENSION REGULATOR	
779	3-945-756-01	SCREW (M1.4X3)	
780	3-965-583-01	ARM, RVS	
781	3-965-580-01	SPRING, TENSION	
782	3-966-384-01	SPRING, T SOFT	
783	3-965-578-01	SPRING, TENSION COIL	
784	3-965-560-01	RATCHET, S	
785	3-965-561-01	PLATE, RELEASE, S RATCHET	
786	X-3945-395-1	ARM ASSY, TG1	
787	3-965-576-01	SPRING (TG1), TENSION	
788	3-965-567-01	LID OPEN	
789	3-965-566-01	COVER, LS GUIDE	
* 790	3-965-577-01	PLATE, CAM, LS	
791	3-965-569-01	ARM, EJ	
792	A-7040-427-A	CHASSIS (S1) ASSY, LS	
* 793	3-972-838-01	SPACER, REEL	
D001	8-719-988-42	DIODE GL453	
S001	1-692-614-11	SWITCH, PUSH (3 KEY) (Hi8 MP, ME/MP, REC PROOF)	
S002	1-572-688-11	SWITCH, PUSH (1 KEY)(C.C. LOCK)	

6-1-15. MECHANISM CHASSIS ASSEMBLY

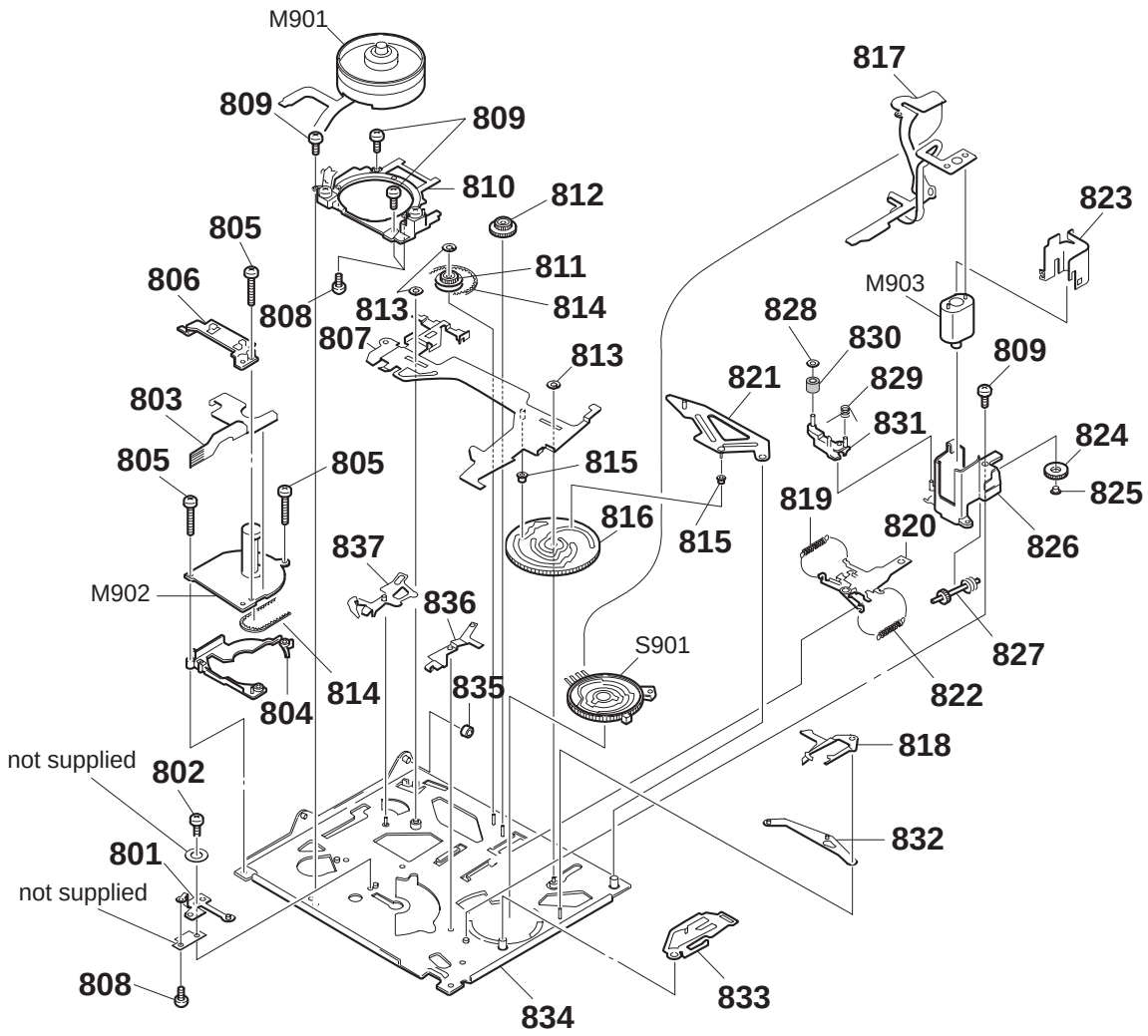

Ref. No.	Part No.	Description	Remark
801	X-3947-343-1	GROUND (IM) ASSY, SHAFT	
802	3-965-550-02	SCREW (M1.7X1.6)	
803	1-657-785-11	FP-248 FLEXIBLE BOARD	
804	3-965-545-01	SPACER, CAPSTAN	
805	3-965-549-01	SCREW (M1.4 X 6.5)	
806	3-966-349-01	HOLDER, FLEXIBLE	
807	3-971-644-01	SLIDER (2), M	
808	3-971-939-01	SCREW (M1.4)	
809	3-947-503-01	SCREW (M1.4X2.5)	
810	A-7040-416-A	BASE BLOCK ASSY, DRUM	
811	3-965-527-01	GEAR, CHANGE	
812	3-965-544-01	GEAR, RELAY	
813	3-331-007-21	WASHER	
814	3-965-546-01	BELT, TIMING	
815	3-965-533-01	ROLLER, LS	
816	3-965-528-01	GEAR, CAM	
817	1-657-784-11	FP-220 FLEXIBLE BOARD	
818	3-965-529-01	PLATE, REGULATOR (LIMITTER ARM T), COIL	
819	3-965-536-01	SPRING (LIMITTER ARM T), COIL	
820	X-3945-388-1	SLIDER ASSY, GL	
821	3-965-532-01	ARM, LS	
822	3-965-535-01	SPRING (LIMITTER ARM S), COIL	

Ref. No.	Part No.	Description	Remark
823	3-965-542-01	SHIELD, MOTOR	
824	3-965-539-01	GEAR (A)	
825	3-965-538-01	SLEEVE, MOTOR HOLDER	
826	3-965-540-01	HOLDER, MOTOR	
827	3-965-541-01	SHAFT, WORM	
828	3-321-393-01	WASHER, STOPPER	
829	3-965-724-01	SPRING, TORSION	
830	A-7040-423-A	ROLLER BLOCK ASSY, HC	
831	X-3945-407-1	ARM ASSY, HC ROLLER	
832	3-965-531-01	ARM, GL	
833	3-965-530-01	PLATE (2), REGULATOR, TENSION	
834	X-3947-915-2	CHASSIS ASSY, MECHANICAL	
835	3-965-526-02	ROLLER, LS GUIDE	
836	3-965-547-01	ARM, HC DRIVING	
837	3-965-534-01	PLATE, PRESS, PINCH	
M901	A-7048-851-A	DRUM ASSY (DGH-0D5A-R)(PAL) (TRV15E/TRV15EP/35E)	
M901	A-7048-842-A	DRUM ASSY (DGH-0E1A-R)(NTSC)(5HEAD) (TRV65/TRV65PK/TRV85/TRV93/TRV615/TRV815)	
M901	A-7048-870-A	DRUM ASSY (DGH-0E3A-R)(NTSC)(3HEAD) (TRV15/TRV15PK/TRV25/TRV25PK/TRV35TRV215)	
M902	8-835-531-32	CAPSTAN ASSY	
M903	X-3945-401-1	MOTOR ASSY, DC (LOADING)	
S901	1-762-436-15	SWITCH, ROTARY (ENCODER)	

6-2. ELECTRICAL PARTS LIST

Note:

The components identified by mark ⚠ or dotted line with mark ⚠ are critical for safety.
Replace only with part number specified.

Les composants identifiés par une marque ⚠ sont critiques pour la sécurité.
Ne les remplacer que par une piéce portant le numéro spécifié.

When indicating parts by reference number, please include the board name.

- Due to standardization, replacements in the parts list may be different from the parts specified in the diagrams or the components used on the set.
- -XX, -X mean standardized parts, so they may have some difference from the original one.
- Items marked "*" are not stocked since they are seldom required for routine service. Some delay should be anticipated when ordering these items.
- RESISTORS
  All resistors are in ohms
  METAL: Metal-film resistor
  METAL OXIDE: Metal Oxide-film resistor
  F : nonflammable
- SEMICONDUCTORS
  In each case, u: μ , for example:
  uA...: μ A..., uPA...: μ PA..., uPB...: μ PB..., uPC...: μ PC..., uPD...: μ PD...
- CAPACITORS
  uF : μ F
- COILS
  uH : μ H
- Abbreviation
  Canadian model is abbreviated as CND.
  East European model is abbreviated as EE.
  Hong Kong model is abbreviated as HK.
  North European model is abbreviated as NE.
  Russian model is abbreviated as RU.
  Chinese model is abbreviated as CN.
  Tourist model is abbreviated as JE.
  Brazilian model is abbreviated as BR.
  Australian model is abbreviated as AUS.

Ref. No.	Part No.	Description			Remark
	A-7073-407-A	CD-197 BOARD, COMPLETE			
		**********			
		(EXCEPT TRV85/TRV93/TRV815)			
		(Ref.No. 4,000 Series)			
	A-7073-435-A	CD-198 BOARD, COMPLETE			
		**********			
		(TRV85/TRV93/TRV815)			
		(Ref.No. 9,000 Series)			
		(IC401 is not including to the mounted board)			
		< CAPACITOR >			
C401	1-164-156-11	CERAMIC CHIP	0.1uF		25V
C405	1-135-210-11	TANTALUM CHIP	4.7uF	20%	10V
C406	1-135-214-21	TANTAL. CHIP	4.7uF	20%	20V
		< CONNECTOR >			
CN401	1-766-346-21	CONNECTOR, FFC/FPC 16P			
		< IC >			
IC401	A-7030-862-A	CCD BLOCK ASSY (206 SERVICE)(CCD IMAGR)			
		(TRV15/TRV15PK)			
IC401	A-7030-865-A	CCD BLOCK ASSY (209 SERVICE)(CCD IMAGR)			
		(TRV25/TRV25PK/TRV35/TRV65/TRV65PK/			
		TRV85/TRV93/TRV215/TRV615/TRV815)			
IC401	A-7030-871-A	CCD BLOCK ASSY (211 SERVICE)(CCD IMAGR)			
		(TRV35E)			
IC401	A-7030-874-A	CCD BLOCK ASSY (207 SERVICE)(CCD IMAGR)			
		(TRV15E/TRV15EP)			
		< COIL >			
L401	1-414-757-11	INDUCTOR	100uH		
		< TRANSISTOR >			
Q402	8-729-117-73	TRANSISTOR 2SC4178-F13F14-T1			
		< RESISTOR >			
R404	1-216-829-11	METAL CHIP	4.7K	5%	1/16W
R405	1-216-809-11	METAL CHIP	100	5%	1/16W

Ref. No.	Part No.	Description	Remark
	A-7073-403-A	CF-50(E7V) BOARD, COMPLETE	
		**********	
		(TRV15/TRV15PK/TRV15E/TRV15EP/TRV25/TRV25PK/TRV215)	
	A-7073-412-A	CF-50(ESV) BOARD, COMPLETE	
		**********	
		(TRV35/TRV35E/TRV65/TRV65PK/TRV615)	
		(Ref.No. 4,000 Series)	
	A-7073-431-A	CF-51(VH) BOARD, COMPLETE	
		**********	
		(TRV85/TRV815)	
	A-7073-456-A	CF-51(VHC) BOARD, COMPLETE (TRV93)	
		**********	
		(Ref.No. 9,000 Series)	
		< BATTERY HOLDER >	
BH001	1-550-104-11	HOLDER, BATTERY	
		< CONNECTOR >	
CN001	1-778-637-21	CONNECTOR, FFC/FPC (ZIF) 50P	
CN002	1-774-765-11	CONNECTOR, FFC/FPC 8P	
CN003	1-580-055-21	PIN, CONNECTOR 2P	
CN005	1-779-064-11	PIN, CONNECTOR (PC BOARD) 12P	
CN006	1-778-508-21	PIN, CONNECTOR (PC BOARD) 6P	
CN007	1-779-334-11	CONNECTOR, FFC/FPC 20P (TRV93)	
* CN008	1-778-283-11	CONNECTOR, FFC/FPC 4P (EXCEPT TRV93)	
		< DIODE >	
D001	8-719-059-57	DIODE MAZJ082DFLSO	
D005	8-719-420-14	DIODE MA8082-TX	
D006	8-719-420-14	DIODE MA8082-TX	
D008	8-719-404-49	DIODE MA111-TX	

Be sure to read "Note on the CCD Imager replacement" on page 4–9 when changing the CCD imager.

Ref. No.	Part No.	Description	Remark
		< TRANSISTOR >	
Q001	8-729-402-42	TRANSISTOR UN5213-TX (EXCEPT TRV93)	
Q003	8-729-230-63	TRANSISTOR 2SD1819A-QRS-TX (EXCEPT TRV15/TRV15PK/TRV15E/TRV15EP/TRV25/TRV25PK/TRV215)	
Q005	8-729-230-72	TRANSISTOR 2SA1362-YG-EL (EXCEPT TRV15/TRV15PK/TRV15E/TRV15EP/TRV25/TRV25PK/TRV215)	
		< RESISTOR >	
R003	1-216-833-11	METAL CHIP 10K 5% 1/16W (EXCEPT TRV15/TRV15PK/TRV15E/TRV15EP/TRV25/TRV25PK/TRV215)	
R005	1-216-833-11	METAL CHIP 10K 5% 1/16W	
R006	1-216-833-11	METAL CHIP 10K 5% 1/16W	
R007	1-216-833-11	METAL CHIP 10K 5% 1/16W	
R008	1-216-833-11	METAL CHIP 10K 5% 1/16W	
R009	1-216-833-11	METAL CHIP 10K 5% 1/16W	
R013	1-216-822-11	METAL CHIP 1.2K 5% 1/16W	
R015	1-216-822-11	METAL CHIP 1.2K 5% 1/16W	
R016	1-216-822-11	METAL CHIP 1.2K 5% 1/16W	
R019	1-216-823-11	METAL CHIP 1.5K 5% 1/16W	
R020	1-216-823-11	METAL CHIP 1.5K 5% 1/16W	
R022	1-216-823-11	METAL CHIP 1.5K 5% 1/16W	
R023	1-216-825-11	METAL CHIP 2.2K 5% 1/16W	
R025	1-216-825-11	METAL CHIP 2.2K 5% 1/16W	
R026	1-216-825-11	METAL CHIP 2.2K 5% 1/16W	
R029	1-216-828-11	METAL CHIP 3.9K 5% 1/16W	
R031	1-216-828-11	METAL CHIP 3.9K 5% 1/16W	
R032	1-216-828-11	METAL CHIP 3.9K 5% 1/16W	
R036	1-216-832-11	METAL CHIP 8.2K 5% 1/16W	
R038	1-216-832-11	METAL CHIP 8.2K 5% 1/16W	
R039	1-216-838-11	METAL CHIP 27K 5% 1/16W	
R041	1-216-838-11	METAL CHIP 27K 5% 1/16W	
R049	1-216-849-11	METAL CHIP 220K 5% 1/16W (EXCEPT TRV15/TRV15PK/TRV15E/TRV15EP/TRV25/TRV25PK/TRV215)	
R050	1-216-853-11	METAL CHIP 470K 5% 1/16W (EXCEPT TRV15/TRV15PK/TRV15E/TRV15EP/TRV25/TRV25PK/TRV215)	
R051	1-216-837-11	METAL CHIP 22K 5% 1/16W (EXCEPT TRV15/TRV15PK/TRV15E/TRV15EP/TRV25/TRV25PK/TRV215)	
R052	1-216-829-11	METAL CHIP 4.7K 5% 1/16W (EXCEPT TRV15/TRV15PK/TRV15E/TRV15EP/TRV25/TRV25PK/TRV215)	
R053	1-216-864-11	METAL CHIP 0 5% 1/16W (TRV15/TRV15PK/TRV15E/TRV15EP/TRV25/TRV25PK/TRV215)	
		< SWITCH >	
S003	1-762-851-21	SWITCH, KEY BOARD (DATE)	
S004	1-771-029-21	SWITCH, TACTILE (PROGRAM AE)	
S006	1-762-851-21	SWITCH, KEY BOARD (PICTURE EFFECT)	
S008	1-762-851-21	SWITCH, KEY BOARD (COUNTER RESET)	
S010	1-762-851-21	SWITCH, KEY BOARD (MENU)	
S012	1-771-029-21	SWITCH, TACTILE (EXPOSERE) (EXCEPT TRV15/TRV15PK/TRV15E/TRV15EP/TRV25/TRV25PK/TRV215)	
S013	1-762-851-21	SWITCH, KEY BOARD (END SEARCH)	
S015	1-771-025-21	SWITCH, ROTARY (ENCODER) (SEL/PUSH ENCH)	
S017	1-771-029-21	SWITCH, TACTILE (BACK LIGHT)	
S018	1-762-851-21	SWITCH, KEY BOARD (TITLE)	
S021	1-762-851-21	SWITCH, KEY BOARD (TIME)	
S022	1-762-851-21	SWITCH, KEY BOARD (DISPLAY)	
S024	1-762-648-21	SWITCH, SLIDE (START/STOP MODE)	
S027	1-771-029-21	SWITCH, TACTILE (FADER)(TRV85/TRV815/TRV93)	

Ref. No.	Part No.	Description	Remark
	A-7073-408-A	DD-105(VMMIF) BOARD, COMPLETE ********** (TRV65/TRV65PK/TRV85/TRV615/TRV815)	
	A-7073-416-A	DD-105(VMMI) BOARD, COMPLETE ********** (TRV15:E,HK,BR/TRV15PK/TRV25PK/TRV35/TRV15E/TRV15EP/TRV35E)	
	A-7073-417-A	DD-105(VMMIF) BOARD, COMPLETE ********** (TRV15:US,CND/TRV25/TRV215)	
	A-7073-453-A	DD-105(VCIBF) BOARD, COMPLETE (TRV93) ********** (Ref.No. 2,000 Series)	
		< CAPACITOR >	
C801	1-162-967-11	CERAMIC CHIP 0.0033uF 10% 50V	
C802	1-162-960-11	CERAMIC CHIP 220PF 10% 50V	
C803	1-107-826-11	CERAMIC CHIP 0.1uF 10% 16V	
C804	1-107-826-11	CERAMIC CHIP 0.1uF 10% 16V	
C805	1-107-826-11	CERAMIC CHIP 0.1uF 10% 16V	
C806	1-107-826-11	CERAMIC CHIP 0.1uF 10% 16V	
C807	1-162-970-11	CERAMIC CHIP 0.01uF 10% 25V	
C808	1-164-227-11	CERAMIC CHIP 0.022uF 10% 25V	
C809	1-162-967-11	CERAMIC CHIP 0.0033uF 10% 50V	
C810	1-164-227-11	CERAMIC CHIP 0.022uF 10% 25V	
C811	1-162-965-11	CERAMIC CHIP 0.0015uF 10% 50V	
C812	1-162-964-11	CERAMIC CHIP 0.001uF 10% 50V	
C813	1-162-964-11	CERAMIC CHIP 0.001uF 10% 50V	
C814	1-104-913-11	TANTAL. CHIP 10uF 20% 16V	
C815	1-162-964-11	CERAMIC CHIP 0.001uF 10% 50V	
C816	1-119-751-91	TANTAL. CHIP 22uF 20% 16V	
C817	1-113-991-11	TANTAL. CHIP 33uF 20% 16V	
C819	1-162-964-11	CERAMIC CHIP 0.001uF 10% 50V	
C820	1-162-964-11	CERAMIC CHIP 0.001uF 10% 50V	
C821	1-162-964-11	CERAMIC CHIP 0.001uF 10% 50V	
C822	1-104-913-11	TANTAL. CHIP 10uF 20% 16V	
C823	1-115-566-11	CERAMIC CHIP 4.7uF 10% 10V	
C824	1-115-566-11	CERAMIC CHIP 4.7uF 10% 10V	
C825	1-115-566-11	CERAMIC CHIP 4.7uF 10% 10V	
C826	1-115-566-11	CERAMIC CHIP 4.7uF 10% 10V	
C827	1-164-227-11	CERAMIC CHIP 0.022uF 10% 25V	
C828	1-162-962-11	CERAMIC CHIP 470PF 10% 50V	
C829	1-162-966-11	CERAMIC CHIP 0.0022uF 10% 50V	
C830	1-162-966-11	CERAMIC CHIP 0.0022uF 10% 50V	
C831	1-164-489-11	CERAMIC CHIP 0.22uF 10% 16V	
C832	1-115-566-11	CERAMIC CHIP 4.7uF 10% 10V	
C833	1-162-974-11	CERAMIC CHIP 0.01uF 50V	
C834	1-115-566-11	CERAMIC CHIP 4.7uF 10% 10V	
C836	1-115-566-11	CERAMIC CHIP 4.7uF 10% 10V	
C837	1-115-566-11	CERAMIC CHIP 4.7uF 10% 10V	
C838	1-115-566-11	CERAMIC CHIP 4.7uF 10% 10V	
C840	1-115-566-11	CERAMIC CHIP 4.7uF 10% 10V	
C841	1-135-157-21	TANTALUM CHIP 10uF 20% 6.3V	
C843	1-135-157-21	TANTALUM CHIP 10uF 20% 6.3V	
C844	1-135-157-21	TANTALUM CHIP 10uF 20% 6.3V	
C846	1-135-157-21	TANTALUM CHIP 10uF 20% 6.3V	

Ref. No.	Part No.	Description			Remark
C847	1-164-506-11	CERAMIC CHIP	4.7uF		16V
C848	1-164-506-11	CERAMIC CHIP	4.7uF		16V
C849	1-135-157-21	TANTALUM CHIP	10uF	20%	6.3V
C850	1-135-157-21	TANTALUM CHIP	10uF	20%	6.3V
C851	1-135-157-21	TANTALUM CHIP	10uF	20%	6.3V
C852	1-164-505-11	CERAMIC CHIP	2.2uF		16V
C853	1-165-319-11	CERAMIC CHIP	0.1uF		50V
C854	1-135-157-21	TANTALUM CHIP	10uF	20%	6.3V (TRV93)
C855	1-135-157-21	TANTALUM CHIP	10uF	20%	6.3V
C856	1-109-982-11	CERAMIC CHIP	1uF	10%	10V (TRV65/TRV65PK/TRV85/TRV615/TRV815)
C857	1-135-157-21	TANTALUM CHIP	10uF	20%	6.3V
C860	1-107-826-11	CERAMIC CHIP	0.1uF	10%	16V
C861	1-162-970-11	CERAMIC CHIP	0.01uF	10%	25V (TRV93)
C861	1-165-176-11	CERAMIC CHIP	0.047uF	10%	16V (EXCEPT TRV93)
C862	1-164-227-11	CERAMIC CHIP	0.022uF	10%	25V
C863	1-164-227-11	CERAMIC CHIP	0.022uF	10%	25V
C864	1-113-985-11	TANTAL. CHIP	10uF	20%	20V
C865	1-164-505-11	CERAMIC CHIP	2.2uF		16V
C866	1-164-505-11	CERAMIC CHIP	2.2uF		16V
C867	1-164-346-11	CERAMIC CHIP	1uF		16V (TRV93)
C868	1-135-214-21	TANTAL. CHIP	4.7uF	20%	20V
C869	1-164-505-11	CERAMIC CHIP	2.2uF		16V
C871	1-135-157-21	TANTALUM CHIP	10uF	20%	6.3V
C872	1-164-227-11	CERAMIC CHIP	0.022uF	10%	25V
C873	1-164-227-11	CERAMIC CHIP	0.022uF	10%	25V
C875	1-164-489-11	CERAMIC CHIP	0.22uF	10%	16V
C876	1-107-826-11	CERAMIC CHIP	0.1uF	10%	16V
C877	1-107-826-11	CERAMIC CHIP	0.1uF	10%	16V
		< CONNECTOR >			
* CN801	1-580-756-21	PIN, CONNECTOR 7P			
CN931	1-691-520-11	CONNECTOR, BOARD TO BOARD 48P			
CN932	1-766-346-21	CONNECTOR, FFC/FPC 16P			
CN933	1-778-509-21	PIN, CONNECTOR (PC BOARD) 11P			
CN934	1-766-673-21	CONNECTOR, FFC/FPC 12P			
CN935	1-764-709-11	CONNECTOR, FFC/FPC (LIF) 10P			
		< DIODE >			
D801	8-719-067-36	DIODE	MA3ZD1200LS0		
D802	8-719-067-36	DIODE	MA3ZD1200LS0		
D803	8-719-067-36	DIODE	MA3ZD1200LS0		
D804	8-719-067-36	DIODE	MA3ZD1200LS0		
D805	8-719-067-36	DIODE	MA3ZD1200LS0		
D806	8-719-027-76	DIODE	1SS357-TPH3		
D807	8-719-067-36	DIODE	MA3ZD1200LS0		
D809	8-719-027-77	DIODE	MA796-TX		
D810	8-719-027-76	DIODE	1SS357-TPH3		
D812	8-719-027-76	DIODE	1SS357-TPH3		
D813	8-719-420-14	DIODE	MA8082-TX		
D814	8-719-420-14	DIODE	MA8082-TX		
D815	8-719-420-14	DIODE	MA8082-TX		
D816	8-719-027-76	DIODE	1SS357-TPH3		
D817	8-719-421-27	DIODE	MA728-TX		

Ref. No.	Part No.	Description	Remark
D818	8-719-027-76	DIODE 1SS357-TPH3	
D819	8-719-027-76	DIODE 1SS357-TPH3 (TRV65/TRV65PK/TRV85/TRV615/TRV815)	
D932	8-719-045-87	DIODE MA4Z082WA-(K8).SO	
D933	8-719-045-87	DIODE MA4Z082WA-(K8).SO	
D934	8-719-045-87	DIODE MA4Z082WA-(K8).SO	
D935	8-719-045-87	DIODE MA4Z082WA-(K8).SO	
D936	8-719-045-87	DIODE MA4Z082WA-(K8).SO	
D938	8-719-420-14	DIODE MA8082-TX	
		< FERRITE BEAD >	
FB931	1-414-228-11	FERRITE 0UH	
FB932	1-414-228-11	FERRITE 0UH	
FB933	1-414-228-11	FERRITE 0UH	
FB934	1-414-228-11	FERRITE 0UH	
		< IC >	
IC801	8-759-384-78	IC SN104241PM-TEB	
IC802	8-759-492-30	IC MB3817PFV-G-BND	
		< COIL >	
L804	1-412-056-11	INDUCTOR CHIP 4.7uH	
L805	1-424-674-11	COIL, CHOKE 22uH	
L806	1-409-532-41	COIL, CHOKE 33uH	
L806	1-424-675-11	COIL, CHOKE 33uH	
L807	1-424-674-11	COIL, CHOKE 22uH	
L808	1-424-674-11	COIL, CHOKE 22uH	
L809	1-424-674-11	COIL, CHOKE 22uH	
L810	1-414-396-21	INDUCTOR 4.7uH	
L811	1-414-396-21	INDUCTOR 4.7uH	
L812	1-414-396-21	INDUCTOR 4.7uH	
L813	1-414-396-21	INDUCTOR 4.7uH	
L814	1-414-396-21	INDUCTOR 4.7uH	
L815	1-414-396-21	INDUCTOR 4.7uH	
L816	1-414-396-21	INDUCTOR 4.7uH (TRV93)	
L817	1-414-396-21	INDUCTOR 4.7uH	
L818	1-414-396-21	INDUCTOR 4.7uH	
L819	1-414-400-11	INDUCTOR 22uH	
L820	1-424-674-11	COIL, CHOKE 22uH	
		< FILTER >	
LF801	1-411-957-11	FILTER, COMMON MODE	
		< FUSE, IC LINK >	
⚠ PS801	1-533-760-21	FUSE (SMD) 1.4A (EXCEPT TRV15:E,HK,BR/TRV15PK/TRV25PK/TRV35/TRV15E/TRV15EP/TRV35E)	
⚠ PS801	1-533-761-21	LINK, IC (SMD) 1.4A (TRV15:E,HK,BR/TRV15PK/TRV25PK/TRV35/TRV15E/TRV15EP/TRV35E)	
⚠ PS802	1-533-760-21	FUSE (SMD) 1.4A (EXCEPT TRV15:E,HK,BR/TRV15PK/TRV25PK/TRV35/TRV15E/TRV15EP/TRV35E)	
⚠ PS802	1-533-761-21	LINK, IC (SMD) 1.4A (TRV15:E,HK,BR/TRV15PK/TRV25PK/TRV35/TRV15E/TRV15EP/TRV35E)	
⚠ PS803	1-533-760-21	FUSE (SMD) 1.4A (EXCEPT TRV15:E,HK,BR/TRV15PK/TRV25PK/TRV35/TRV15E/TRV15EP/TRV35E)	

The components identified by mark ⚠ or dotted line with mark ⚠ are critical for safety. Replace only with part number specified.	Les composants identifiés par une marque ⚠ sont critiques pour la sécurité. Ne les remplacer que par une piéce portant le numéro spécifié.

Ref. No.	Part No.	Description	Remark
⚠PS803	1-533-761-21	LINK, IC (SMD) 1.4A (TRV15:E,HK,BR/TRV15PK/TRV25PK/TRV35/TRV15E/TRV15EP/TRV35E)	
⚠PS804	1-533-760-21	FUSE (SMD) 1.4A (EXCEPT TRV15:E,HK,BR/TRV15PK/TRV25PK/TRV35/TRV15E/TRV15EP/TRV35E)	
⚠PS804	1-533-761-21	LINK, IC (SMD) (TRV15:E,HK,BR/TRV15PK/TRV25PK/TRV35/TRV15E/TRV15EP/TRV35E)	
⚠PS805	1-533-760-21	FUSE (SMD) 1.4A (EXCEPT TRV15:E,HK,BR/TRV15PK/TRV25PK/TRV35/TRV15E/TRV15EP/TRV35E)	
⚠PS805	1-533-761-21	LINK, IC (SMD) 1.4A (TRV15:E,HK,BR/TRV15PK/TRV25PK/TRV35/TRV15E/TRV15EP/TRV35E)	
⚠PS806	1-533-760-21	FUSE (SMD) 1.4A (TRV65/TRV65PK/TRV85/TRV93/TRV615/TRV815)	
		< TRANSISTOR >	
Q801	8-729-024-48	TRANSISTOR 2SK1830-TE85L	
Q802	8-729-041-69	TRANSISTOR MMSF5P02HDR2	
Q803	8-729-804-41	TRANSISTOR 2SB1122-ST-TD	
Q804	8-729-037-74	TRANSISTOR UN9213J-(K8).SO	
Q805	8-729-024-48	TRANSISTOR 2SK1830-TE85L	
Q806	8-729-037-74	TRANSISTOR UN9213J-(K8).SO	
Q807	8-729-804-41	TRANSISTOR 2SB1122-ST-TD	
Q808	8-729-043-94	TRANSISTOR CPH3106-TL	
Q809	8-729-043-94	TRANSISTOR CPH3106-TL	
Q810	8-729-043-94	TRANSISTOR CPH3106-TL	
Q812	8-729-041-24	TRANSISTOR NDS355AN	
Q813	8-729-037-53	TRANSISTOR 2SB1462J-QR(K8).SO	
Q814	8-729-043-94	TRANSISTOR CPH3106-TL	
Q815	8-729-043-94	TRANSISTOR CPH3106-TL	
Q817	8-729-041-24	TRANSISTOR NDS355AN	
Q819	8-729-043-94	TRANSISTOR CPH3106-TL	
Q820	8-729-037-74	TRANSISTOR UN9213J-(K8).SO (TRV65/TRV65PK/TRV85/TRV615/TRV815)	
Q823	8-729-037-74	TRANSISTOR UN9213J-(K8).SO	
Q824	8-729-042-56	TRANSISTOR MGSF3455VT1 (TRV65/TRV65PK/TRV85/TRV615/TRV815)	
Q826	8-729-037-74	TRANSISTOR UN9213J-(K8).SO	
Q827	8-729-037-61	TRANSISTOR UN9113J-(K8).SO	
Q828	8-729-037-74	TRANSISTOR UN9213J-(K8).SO	
Q829	8-729-037-53	TRANSISTOR 2SB1462J-QR(K8).SO	
Q830	8-729-037-52	TRANSISTOR 2SD2216J-QR(K8).SO	
Q831	8-729-041-23	TRANSISTOR NDS356AP	
Q832	8-729-041-23	TRANSISTOR NDS356AP	
Q833	8-729-041-23	TRANSISTOR NDS356AP	
Q834	8-729-037-53	TRANSISTOR 2SB1462J-QR(K8).SO	
Q835	8-729-037-52	TRANSISTOR 2SD2216J-QR(K8).SO	
Q836	8-729-037-53	TRANSISTOR 2SB1462J-QR(K8).SO	
Q837	8-729-037-52	TRANSISTOR 2SC4738F-Y/GR(TPL3)(TRV93)	
Q838	8-729-037-53	TRANSISTOR 2SB1462J-QR(K8).SO	
Q839	8-729-037-52	TRANSISTOR 2SD2216J-QR(K8).SO	
Q840	8-729-037-53	TRANSISTOR 2SB1462J-QR(K8).SO	
Q841	8-729-037-53	TRANSISTOR 2SA1832F-Y/GR(TPL3)(TRV93)	
Q842	8-729-037-52	TRANSISTOR 2SD2216J-QR(K8).SO	
Q843	8-729-037-53	TRANSISTOR 2SB1462J-QR(K8).SO	
Q844	8-729-037-53	TRANSISTOR 2SB1462J-QR(K8).SO	
Q845	8-729-037-52	TRANSISTOR 2SD2216J-QR(K8).SO	
Q846	8-729-037-52	TRANSISTOR 2SC4738F-Y/GR(TPL3)(TRV93)	
Q847	8-729-037-52	TRANSISTOR 2SD2216J-QR(K8).SO	
Q848	8-729-037-52	TRANSISTOR 2SD2216J-QR(K8).SO	
Q849	8-729-037-53	TRANSISTOR 2SB1462J-QR(K8).SO	
Q850	8-729-037-52	TRANSISTOR 2SD2216J-QR(K8).SO	
Q851	8-729-041-69	TRANSISTOR MMSF5P02HDR2	
Q852	8-729-017-61	TRANSISTOR 2SB1581-T1	
Q853	8-729-037-53	TRANSISTOR 2SB1462J-QR(K8).SO	
Q854	8-729-037-52	TRANSISTOR 2SD2216J-QR(K8).SO	
Q855	8-729-037-52	TRANSISTOR 2SD2216J-QR(K8).SO	
Q856	8-729-037-52	TRANSISTOR 2SD2216J-QR(K8).SO	
Q932	8-729-037-74	TRANSISTOR UN9213J-(K8).SO	
Q933	8-729-037-74	TRANSISTOR UN9213J-(K8).SO	
Q934	8-729-037-53	TRANSISTOR 2SB1462J-QR(K8).SO	
		< RESISTOR >	
R801	1-216-841-11	METAL CHIP 47K 5% 1/16W	
R802	1-218-893-11	RES,CHIP 82K 0.50% 1/16W	
R803	1-216-833-11	METAL CHIP 10K 5% 1/16W	
R804	1-216-837-11	METAL CHIP 22K 5% 1/16W	
R805	1-216-835-11	METAL CHIP 15K 5% 1/16W	
R806	1-218-879-11	RES,CHIP 22K 0.50% 1/16W	
R807	1-216-839-11	METAL CHIP 33K 5% 1/16W	
R808	1-218-879-11	RES,CHIP 22K 0.50% 1/16W	
R809	1-216-813-11	METAL CHIP 220 5% 1/16W	
R810	1-216-837-11	METAL CHIP 22K 5% 1/16W	
R811	1-218-883-11	RES,CHIP 33K 0.50% 1/16W	
R812	1-218-901-11	RES,CHIP 180K 0.50% 1/16W	
R813	1-216-857-11	METAL CHIP 1M 5% 1/16W	
R814	1-218-879-11	RES,CHIP 22K 0.50% 1/16W	
R815	1-216-813-11	METAL CHIP 220 5% 1/16W	
R816	1-218-879-11	RES,CHIP 22K 0.50% 1/16W	
R817	1-218-879-11	RES,CHIP 22K 0.50% 1/16W	
R818	1-216-813-11	METAL CHIP 220 5% 1/16W	
R819	1-218-887-11	RES,CHIP 47K 0.50% 1/16W	
R820	1-216-845-11	METAL CHIP 100K 5% 1/16W	
R821	1-218-879-11	RES,CHIP 22K 0.50% 1/16W	
R822	1-216-150-91	RES,CHIP 10 5% 1/8W	
R824	1-216-837-11	METAL CHIP 22K 5% 1/16W	
R825	1-218-879-11	RES,CHIP 22K 0.50% 1/16W	
R826	1-216-821-11	METAL CHIP 1K 5% 1/16W	
R827	1-216-821-11	METAL CHIP 1K 5% 1/16W	
R828	1-216-831-11	METAL CHIP 6.8K 5% 1/16W	
R829	1-216-837-11	METAL CHIP 22K 5% 1/16W	
R830	1-218-883-11	RES,CHIP 33K 0.50% 1/16W	
R831	1-216-841-11	METAL CHIP 47K 5% 1/16W	
R832	1-218-879-11	RES,CHIP 22K 0.50% 1/16W	
R833	1-216-839-11	METAL CHIP 33K 5% 1/16W	
R834	1-218-883-11	RES,CHIP 33K 0.50% 1/16W	
R835	1-218-879-11	RES,CHIP 22K 0.50% 1/16W	
R836	1-216-837-11	METAL CHIP 22K 5% 1/16W	
R837	1-216-825-11	METAL CHIP 2.2K 5% 1/16W	
R838	1-216-837-11	METAL CHIP 22K 5% 1/16W	
R839	1-216-837-11	METAL CHIP 22K 5% 1/16W	
R840	1-216-839-11	METAL CHIP 33K 5% 1/16W	
R841	1-216-834-11	METAL CHIP 12K 5% 1/16W	
R842	1-216-849-11	METAL CHIP 220K 5% 1/16W	
R843	1-216-845-11	METAL CHIP 100K 5% 1/16W	
R845	1-216-821-11	METAL CHIP 1K 5% 1/16W	
R849	1-216-837-11	METAL CHIP 22K 5% 1/16W	

Ref. No.	Part No.	Description			Remark
R850	1-216-857-11	METAL CHIP	1M	5%	1/16W
R852	1-216-823-11	METAL CHIP	1.5K	5%	1/16W
R853	1-216-849-11	METAL CHIP	220K	5%	1/16W
R854	1-216-841-11	METAL CHIP	47K	5%	1/16W
R859	1-216-845-11	METAL CHIP	100K	5%	1/16W
		(TRV65/TRV65PK/TRV85/TRV615/TRV815)			
R864	1-216-857-11	METAL CHIP	1M	5%	1/16W
		(TRV65/TRV65PK/TRV85/TRV615/TRV815)			
R865	1-216-841-11	METAL CHIP	47K	5%	1/16W
R866	1-216-837-11	METAL CHIP	22K	5%	1/16W
R867	1-216-296-91	SHORT	0	(TRV93)	
R868	1-216-849-11	METAL CHIP	220K	5%	1/16W
R870	1-216-857-11	METAL CHIP	1M	5%	1/16W
R871	1-216-857-11	METAL CHIP	1M	5%	1/16W
R872	1-216-845-11	METAL CHIP	100K	5%	1/16W
R873	1-216-841-11	METAL CHIP	47K	5%	1/16W
R874	1-216-857-11	METAL CHIP	1M	5%	1/16W
R875	1-216-849-11	METAL CHIP	220K	5%	1/16W
R876	1-216-845-11	METAL CHIP	100K	5%	1/16W
R878	1-216-857-11	METAL CHIP	1M	5%	1/16W
R879	1-216-837-11	METAL CHIP	22K	5%	1/16W
R880	1-218-895-11	RES,CHIP	100K	0.50%	1/16W
R881	1-216-864-11	METAL CHIP	0	5%	1/16W
R882	1-218-903-11	RES,CHIP	220K	0.50%	1/16W
R883	1-216-841-11	METAL CHIP	47K	5%	1/16W
R884	1-216-845-11	METAL CHIP	100K	5%	1/16W
R885	1-216-845-11	METAL CHIP	100K	5%	1/16W
					(TRV93)
R887	1-216-849-11	METAL CHIP	220K	5%	1/16W
R888	1-216-845-11	METAL CHIP	100K	5%	1/16W
R889	1-216-841-11	METAL CHIP	47K	5%	1/16W
					(TRV93)
R890	1-216-845-11	METAL CHIP	100K	5%	1/16W
R891	1-218-895-11	RES,CHIP	100K	0.50%	1/16W
R892	1-218-903-11	RES,CHIP	220K	0.50%	1/16W
R893	1-216-835-11	METAL CHIP	15K	5%	1/16W
R894	1-216-861-11	METAL CHIP	2.2M	5%	1/16W
					(TRV93)
R895	1-216-837-11	METAL CHIP	22K	5%	1/16W
R896	1-218-903-11	RES,CHIP	220K	0.50%	1/16W
R897	1-218-891-11	RES,CHIP	68K	0.50%	1/16W
R898	1-218-895-11	RES,CHIP	100K	0.50%	1/16W
					(TRV93)
R899	1-218-883-11	RES,CHIP	33K	0.50%	1/16W
					(TRV93)
R900	1-218-895-11	RES,CHIP	100K	0.50%	1/16W
R901	1-218-887-11	RES,CHIP	47K	0.50%	1/16W
R902	1-216-864-11	METAL CHIP	0	5%	1/16W
R903	1-216-845-11	METAL CHIP	100K	5%	1/16W
R904	1-216-849-11	METAL CHIP	220K	5%	1/16W
R905	1-218-901-11	RES,CHIP	180K	0.50%	1/16W
R906	1-216-833-11	METAL CHIP	10K	5%	1/16W
R907	1-218-903-11	RES,CHIP	220K	0.50%	1/16W
R908	1-216-841-11	METAL CHIP	47K	5%	1/16W
R910	1-216-833-11	METAL CHIP	10K	5%	1/16W
R911	1-218-883-11	RES,CHIP	33K	0.50%	1/16W
R912	1-218-879-11	RES,CHIP	22K	0.50%	1/16W
R913	1-216-857-11	METAL CHIP	1M	5%	1/16W

Ref. No.	Part No.	Description			Remark
R914	1-216-811-11	METAL CHIP	150	5%	1/16W
R915	1-216-853-11	METAL CHIP	470K	5%	1/16W
R916	1-216-864-11	METAL CHIP	0	5%	1/16W
					(TRV93)
R917	1-216-864-11	METAL CHIP	0	5%	1/16W
					(EXCEPT TRV93)
R918	1-216-849-11	METAL CHIP	220K	5%	1/16W
R921	1-216-296-91	SHORT	0		
R922	1-216-296-91	SHORT	0		
R923	1-216-296-91	SHORT	0		
R924	1-216-849-11	METAL CHIP	220K	5%	1/16W
R932	1-216-841-11	METAL CHIP	47K	5%	1/16W
R933	1-216-821-11	METAL CHIP	1K	5%	1/16W
R934	1-216-821-11	METAL CHIP	1K	5%	1/16W
R935	1-216-821-11	METAL CHIP	1K	5%	1/16W
R936	1-216-821-11	METAL CHIP	1K	5%	1/16W
R937	1-216-821-11	METAL CHIP	1K	5%	1/16W
R938	1-216-821-11	METAL CHIP	1K	5%	1/16W
R939	1-216-821-11	METAL CHIP	1K	5%	1/16W
R940	1-216-819-11	METAL CHIP	680	5%	1/16W
R941	1-216-821-11	METAL CHIP	1K	5%	1/16W
R942	1-216-821-11	METAL CHIP	1K	5%	1/16W
R943	1-216-029-00	METAL CHIP	150	5%	1/10W
		< TRANSFORMER >			
⚠T801	1-429-565-21	TRANSFORMER, CONVERTER			

	1-658-213-11	FP-355 FLEXIBLE PRINT BOARD
		**********
		(Ref.No. 10,000 Series)
		< DIODE >
D001	8-719-988-42	DIODE GL453S

	1-658-214-11	FP-356 FLEXIBLE BOARD
		**********
		(Ref.No. 10,000 Series)
	3-965-551-01	HOLDER (S), SENSOR
	3-965-552-01	HOLDER (T), SENSOR
		< HALL ELEMENT >
H001	8-719-033-37	ELEMENT, HALL HW-105C
H002	8-719-033-37	ELEMENT, HALL HW-105C
		< TRANSISTOR >
Q001	8-729-907-25	PHOTO TRANSISTOR PT4850F
Q002	8-729-907-25	PHOTO TRANSISTOR PT4850F
		< SWITCH >
S001	1-692-614-11	SWITCH, PUSH (3 KEY)
		(Hi8MP,ME/MP,REC PROOF)
S002	1-572-688-11	SWITCH, PUSH (1 KEY)(C.C LOCK)

The components identified by mark ⚠ or dotted line with mark ⚠ are critical for safety. Replace only with part number specified.	Les composants identifiés par une marque ⚠ sont critiques pour la sécurité. Ne les remplacer que par une piéce portant le numéro spécifié.

Ref. No.	Part No.	Description			Remark
		FP-433 FLEXIBLE BOARD			
		**********			
					(Ref.No. 10,000 Series)
		< CAPACITOR >			
C9001	1-164-004-11	CERAMIC CHIP	0.1uF	10%	25V
C9002	1-164-005-11	CERAMIC CHIP	0.47uF		25V
C9003	1-164-360-11	CERAMIC CHIP	0.1uF		16V
		< DIODE >			
D9001	8-719-038-33	DIODE THS120-TE85L			
		< RESISTOR >			
R9001	1-216-789-11	METAL CHIP	2.2	5%	1/16W
R9002	1-216-840-11	METAL CHIP	39K	5%	1/16W
R9003	1-216-857-11	METAL CHIP	1M	5%	1/16W

	A-7073-439-A	LB-54 BOARD, COMPLETE (TRV93)			
		**********			
					(Ref.No. 10,000 Series)
		< CAPACITOR >			
C5351	1-113-642-11	TANTAL. CHIP	47uF	20%	10V
C5352	1-115-566-11	CERAMIC CHIP	4.7uF	10%	10V
C5353	1-162-970-11	CERAMIC CHIP	0.01uF	10%	25V
C5354	1-163-020-00	CERAMIC CHIP	0.0082uF	10%	50V
C5355	1-163-020-00	CERAMIC CHIP	0.0082uF	10%	50V
C5356	1-163-020-00	CERAMIC CHIP	0.0082uF	10%	50V
		< CONNECTOR >			
CN5351	1-784-564-11	CONNECTOR, BOARD TO BOARD 12P			
		< COIL >			
L5351	1-412-031-11	INDUCTOR CHIP	47uH		
L5352	1-412-029-11	INDUCTOR CHIP	10uH		
		< FLUORECENT INDICATOR >			
⚠ND5351	1-517-414-51	FLUORESCENT TUBE (0.55 INCH)			
		< TRANSISTOR >			
Q5351	8-729-039-24	TRANSISTOR FX216-TL1			
		< RESISTOR >			
R5351	1-216-839-11	METAL CHIP	33K	5%	1/16W
		< TRANSFORMER >			
⚠T5351	1-426-848-51	TRANSFORMER, INVERTER			

Ref. No.	Part No.	Description			Remark
	A-7073-445-A	MA-311(VMMI) BOARD, COMPLETE (TRV35)			
		**********			
					(Ref.No. 3,000 Series)
	A-7073-430-A	MA-312(VHI) BOARD, COMPLETE			
		**********			
					(TRV85/TRV815)
	A-7073-455-A	MA-312(VHIB) BOARD, COMPLETE (TRV93)			
		**********			
					(Ref.No. 9,000 Series)
	A-7073-402-A	MA-331(VMM) BOARD, COMPLETE			
		**********			
					(TRV15/TRV15PK/TRV15E/TRV15EP/TRV25/TRV25PK/TRV215)
	A-7073-411-A	MA-331(VHI) BOARD, COMPLETE			
		**********			
					(TRV65/TRV65PK/TRV615)
	A-7073-451-A	MA-331(VMM0) BOARD, COMPLETE (TRV35E)			
		**********			
					(Ref.No. 4,000 Series)
		< CAPACITOR >			
C301	1-107-686-11	TANTAL. CHIP	4.7uF	20%	16V
		(TRV35/TRV65/TRV65PK/TRV85/TRV93/TRV615/TRV815)			
C302	1-107-826-11	CERAMIC CHIP	0.1uF	10%	16V
		(TRV35/TRV65/TRV65PK/TRV85/TRV93/TRV615/TRV815)			
C303	1-107-826-11	CERAMIC CHIP	0.1uF	10%	16V
		(TRV35/TRV65/TRV65PK/TRV85/TRV93/TRV615/TRV815)			
C304	1-107-826-11	CERAMIC CHIP	0.1uF	10%	16V
		(TRV35/TRV65/TRV65PK/TRV85/TRV93/TRV615/TRV815)			
C305	1-107-826-11	CERAMIC CHIP	0.1uF	10%	16V
		(TRV35/TRV65/TRV65PK/TRV85/TRV93/TRV615/TRV815)			
C306	1-135-259-11	TANTAL. CHIP	10uF	20%	6.3V
C321	1-107-725-11	CERAMIC CHIP	0.1uF	10%	16V
		(EXCEPT TRV65/TRV65PK/TRV85/TRV93/TRV615/TRV815)			
C322	1-107-826-11	CERAMIC CHIP	0.1uF	10%	16V
		(EXCEPT TRV65/TRV65PK/TRV85/TRV93/TRV615/TRV815)			
C323	1-162-927-11	CERAMIC CHIP	100PF	5%	50V
		(EXCEPT TRV65/TRV65PK/TRV85/TRV93/TRV615/TRV815)			
C324	1-109-982-11	CERAMIC CHIP	1uF	10%	10V
C325	1-162-970-11	CERAMIC CHIP	0.01uF	10%	25V
C326	1-135-201-11	TANTALUM CHIP	10uF	20%	4V
		(EXCEPT TRV65/TRV65PK/TRV85/TRV93/TRV615/TRV815)			
C327	1-107-826-11	CERAMIC CHIP	0.1uF	10%	16V
		(EXCEPT TRV65/TRV65PK/TRV85/TRV93/TRV615/TRV815)			
C328	1-107-826-11	CERAMIC CHIP	0.1uF	10%	16V
		(EXCEPT TRV65/TRV65PK/TRV85/TRV93/TRV615/TRV815)			
C329	1-162-927-11	CERAMIC CHIP	100PF	5%	50V
		(EXCEPT TRV65/TRV65PK/TRV85/TRV93/TRV615/TRV815)			
C330	1-109-982-11	CERAMIC CHIP	1uF	10%	10V
C331	1-107-826-11	CERAMIC CHIP	0.1uF	10%	16V
		(EXCEPT TRV65/TRV65PK/TRV85/TRV93/TRV615/TRV815)			
C332	1-162-927-11	CERAMIC CHIP	100PF	5%	50V
		(EXCEPT TRV65/TRV65PK/TRV85/TRV93/TRV615/TRV815)			
C333	1-162-927-11	CERAMIC CHIP	100PF	5%	50V
		(TRV65/TRV65PK/TRV85/TRV93/TRV615/TRV815)			
C334	1-107-826-11	CERAMIC CHIP	0.1uF	10%	16V
		(TRV65/TRV65PK/TRV85/TRV93/TRV615/TRV815)			
C335	1-162-970-11	CERAMIC CHIP	0.01uF	10%	25V
		(TRV65/TRV65PK/TRV85/TRV93/TRV615/TRV815)			

The components identified by mark ⚠ or dotted line with mark ⚠ are critical for safety. Replace only with part number specified.	Les composants identifiés par une marque ⚠ sont critiques pour la sécurité. Ne les remplacer que par une piéce portant le numéro spécifié.

Ref. No.	Part No.	Description	Remark
C336	1-162-927-11	CERAMIC CHIP 100PF 5% 50V (TRV65/TRV65PK/TRV85/TRV93/TRV615/TRV815)	
C337	1-135-259-11	TANTAL. CHIP 10uF 20% 6.3V (TRV65/TRV65PK/TRV85/TRV93/TRV615/TRV815)	
C338	1-162-964-11	CERAMIC CHIP 0.001uF 10% 50V (TRV65/TRV65PK/TRV85/TRV93/TRV615/TRV815)	
C339	1-164-227-11	CERAMIC CHIP 0.022uF 10% 25V (TRV65/TRV65PK/TRV85/TRV93/TRV615/TRV815)	
C340	1-162-927-11	CERAMIC CHIP 100PF 5% 50V (TRV65/TRV65PK/TRV85/TRV93/TRV615/TRV815)	
C341	1-110-563-11	CERAMIC CHIP 0.068uF 10% 16V (TRV65/TRV65PK/TRV85/TRV93/TRV615/TRV815)	
C342	1-164-227-11	CERAMIC CHIP 0.022uF 10% 25V (TRV65/TRV65PK/TRV85/TRV93/TRV615/TRV815)	
C343	1-162-970-11	CERAMIC CHIP 0.01uF 10% 25V (TRV65/TRV65PK/TRV85/TRV93/TRV615/TRV815)	
C344	1-164-004-11	CERAMIC CHIP 0.1uF 10% 25V (TRV65/TRV65PK/TRV85/TRV93/TRV615/TRV815)	
C345	1-107-826-11	CERAMIC CHIP 0.1uF 10% 16V (TRV65/TRV65PK/TRV85/TRV93/TRV615/TRV815)	
C346	1-164-227-11	CERAMIC CHIP 0.022uF 10% 25V (TRV65/TRV65PK/TRV85/TRV93/TRV615/TRV815)	
C348	1-164-004-11	CERAMIC CHIP 0.1uF 10% 25V (TRV65/TRV65PK/TRV85/TRV93/TRV615/TRV815)	
C349	1-107-826-11	CERAMIC CHIP 0.1uF 10% 16V (TRV65/TRV65PK/TRV85/TRV93/TRV615/TRV815)	
C350	1-135-259-11	TANTAL. CHIP 10uF 20% 6.3V (TRV65/TRV65PK/TRV85/TRV93/TRV615/TRV815)	
C351	1-164-227-11	CERAMIC CHIP 0.022uF 10% 25V (TRV65/TRV65PK/TRV85/TRV93/TRV615/TRV815)	
C352	1-162-964-11	CERAMIC CHIP 0.001uF 10% 50V (TRV65/TRV65PK/TRV85/TRV93/TRV615/TRV815)	
C353	1-162-927-11	CERAMIC CHIP 100PF 5% 50V (TRV65/TRV65PK/TRV85/TRV93/TRV615/TRV815)	
C354	1-110-563-11	CERAMIC CHIP 0.068uF 10% 16V (TRV65/TRV65PK/TRV85/TRV93/TRV615/TRV815)	
C355	1-164-245-11	CERAMIC CHIP 0.015uF 10% 25V (TRV65/TRV65PK/TRV85/TRV93/TRV615/TRV815)	
C356	1-164-227-11	CERAMIC CHIP 0.022uF 10% 25V (TRV65/TRV65PK/TRV85/TRV93/TRV615/TRV815)	
C357	1-164-245-11	CERAMIC CHIP 0.015uF 10% 25V (TRV65/TRV65PK/TRV85/TRV93/TRV615/TRV815)	
C358	1-164-677-11	CERAMIC CHIP 0.033uF 10% 16V (TRV65/TRV65PK/TRV85/TRV93/TRV615/TRV815)	
C359	1-162-968-11	CERAMIC CHIP 0.0047uF 10% 50V (TRV65/TRV65PK/TRV85/TRV93/TRV615/TRV815)	
C360	1-164-227-11	CERAMIC CHIP 0.022uF 10% 25V (TRV65/TRV65PK/TRV85/TRV93/TRV615/TRV815)	
C361	1-164-227-11	CERAMIC CHIP 0.022uF 10% 25V (TRV65/TRV65PK/TRV85/TRV93/TRV615/TRV815)	
C362	1-164-677-11	CERAMIC CHIP 0.033uF 10% 16V (TRV65/TRV65PK/TRV85/TRV93/TRV615/TRV815)	
C363	1-162-968-11	CERAMIC CHIP 0.0047uF 10% 50V (TRV65/TRV65PK/TRV85/TRV93/TRV615/TRV815)	
C364	1-164-245-11	CERAMIC CHIP 0.015uF 10% 25V (TRV65/TRV65PK/TRV85/TRV93/TRV615/TRV815)	
C365	1-164-227-11	CERAMIC CHIP 0.022uF 10% 25V (TRV65/TRV65PK/TRV85/TRV93/TRV615/TRV815)	
C366	1-164-227-11	CERAMIC CHIP 0.022uF 10% 25V (TRV65/TRV65PK/TRV85/TRV93/TRV615/TRV815)	
C367	1-164-227-11	CERAMIC CHIP 0.022uF 10% 25V (TRV65/TRV65PK/TRV85/TRV93/TRV615/TRV815)	
C368	1-164-245-11	CERAMIC CHIP 0.015uF 10% 25V (TRV65/TRV65PK/TRV85/TRV93/TRV615/TRV815)	
C369	1-162-962-11	CERAMIC CHIP 470PF 10% 50V (TRV65/TRV65PK/TRV85/TRV93/TRV615/TRV815)	
C370	1-162-962-11	CERAMIC CHIP 470PF 10% 50V (TRV65/TRV65PK/TRV85/TRV93/TRV615/TRV815)	
C371	1-164-346-11	CERAMIC CHIP 1uF 16V (TRV65/TRV65PK/TRV85/TRV93/TRV615/TRV815)	
C372	1-164-346-11	CERAMIC CHIP 1uF 16V (TRV65/TRV65PK/TRV85/TRV93/TRV615/TRV815)	
C373	1-164-156-11	CERAMIC CHIP 0.1uF 25V (TRV65/TRV65PK/TRV85/TRV93/TRV615/TRV815)	
C376	1-135-259-11	TANTAL. CHIP 10uF 20% 6.3V	
C377	1-162-966-11	CERAMIC CHIP 0.0022uF 50V	
C378	1-165-128-11	CERAMIC CHIP 0.22uF 16V	
		< CONNECTOR >	
* CN301	1-695-320-21	PIN, CONNECTOR (1.5MM)(SMD) 2P	
* CN302	1-695-320-21	PIN, CONNECTOR (1.5MM)(SMD) 2P (TRV65/TRV65PK/TRV85/TRV93/TRV615/TRV815)	
CN303	1-779-334-11	CONNECTOR, FFC/FPC 20P	
		< DIODE >	
D301	8-719-061-86	DIODE DCR2810 (TRV35/TRV65/TRV65PK/TRV85/TRV93/TRV615/TRV815)	
D302	8-749-060-65	DIODE DCC3810 (EXCEPT TRV15/TRV15PK/TRV15E/TRV15EP/TRV25/TRV25PK/TRV215)	
D303	8-719-061-82	DIODE TLSU1002(TPX1,SONY)	
D305	8-719-404-49	DIODE MA111-TX	
D309	8-719-067-44	DIODE CL-310IRS-X-T (TRV35E)	
D322	8-719-420-14	DIODE MA8082-TX	
D323	8-719-404-49	DIODE MA111-TX	
		< FUSE >	
⚠ F301	1-533-874-11	FUSE, MICRO 200mA, 24V (EXCEPT TRV15/TRV15PKTRV15E/TRV15EP/TRV25/TRV25PK/TRV215)	
		< IC >	
IC301	8-749-012-83	IC RS-180-T	
IC321	8-759-339-63	IC NJM2118V-TE2 (EXCEPT TRV65/TRV65PK/TRV85/TRV93/TRV615/TRV815)	
IC322	8-759-494-54	IC AN2900FH-EB (TRV65/TRV65PK/TRV85/TRV93/TRV615/TRV815)	
		< JACK >	
J301	1-568-027-11	JACK, SMALL TYPE (MIC PLUG IN POWER) (EXCEPT TRV65/TRV65PK/TRV85/TRV93/TRV615/TRV815)	
J301	1-691-737-11	JACK (SMALL TYPE)(HEADPHONE) (TRV65/TRV65PK/TRV85/TRV93/TRV615/TRV815)	
		< COIL >	
L301	1-216-295-91	SHORT 0 (TRV35E)	
L301	1-414-754-11	INDUCTOR 10uH (TRV35/TRV65/TRV65PK/TRV85/TRV93/TRV615/TRV815)	
		< TRANSISTOR >	
Q301	8-729-420-24	TRANSISTOR 2SB1218A-QRS-TX (TRV35/TRV65/TRV65PK/TRV85/TRV93/TRV615/TRV815)	
Q301	8-729-422-51	TRANSISTOR UN5110-QRS-TX (TRV35E)	

The components identified by mark ⚠ or dotted line with mark ⚠ are critical for safety. Replace only with part number specified.	Les composants identifiés par une marque ⚠ sont critiques pour la sécurité. Ne les remplacer que par une piéce portant le numéro spécifié.

Ref. No.	Part No.	Description			Remark
Q302	8-729-122-63	TRANSISTOR 2SA1226-T1E4			
		(TRV35/TRV65/TRV65PK/TRV85/TRV93/TRV615/TRV815)			
Q303	8-729-140-75	TRANSISTOR 2SD999-T1-CLCK			
		(EXCEPT TRV15/TRV15PK/TRV15E/TRV15EP/TRV25/TRV25PK/TRV215)			
Q304	8-729-402-42	TRANSISTOR UN5213-TX			
Q305	8-729-402-42	TRANSISTOR UN5213-TX (TRV35E)			
Q321	8-729-230-63	TRANSISTOR 2SD1819A-QRS-TX			
		(EXCEPT TRV65/TRV65PK/TRV85/TRV93/TRV615/TRV815)			
Q322	8-729-420-24	TRANSISTOR 2SB1218A-QRS-TX			
		(EXCEPT TRV65/TRV65PK/TRV85/TRV93/TRV615/TRV815)			
		< RESISTOR >			
R301	1-216-823-11	METAL CHIP	1.5K	5%	1/16W
		(TRV35/TRV65/TRV65PK/TRV85/TRV93/TRV615/TRV815)			
R302	1-216-810-11	METAL CHIP	120	5%	1/16W
		(TRV35/TRV65/TRV65PK/TRV85/TRV93/TRV615/TRV815)			
R303	1-216-825-11	METAL CHIP	2.2K	5%	1/16W
					(TRV35E)
R304	1-216-309-00	METAL CHIP	5.6	5%	1/10W
					(TRV35E)
R304	1-216-311-00	METAL CHIP	6.8	5%	1/10W
		(TRV35/TRV65/TRV65PK/TRV85/TRV93/TRV615/TRV815)			
R305	1-216-302-00	METAL CHIP	2.7	5%	1/10W
		(EXCEPT TRV15/TRV15PK/TRV15E/TRV15EP/TRV25/TRV25PK/TRV215)			
R306	1-216-864-11	METAL CHIP	0	5%	1/16W
R308	1-216-837-11	METAL CHIP	22K	5%	1/16W
					(TRV93)
R309	1-216-847-11	METAL CHIP	150K	5%	1/16W
					(TRV93)
R310	1-216-824-11	METAL CHIP	1.8K	5%	1/16W
R311	1-216-805-11	METAL CHIP	47	5%	1/16W
R312	1-216-864-11	METAL CHIP	0	5%	1/16W
		(TRV35/TRV65/TRV65PK/TRV85/TRV93/TRV615/TRV815)			
R314	1-216-821-11	METAL CHIP	1K	5%	1/16W
					(TRV35E)
R315	1-216-864-11	METAL CHIP	0	5%	1/16W
		(TRV35/TRV65/TRV65PK/TRV85/TRV93/TRV615/TRV815)			
R321	1-216-864-11	METAL CHIP	0	5%	1/16W
		(TRV65/TRV65PK/TRV85/TRV93/TRV615/TRV815)			
R322	1-216-864-11	METAL CHIP	0	5%	1/16W
R323	1-216-864-11	METAL CHIP	0	5%	1/16W
R324	1-216-864-11	METAL CHIP	0	5%	1/16W
		(TRV65/TRV65PK/TRV85/TRV93/TRV615/TRV815)			
R325	1-216-864-11	METAL CHIP	0	5%	1/16W
		(EXCEPT TRV65/TRV65PK/TRV85/TRV93/TRV615/TRV815)			
R326	1-216-825-11	METAL CHIP	2.2K	5%	1/16W
		(EXCEPT TRV65/TRV65PK/TRV85/TRV93/TRV615/TRV815)			
R327	1-216-837-11	METAL CHIP	22K	5%	1/16W
		(EXCEPT TRV65/TRV65PK/TRV85/TRV93/TRV615/TRV815)			
R328	1-216-837-11	METAL CHIP	22K	5%	1/16W
		(EXCEPT TRV65/TRV65PK/TRV85/TRV93/TRV615/TRV815)			
R329	1-216-829-11	METAL CHIP	4.7K	5%	1/16W
		(EXCEPT TRV65/TRV65PK/TRV85/TRV93/TRV615/TRV815)			
R330	1-216-830-11	METAL CHIP	5.6K	5%	1/16W
		(EXCEPT TRV65/TRV65PK/TRV85/TRV93/TRV615/TRV815)			
R331	1-216-831-11	METAL CHIP	6.8K	5%	1/16W
		(EXCEPT TRV65/TRV65PK/TRV85/TRV93/TRV615/TRV815)			
R332	1-216-809-11	METAL CHIP	100	5%	1/16W
		(EXCEPT TRV65/TRV65PK/TRV85/TRV93/TRV615/TRV815)			
R333	1-216-838-11	METAL CHIP	27K	5%	1/16W
		(EXCEPT TRV65/TRV65PK/TRV85/TRV93/TRV615/TRV815)			
R334	1-216-838-11	METAL CHIP	27K	5%	1/16W
		(EXCEPT TRV65/TRV65PK/TRV85/TRV93/TRV615/TRV815)			

Ref. No.	Part No.	Description			Remark
R335	1-216-839-11	METAL CHIP	33K	5%	1/16W
		(TRV65/TRV65PK/TRV85/TRV93/TRV615/TRV815)			
R336	1-216-836-11	METAL CHIP	18K	5%	1/16W
		(TRV65/TRV65PK/TRV85/TRV93/TRV615/TRV815)			
R337	1-216-835-11	METAL CHIP	15K	5%	1/16W
		(TRV65/TRV65PK/TRV85/TRV93/TRV615/TRV815)			
R338	1-216-835-11	METAL CHIP	15K	5%	1/16W
		(TRV65/TRV65PK/TRV85/TRV93/TRV615/TRV815)			
R339	1-216-831-11	METAL CHIP	6.8K	5%	1/16W
		(TRV65/TRV65PK/TRV85/TRV93/TRV615/TRV815)			
R340	1-216-825-11	METAL CHIP	2.2K	5%	1/16W
		(TRV65/TRV65PK/TRV85/TRV93/TRV615/TRV815)			
R341	1-216-821-11	METAL CHIP	1K	5%	1/16W
		(TRV65/TRV65PK/TRV85/TRV93/TRV615/TRV815)			
R342	1-216-831-11	METAL CHIP	6.8K	5%	1/16W
		(TRV65/TRV65PK/TRV85/TRV93/TRV615/TRV815)			
R343	1-216-829-11	METAL CHIP	4.7K	5%	1/16W
		(TRV65/TRV65PK/TRV85/TRV93/TRV615/TRV815)			
R344	1-216-833-11	METAL CHIP	10K	5%	1/16W
		(TRV65/TRV65PK/TRV85/TRV93/TRV615/TRV815)			
R345	1-216-821-11	METAL CHIP	1K	5%	1/16W
		(TRV65/TRV65PK/TRV85/TRV93/TRV615/TRV815)			
R346	1-216-825-11	METAL CHIP	2.2K	5%	1/16W
		(TRV65/TRV65PK/TRV85/TRV93/TRV615/TRV815)			
R347	1-216-831-11	METAL CHIP	6.8K	5%	1/16W
		(TRV65/TRV65PK/TRV85/TRV93/TRV615/TRV815)			
R348	1-216-831-11	METAL CHIP	6.8K	5%	1/16W
		(TRV65/TRV65PK/TRV85/TRV93/TRV615/TRV815)			
R349	1-216-832-11	METAL CHIP	8.2K	5%	1/16W
		(TRV65/TRV65PK/TRV85/TRV93/TRV615/TRV815)			
R350	1-216-864-11	METAL CHIP	0	5%	1/16W
		(TRV65/TRV65PK/TRV85/TRV93/TRV615/TRV815)			
R351	1-216-838-11	METAL CHIP	27K	5%	1/16W
		(TRV65/TRV65PK/TRV85/TRV93/TRV615/TRV815)			
R352	1-216-839-11	METAL CHIP	33K	5%	1/16W
		(TRV65/TRV65PK/TRV85/TRV93/TRV615/TRV815)			
R353	1-216-839-11	METAL CHIP	33K	5%	1/16W
		(TRV65/TRV65PK/TRV85/TRV93/TRV615/TRV815)			
R354	1-216-829-11	METAL CHIP	4.7K	5%	1/16W
		(TRV65/TRV65PK/TRV85/TRV93/TRV615/TRV815)			
R355	1-216-833-11	METAL CHIP	10K	5%	1/16W
		(TRV65/TRV65PK/TRV85/TRV93/TRV615/TRV815)			
R356	1-216-864-11	METAL CHIP	0	5%	1/16W
		(TRV65/TRV65PK/TRV85/TRV93/TRV615/TRV815)			
R357	1-216-832-11	METAL CHIP	8.2K	5%	1/16W
		(TRV65/TRV65PK/TRV85/TRV93/TRV615/TRV815)			
R358	1-216-838-11	METAL CHIP	27K	5%	1/16W
		(TRV65/TRV65PK/TRV85/TRV93/TRV615/TRV815)			
R359	1-216-835-11	METAL CHIP	15K	5%	1/16W
		(TRV65/TRV65PK/TRV85/TRV93/TRV615/TRV815)			
R360	1-216-835-11	METAL CHIP	15K	5%	1/16W
		(TRV65/TRV65PK/TRV85/TRV93/TRV615/TRV815)			
R361	1-216-835-11	METAL CHIP	15K	5%	1/16W
		(TRV65/TRV65PK/TRV85/TRV93/TRV615/TRV815)			
R362	1-216-835-11	METAL CHIP	15K	5%	1/16W
		(TRV65/TRV65PK/TRV85/TRV93/TRV615/TRV815)			
R363	1-216-830-11	METAL CHIP	5.6K	5%	1/16W
		(TRV65/TRV65PK/TRV85/TRV93/TRV615/TRV815)			
R364	1-216-839-11	METAL CHIP	33K	5%	1/16W
		(TRV65/TRV65PK/TRV85/TRV93/TRV615/TRV815)			
R365	1-216-836-11	METAL CHIP	18K	5%	1/16W
		(TRV65/TRV65PK/TRV85/TRV93/TRV615/TRV815)			
R366	1-216-839-11	METAL CHIP	33K	5%	1/16W
		(TRV65/TRV65PK/TRV85/TRV93/TRV615/TRV815)			

Ref. No.	Part No.	Description			Remark
R367	1-216-818-11	METAL CHIP	560	5%	1/16W
		(TRV65/TRV65PK/TRV85/TRV93/TRV615/TRV815)			
R368	1-216-864-11	METAL CHIP	0	5%	1/16W
		(TRV65/TRV65PK/TRV85/TRV93/TRV615/TRV815)			
		< SWITCH >			
S301	1-692-605-11	SWITCH, SLIDE (VIDEO LIGHT (ON/AUTO/OFF)(TRV93)			
S302	1-771-040-21	SWITCH, PUSH (POWER (VTR/PLAYER))			
S303	1-771-039-11	SWITCH, PUSH (POWER (CAMERA))			
	A-7073-413-A	PD-92(SN6) BOARD, COMPLETE			
		**********			
		(TRV35/TRV65/TRV65PK/TRV615)			
	A-7073-415-A	PD-92(CN6) BOARD, COMPLETE			
		**********			
		(TRV15/TRV15PK/TRV25/TRV25PK/TRV215)			
	A-7073-452-A	PD-92(SP6) BOARD, COMPLETE (TRV35E)			
		**********			
	A-7073-460-A	PD-92(CP6) BOARD, COMPLETE			
		**********			
		(TRV15E/TRV15EP)			
		(Ref.No. 10,000 Series)			
		< CAPACITOR >			
C5501	1-107-826-11	CERAMIC CHIP	0.1uF	10%	16V
C5502	1-107-826-11	CERAMIC CHIP	0.1uF	10%	16V
C5503	1-162-970-11	CERAMIC CHIP	0.01uF	10%	25V
C5504	1-162-970-11	CERAMIC CHIP	0.01uF	10%	25V
C5505	1-162-970-11	CERAMIC CHIP	0.01uF	10%	25V
C5506	1-164-004-11	CERAMIC CHIP	0.1uF	10%	25V
C5507	1-104-851-11	TANTAL. CHIP	10uF	20%	10V
C5508	1-107-826-11	CERAMIC CHIP	0.1uF	10%	16V
C5509	1-135-180-21	TANTALUM CHIP	3.3uF	20%	6.3V
C5511	1-109-982-11	CERAMIC CHIP	1uF	10%	10V
C5512	1-104-851-11	TANTAL. CHIP	10uF	20%	10V
C5513	1-107-826-11	CERAMIC CHIP	0.1uF	10%	16V
C5514	1-110-501-11	CERAMIC CHIP	0.33uF	10%	16V
		(TRV15/TRV15PK/TRV15E/TRV15EP/TRV25/TRV25PK/TRV215)			
C5514	1-115-339-11	CERAMIC CHIP	0.1uF	10%	50V
		(TRV35/TRV35E/TRV65/TRV65PK/TRV615)			
C5515	1-110-501-11	CERAMIC CHIP	0.33uF	10%	16V
		(TRV15/TRV15PK/TRV15E/TRV15EP/TRV25/TRV25PK/TRV215)			
C5515	1-115-339-11	CERAMIC CHIP	0.1uF	10%	50V
		(TRV35/TRV35E/TRV65/TRV65PK/TRV615)			
C5516	1-110-501-11	CERAMIC CHIP	0.33uF	10%	16V
		(TRV15/TRV15PK/TRV15E/TRV15EP/TRV25/TRV25PK/TRV215)			
C5516	1-115-339-11	CERAMIC CHIP	0.1uF	10%	50V
		(TRV35/TRV35E/TRV65/TRV65PK/TRV615)			
C5517	1-107-826-11	CERAMIC CHIP	0.1uF	10%	16V
C5518	1-109-982-11	CERAMIC CHIP	1uF	10%	10V
C5519	1-104-851-11	TANTAL. CHIP	10uF	20%	10V
C5520	1-107-826-11	CERAMIC CHIP	0.1uF	10%	16V
C5601	1-135-259-11	TANTAL. CHIP	10uF	20%	6.3V
		(TRV15/TRV15PK/TRV15E/TRV15EP/TRV25/TRV25PK/TRV215)			
C5602	1-107-687-11	TANTAL. CHIP	3.3uF	20%	20V
C5603	1-110-501-11	CERAMIC CHIP	0.33uF	10%	16V
		(TRV15/TRV15PK/TRV15E/TRV15EP/TRV25/TRV25PK/TRV215)			

Ref. No.	Part No.	Description			Remark
C5603	1-164-004-11	CERAMIC CHIP	0.1uF	10%	25V
		(TRV35/TRV35E/TRV65/TRV65PK/TRV615)			
C5604	1-107-826-11	CERAMIC CHIP	0.1uF	10%	16V
C5605	1-107-826-11	CERAMIC CHIP	0.1uF	10%	16V
C5607	1-164-004-11	CERAMIC CHIP	0.1uF	10%	25V
C5608	1-164-357-11	CERAMIC CHIP	1000PF	5%	50V
C5610	1-162-926-11	CERAMIC CHIP	82PF	5%	50V
C5612	1-162-926-11	CERAMIC CHIP	82PF	5%	50V
C5614	1-162-959-11	CERAMIC CHIP	330PF	5%	50V
		(TRV35TRV35E/TRV65/TRV65PK/TRV615)			
C5615	1-162-957-11	CERAMIC CHIP	220PF	5%	50V
		(TRV35/TRV35E/TRV65/TRV65PK/TRV615)			
C5616	1-107-682-11	CERAMIC CHIP	1uF	10%	16V
C5618	1-113-994-11	TANTAL. CHIP	6.8uF	20%	16V
		(TRV35/TRV35E/TRV65/TRV65PK/TRV615)			
C5619	1-162-970-11	CERAMIC CHIP	0.01uF	10%	25V
		(TRV35/TRV35E/TRV65/TRV65PK/TRV615)			
C5620	1-107-826-11	CERAMIC CHIP	0.1uF	10%	16V
C5621	1-135-177-21	TANTALUM CHIP	1uF	20%	20V
C5622	1-107-682-11	CERAMIC CHIP	1uF	10%	16V
C5623	1-107-826-11	CERAMIC CHIP	0.1uF	10%	16V
		(TRV15/TRV15PK/TRV15E/TRV15EP/TRV25/TRV25PK/TRV215)			
C5624	1-107-688-11	TANTAL. CHIP	1.5uF	20%	10V
C5625	1-107-688-11	TANTAL. CHIP	1.5uF	20%	10V
C5633	1-162-967-11	CERAMIC CHIP	0.0033uF	10%	50V
C5701	1-104-911-11	TANTAL. CHIP	33uF	20%	10V
C5702	1-164-346-11	CERAMIC CHIP	1uF		16V
C5703	1-164-664-11	CERAMIC CHIP	0.033uF	10%	50V
C5704	1-164-004-11	CERAMIC CHIP	0.1uF	10%	25V
⚠C5705	1-113-521-11	CERAMIC CHIP	12PF	10%	3KV
C5706	1-162-970-11	CERAMIC CHIP	0.01uF	10%	25V
C5801	1-162-970-11	CERAMIC CHIP	0.01uF	10%	25V
		< CONNECTOR >			
* CN5501	1-573-984-11	CONNECTOR, BOARD TO BOARD 10P			
CN5601	1-691-362-11	CONNECTOR, FFC/FPC (ZIF) 24P			
CN5701	1-764-709-11	CONNECTOR, FFC/FPC (LIF) 10P			
CN5801	1-750-360-21	CONNECTOR, FFC/FPC (ZIF) 24P			
CN5802	1-778-509-21	PIN, CONNECTOR (PC BOARD) 11P			
CN5803	1-778-508-21	PIN, CONNECTOR (PC BOARD) 6P			
CN5804	1-779-064-11	PIN, CONNECTOR (PC BOARD) 12P			
CN5805	1-766-336-21	CONNECTOR, FFC/FPC 6P			
		< DIODE >			
D5603	8-713-102-80	DIODE 1T369-01-T8A			
D5604	8-719-976-96	DIODE MA8047-H-TX			
D5605	8-713-102-80	DIODE 1T369-01-T8A			
D5703	8-719-058-86	DIODE PG1101H-TR			
D5704	8-719-404-49	DIODE MA111-TX			
		< IC >			
IC5501	8-759-364-05	IC M62376GP-65AD			
IC5502	8-759-486-77	IC IR3Y37M4			
IC5601	8-759-491-12	IC CM7017L2-T4			
		(TRV15/TRV15E/TRV15EP/TRV25/TRV215:US)			
IC5601	8-759-495-00	IC LZ9GH184			
		(TRV35/TRV35E/TRV65/TRV65PK/TRV615)			
IC5601	8-759-530-20	IC CM7017L3-T4			
		(TRV15PK/TRV25PK/TRV215:CND)			

The components identified by mark ⚠ or dotted line with mark ⚠ are critical for safety. Replace only with part number specified.	Les composants identifiés par une marque ⚠ sont critiques pour la sécurité. Ne les remplacer que par une piéce portant le numéro spécifié.

Ref. No.	Part No.	Description			Remark
IC5602	8-759-327-01	IC NJM062V(TE2)			
IC5701	8-759-075-70	IC TA75S393F-TE85R			
IC5801	8-759-494-53	IC BU9729K-E2			
		< COIL >			
L5501	1-414-754-11	INDUCTOR	10uH		
L5502	1-414-754-11	INDUCTOR	10uH		
L5503	1-414-754-11	INDUCTOR	10uH		
L5601	1-414-754-11	INDUCTOR	10uH		
	(TRV15/TRV15PK/TRV15E/TRV15EP/TRV25/TRV25PK/TRV215)				
L5603	1-414-754-11	INDUCTOR	10uH		
L5604	1-414-754-11	INDUCTOR	10uH		
L5605	1-412-957-11	INDUCTOR	33uH		
L5701	1-409-536-41	COIL, CHOKE	150uH		
		< TRANSISTOR >			
Q5501	8-729-420-24	TRANSISTOR	2SB1218A-QRS-TX		
Q5601	8-729-402-42	TRANSISTOR	UN5213-TX		
Q5602	8-729-402-42	TRANSISTOR	UN5213-TX		
Q5604	8-729-230-63	TRANSISTOR	2SD1819A-QRS-TX		
	(TRV35/TRV35E/TRV65/TRV65PK/TRV615)				
Q5605	8-729-230-63	TRANSISTOR	2SD1819A-QRS-TX		
Q5606	8-729-420-24	TRANSISTOR	2SB1218A-QRS-TX		
Q5607	8-729-230-63	TRANSISTOR	2SD1819A-QRS-TX		
Q5608	8-729-420-24	TRANSISTOR	2SB1218A-QRS-TX		
Q5701	8-729-039-43	TRANSISTOR	FP216-TL		
Q5702	8-729-015-74	TRANSISTOR	UN5111-TX		
		< RESISTOR >			
R5501	1-216-840-11	METAL CHIP	39K	5%	1/16W
R5505	1-216-841-11	METAL CHIP	47K	5%	1/16W
R5512	1-216-837-11	METAL CHIP	22K	5%	1/16W
R5513	1-216-834-11	METAL CHIP	12K	5%	1/16W
R5516	1-216-837-11	METAL CHIP	22K	5%	1/16W
R5517	1-216-835-11	METAL CHIP	15K	5%	1/16W
R5518	1-216-839-11	METAL CHIP	33K	5%	1/16W
R5520	1-216-852-11	METAL CHIP	390K	5%	1/16W
R5521	1-216-834-11	METAL CHIP	12K	5%	1/16W
R5522	1-216-840-11	METAL CHIP	39K	5%	1/16W
	(TRV35/TRV35E/TRV65/TRV65PK/TRV615)				
R5522	1-216-843-11	METAL CHIP	68K	5%	1/16W
	(TRV15/TRV15PK/TRV15E/TRV15EP/TRV25/TRV25PK/TRV215)				
R5528	1-218-895-11	RES,CHIP	100K	0.50%	1/16W
R5531	1-216-821-11	METAL CHIP	1K	5%	1/16W
R5532	1-216-841-11	METAL CHIP	47K	5%	1/16W
R5533	1-216-864-11	METAL CHIP	0	5%	1/16W
R5537	1-216-823-11	METAL CHIP	1.5K	5%	1/16W
	(TRV15/TRV15PK/TRV25/TRV25PK/TRV215)				
R5537	1-216-828-11	METAL CHIP	3.9K	5%	1/16W
	(TRV15E/TRV15EP)				
R5537	1-216-830-11	METAL CHIP	5.6K	5%	1/16W
	(TRV35/TRV65/TRV65PK/TRV615)				
R5537	1-216-832-11	METAL CHIP	8.2K	5%	1/16W
	(TRV35E)				
R5541	1-216-825-11	METAL CHIP	2.2K	5%	1/16W
R5542	1-216-824-11	METAL CHIP	1.8K	5%	1/16W
R5544	1-216-821-11	METAL CHIP	1K	5%	1/16W
R5602	1-216-864-11	METAL CHIP	0	5%	1/16W
	(TRV15/TRV15PK/TRV15E/TRV15EP/TRV25/TRV25PK/TRV215)				
R5603	1-216-864-11	METAL CHIP	0	5%	1/16W
R5604	1-216-864-11	METAL CHIP	0	5%	1/16W

Ref. No.	Part No.	Description			Remark
R5605	1-216-864-11	METAL CHIP	0	5%	1/16W
	(TRV15/TRV15PK/TRV15E/TRV15EP/TRV25/TRV25PK/TRV215)				
R5607	1-216-864-11	METAL CHIP	0	5%	1/16W
	(TRV35/TRV35E/TRV65/TRV65PK/TRV615)				
R5608	1-216-864-11	METAL CHIP	0	5%	1/16W
	(TRV35/TRV35E/TRV65/TRV65PK/TRV615)				
R5610	1-216-842-11	METAL CHIP	56K	5%	1/16W
	(TRV15/TRV15PK/TRV15E/TRV15EP/TRV25/TRV25PK/TRV215)				
R5610	1-216-845-11	METAL CHIP	100K	5%	1/16W
	(TRV35/TRV35E/TRV65/TRV65PK/TRV615)				
R5612	1-216-833-11	METAL CHIP	10K	5%	1/16W
R5613	1-216-841-11	METAL CHIP	47K	5%	1/16W
R5615	1-216-839-11	METAL CHIP	33K	5%	1/16W
R5616	1-216-857-11	METAL CHIP	1M	5%	1/16W
R5617	1-216-833-11	METAL CHIP	10K	5%	1/16W
R5621	1-216-857-11	METAL CHIP	1M	5%	1/16W
	(TRV35/TRV35E/TRV65/TRV65PK/TRV615)				
R5622	1-216-864-11	METAL CHIP	0	5%	1/16W
R5625	1-218-891-11	RES,CHIP	68K	0.50%	1/16W
	(TRV15/TRV15PK/TRV15E/TRV15EP/TRV25/TRV25PK/TRV215)				
R5625	1-218-895-11	RES,CHIP	100K	0.50%	1/16W
	(TRV35/TRV35E/TRV65/TRV65PK/TRV615)				
R5627	1-218-895-11	RES,CHIP	100K	0.50%	1/16W
	(TRV15/TRV15PK/TRV15E/TRV15EP/TRV25/TRV25PK/TRV215)				
R5627	1-218-901-11	RES,CHIP	180K	0.50%	1/16W
	(TRV35/TRV35E/TRV65/TRV65PK/TRV615)				
R5628	1-216-864-11	METAL CHIP	0	5%	1/16W
R5629	1-216-833-11	METAL CHIP	10K	5%	1/16W
R5630	1-216-821-11	METAL CHIP	1K	5%	1/16W
R5632	1-216-864-11	METAL CHIP	0	5%	1/16W
	(TRV35/TRV35E/TRV65/TRV65PK/TRV615)				
R5636	1-216-864-11	METAL CHIP	0	5%	1/16W
	(TRV15/TRV15PK/TRV15E/TRV15EP/TRV25/TRV25PK/TRV215)				
R5635	1-216-829-11	METAL CHIP	4.7K	5%	1/16W
	(TRV35/TRV35E/TRV65/TRV65PK/TRV615)				
R5636	1-216-837-11	METAL CHIP	22K	5%	1/16W
	(TRV35/TRV35E/TRV65/TRV65PK/TRV615)				
R5637	1-216-864-11	METAL CHIP	0	5%	1/16W
	(TRV35/TRV35E/TRV65/TRV65PK/TRV615)				
R5638	1-216-833-11	METAL CHIP	10K	5%	1/16W
	(TRV35/TRV35E/TRV65/TRV65PK/TRV615)				
R5639	1-216-833-11	METAL CHIP	10K	5%	1/16W
	(TRV35/TRV35E/TRV65/TRV65PK/TRV615)				
R5640	1-216-845-11	METAL CHIP	100K	5%	1/16W
R5641	1-216-839-11	METAL CHIP	33K	5%	1/16W
R5642	1-216-829-11	METAL CHIP	4.7K	5%	1/16W
	(TRV35/TRV35E/TRV65/TRV65PK/TRV615)				
R5643	1-216-845-11	METAL CHIP	100K	5%	1/16W
R5644	1-216-839-11	METAL CHIP	33K	5%	1/16W
R5645	1-216-844-11	METAL CHIP	82K	5%	1/16W
	(TRV35/TRV35E/TRV65/TRV65PK/TRV615)				
R5646	1-216-844-11	METAL CHIP	82K	5%	1/16W
	(TRV35/TRV35E/TRV65/TRV65PK/TRV615)				
R5647	1-216-864-11	METAL CHIP	0	5%	1/16W
	(TRV15/TRV15PK/TRV15E/TRV15EP/TRV25/TRV25PK/TRV215)				
R5648	1-216-864-11	METAL CHIP	0	5%	1/16W
	(TRV15/TRV15PK/TRV15E/TRV15EP/TRV25/TRV25PK/TRV215)				
R5651	1-218-883-11	RES,CHIP	33K	0.50%	1/16W
	(TRV35/TRV35E/TRV65/TRV65PK/TRV615)				
R5652	1-216-864-11	METAL CHIP	0	5%	1/16W
	(TRV15/TRV15PK/TRV15E/TRV15EP/TRV25/TRV25PK/TRV215)				
R5652	1-218-879-11	RES,CHIP	22K	0.50%	1/16W
	(TRV35/TRV35E/TRV65/TRV65PK/TRV615)				

Ref. No.	Part No.	Description			Remark
R5653	1-218-883-11	RES,CHIP	33K	0.50%	1/16W
		(TRV35/TRV35E/TRV65/TRV65PK/TRV615)			
R5654	1-218-879-11	RES,CHIP	22K	0.50%	1/16W
		(TRV35/TRV35E/TRV65/TRV65PK/TRV615)			
R5657	1-216-864-11	METAL CHIP	0	5%	1/16W
		(TRV35/TRV35E/TRV65/TRV65PK/TRV615)			
R5658	1-216-864-11	METAL CHIP	0	5%	1/16W
		(TRV35/TRV35E/TRV65/TRV65PK/TRV615)			
R5659	1-216-864-11	METAL CHIP	0	5%	1/16W
		(TRV35/TRV35E/TRV65/TRV65PK/TRV615)			
R5660	1-216-864-11	METAL CHIP	0	5%	1/16W
		(TRV35/TRV35E/TRV65/TRV65PK/TRV615)			
R5661	1-216-864-11	METAL CHIP	0	5%	1/16W
		(TRV35/TRV35E/TRV65/TRV65PK/TRV615)			
R5663	1-216-864-11	METAL CHIP	0	5%	1/16W
		(TRV15/TRV15PK/TRV15E/TRV15EP/TRV25/TRV25PK/TRV215)			
R5664	1-216-864-11	METAL CHIP	0	5%	1/16W
		(TRV15/TRV15PK/TRV15E/TRV15EP/TRV25/TRV25PK/TRV215)			
R5665	1-216-864-11	METAL CHIP	0	5%	1/16W
		(TRV15/TRV15PK/TRV15E/TRV15EP/TRV25/TRV25PK/TRV215)			
R5666	1-216-864-11	METAL CHIP	0	5%	1/16W
		(TRV15/TRV15PK/TRV15E/TRV15EP/TRV25/TRV25PK/TRV215)			
R5667	1-216-864-11	METAL CHIP	0	5%	1/16W
		(TRV15/TRV15PK/TRV15E/TRV15EP/TRV25/TRV25PK/TRV215)			
R5668	1-216-864-11	METAL CHIP	0	5%	1/16W
		(TRV15/TRV15PK/TRV15E/TRV15EP/TRV25/TRV25PK/TRV215)			
R5669	1-216-864-11	METAL CHIP	0	5%	1/16W
		(TRV35/TRV35E/TRV65/TRV65PK/TRV615)			
R5670	1-216-864-11	METAL CHIP	0	5%	1/16W
		(TRV35/TRV35E/TRV65/TRV65PK/TRV615)			
R5671	1-216-864-11	METAL CHIP	0	5%	1/16W
		(TRV35/TRV35E/TRV65/TRV65PK/TRV615)			
R5672	1-216-849-11	METAL CHIP	220K	5%	1/16W
		(TRV15/TRV15PK/TRV15E/TRV15EP/TRV25/TRV25PK/TRV215)			
R5673	1-216-864-11	METAL CHIP	0	5%	1/16W
		(TRV15/TRV15PK/TRV15E/TRV15EP/TRV25/TRV25PK/TRV215)			
R5674	1-216-864-11	METAL CHIP	0	5%	1/16W
		(TRV35/TRV35PK/TRV35E/TRV65/TRV65PK/TRV315/TRV615)			
R5676	1-216-864-11	METAL CHIP	0	5%	1/16W
		(TRV35/TRV35E/TRV65/TRV65PK/TRV615)			
R5678	1-216-864-11	METAL CHIP	0	5%	1/16W
		(TRV15/TRV15PK/TRV15E/TRV15EP/TRV25/TRV25PK/TRV215)			
R5679	1-216-805-11	METAL CHIP	47	5%	1/16W
		(TRV35/TRV35E/TRV65/TRV65PK/TRV615)			
R5680	1-216-805-11	METAL CHIP	47	5%	1/16W
		(TRV35/TRV35E/TRV65/TRV65PK/TRV615)			
R5681	1-216-805-11	METAL CHIP	47	5%	1/16W
		(TRV35/TRV35E/TRV65/TRV65PK/TRV615)			
R5682	1-216-805-11	METAL CHIP	47	5%	1/16W
		(TRV15/TRV15PK/TRV15E/TRV15EP/TRV25/TRV25PK/TRV215)			
R5683	1-216-805-11	METAL CHIP	47	5%	1/16W
		(TRV15/TRV15PK/TRV15E/TRV15EP/TRV25/TRV25PK/TRV215)			
R5684	1-216-805-11	METAL CHIP	47	5%	1/16W
		(TRV15/TRV15PK/TRV15E/TRV15EP/TRV25/TRV25PK/TRV215)			
R5685	1-216-845-11	METAL CHIP	100K	5%	1/16W
R5686	1-216-845-11	METAL CHIP	100K	5%	1/16W
R5688	1-216-864-11	METAL CHIP	0	5%	1/16W
R5692	1-216-837-11	METAL CHIP	22K	5%	1/16W
		(TRV35/TRV35E/TRV65/TRV65PK/TRV615)			
R5692	1-216-841-11	METAL CHIP	47K	5%	1/16W
		(TRV15/TRV15PK/TRV15E/TRV15EP/TRV25/TRV25PK/TRV215)			
R5693	1-216-848-11	METAL CHIP	180K	5%	1/16W
		(TRV35/TRV35E/TRV65/TRV65PK/TRV615)			

Ref. No.	Part No.	Description			Remark
R5693	1-216-853-11	METAL CHIP	470K	5%	1/16W
		(TRV15/TRV15PK/TRV15E/TRV15EP/TRV25/TRV25PK/TRV215)			
R5694	1-216-839-11	METAL CHIP	33K	5%	1/16W
R5695	1-216-833-11	METAL CHIP	10K	5%	1/16W
R5696	1-216-864-11	METAL CHIP	0	5%	1/16W
		(TRV35/TRV35E/TRV65/TRV65PK/TRV615)			
R5697	1-216-864-11	METAL CHIP	0	5%	1/16W
		(TRV15/TRV15PK/TRV15E/TRV15EP/TRV25/TRV25PK/TRV215)			
R5698	1-216-864-11	METAL CHIP	0	5%	1/16W
		(TRV15/TRV15PK/TRV15E/TRV15EP/TRV25/TRV25PK/TRV215)			
R5703	1-216-055-00	METAL CHIP	1.8K	5%	1/10W
R5704	1-216-055-00	METAL CHIP	1.8K	5%	1/10W
R5705	1-216-845-11	METAL CHIP	100K	5%	1/16W
R5706	1-216-831-11	METAL CHIP	6.8K	5%	1/16W
R5707	1-216-837-11	METAL CHIP	22K	5%	1/16W
R5708	1-216-810-11	METAL CHIP	120	5%	1/16W
R5709	1-216-817-11	METAL CHIP	470	5%	1/16W
R5710	1-216-864-11	METAL CHIP	0	5%	1/16W
R5801	1-216-823-11	METAL CHIP	1.5K	5%	1/16W
R5802	1-216-825-11	METAL CHIP	2.2K	5%	1/16W
R5803	1-216-828-11	METAL CHIP	3.9K	5%	1/16W
R5804	1-216-832-11	METAL CHIP	8.2K	5%	1/16W
R5805	1-216-838-11	METAL CHIP	27K	5%	1/16W
R5806	1-216-822-11	METAL CHIP	1.2K	5%	1/16W
R5807	1-216-809-11	METAL CHIP	100	5%	1/16W
R5808	1-216-809-11	METAL CHIP	100	5%	1/16W
R5811	1-216-864-11	METAL CHIP	0	5%	1/16W
R5812	1-216-855-11	METAL CHIP	680K	5%	1/16W
		< SWITCH >			
S5801	1-692-088-41	SWITCH, TACTILE (LCD BRIGHT +)			
S5802	1-692-088-41	SWITCH, TACTILE (LID BRIGHT -)			
S5803	1-692-088-41	SWITCH, TACTILE (VOLUME +)			
S5804	1-692-088-41	SWITCH, TACTILE (VOLUME -)			
		< TRANSFORMER >			
⚠T5701	1-429-547-31	TRANSFORMER, INVERTER			

	A-7073-432-A	PD-93(CN3.5) BOARD, COMPLETE			
		**********			
		(TRV85/TRV815)			
	A-7073-457-A	PD-93(SN3) BOARD, COMPLETE (TRV93)			
		**********			
		(Ref.No. 10,000 Series)			
		< CAPACITOR >			
C4501	1-107-826-11	CERAMIC CHIP	0.1uF	10%	16V
C4502	1-107-826-11	CERAMIC CHIP	0.1uF	10%	16V
C4503	1-162-970-11	CERAMIC CHIP	0.01uF	10%	25V
C4504	1-162-970-11	CERAMIC CHIP	0.01uF	10%	25V
C4505	1-162-970-11	CERAMIC CHIP	0.01uF	10%	25V
C4506	1-164-004-11	CERAMIC CHIP	0.1uF	10%	25V
C4507	1-104-851-11	TANTAL. CHIP	10uF	20%	10V
C4508	1-107-826-11	CERAMIC CHIP	0.1uF	10%	16V
C4509	1-135-180-21	TANTALUM CHIP	3.3uF	20%	6.3V
C4511	1-107-682-11	CERAMIC CHIP	1uF	10%	16V

The components identified by mark ⚠ or dotted line with mark ⚠ are critical for safety. Replace only with part number specified.	Les composants identifiés par une marque ⚠ sont critiques pour la sécurité. Ne les remplacer que par une piéce portant le numéro spécifié.

Ref. No.	Part No.	Description			Remark
C4512	1-104-851-11	TANTAL. CHIP	10uF	20%	10V
C4513	1-107-826-11	CERAMIC CHIP	0.1uF	10%	16V
C4514	1-164-004-11	CERAMIC CHIP	0.1uF	10%	25V
C4515	1-164-004-11	CERAMIC CHIP	0.1uF	10%	25V
C4516	1-164-004-11	CERAMIC CHIP	0.1uF	10%	25V
C4517	1-107-826-11	CERAMIC CHIP	0.1uF	10%	16V
C4518	1-109-982-11	CERAMIC CHIP	1uF	10%	10V
C4519	1-104-851-11	TANTAL. CHIP	10uF	20%	10V
C4520	1-107-826-11	CERAMIC CHIP	0.1uF	10%	16V
C4602	1-107-687-11	TANTAL. CHIP	3.3uF	20%	20V
C4603	1-110-501-11	CERAMIC CHIP	0.33uF	10%	16V (TRV85/TRV815)
C4603	1-164-004-11	CERAMIC CHIP	0.1uF	10%	25V (TRV93)
C4604	1-107-826-11	CERAMIC CHIP	0.1uF	10%	16V
C4605	1-107-826-11	CERAMIC CHIP	0.1uF	10%	16V
C4607	1-164-004-11	CERAMIC CHIP	0.1uF	10%	25V
C4608	1-164-357-11	CERAMIC CHIP	1000PF	5%	50V
C4610	1-162-926-11	CERAMIC CHIP	82PF	5%	50V
C4612	1-162-926-11	CERAMIC CHIP	82PF	5%	50V
C4614	1-162-959-11	CERAMIC CHIP	330PF	5%	50V (TRV93)
C4615	1-162-957-11	CERAMIC CHIP	220PF	5%	50V (TRV93)
C4616	1-107-682-11	CERAMIC CHIP	1uF	10%	16V
C4618	1-113-994-11	TANTAL. CHIP	6.8uF	20%	16V (TRV93)
C4619	1-162-970-11	CERAMIC CHIP	0.01uF	10%	25V (TRV93)
C4620	1-162-970-11	CERAMIC CHIP	0.01uF	10%	25V
C4621	1-135-177-21	TANTALUM CHIP	1uF	20%	20V
C4622	1-107-682-11	CERAMIC CHIP	1uF	10%	16V
C4623	1-107-826-11	CERAMIC CHIP	0.1uF	10%	16V
C4624	1-107-688-11	TANTAL. CHIP	1.5uF	20%	10V
C4625	1-107-688-11	TANTAL. CHIP	1.5uF	20%	10V
C4633	1-162-967-11	CERAMIC CHIP	0.0033uF	10%	50V
C4701	1-104-911-11	TANTAL. CHIP	33uF	20%	10V
C4702	1-164-346-11	CERAMIC CHIP	1uF		16V
C4703	1-164-664-11	CERAMIC CHIP	0.033uF	10%	50V
C4704	1-164-004-11	CERAMIC CHIP	0.1uF	10%	25V
⚠C4705	1-113-520-11	CERAMIC CHIP	10PF	10%	3KV (TRV93)
⚠C4705	1-113-521-11	CERAMIC CHIP	12PF	10%	3KV (TRV85/TRV815)
C4706	1-162-970-11	CERAMIC CHIP	0.01uF	10%	25V
C4801	1-162-970-11	CERAMIC CHIP	0.01uF	10%	25V
		< CONNECTOR >			
* CN4501	1-573-984-11	CONNECTOR, BOARD TO BOARD 10P			
CN4601	1-691-362-11	CONNECTOR, FFC/FPC (ZIF) 24P			
CN4701	1-764-709-11	CONNECTOR, FFC/FPC (LIF) 10P			
CN4801	1-750-360-21	CONNECTOR, FFC/FPC (ZIF) 24P			
CN4802	1-778-509-21	PIN, CONNECTOR (PC BOARD) 11P			
CN4803	1-778-508-21	PIN, CONNECTOR (PC BOARD) 6P			
CN4804	1-779-064-11	PIN, CONNECTOR (PC BOARD) 12P			
CN4805	1-766-336-21	CONNECTOR, FFC/FPC 6P			

Ref. No.	Part No.	Description			Remark
		< DIODE >			
D4603	8-713-102-80	DIODE 1T369-01-T8A			
D4604	8-719-976-96	DIODE MA8047-H-TX			
D4605	8-713-102-80	DIODE 1T369-01-T8A			
D4704	8-719-404-49	DIODE MA111-TX			
		< IC >			
IC4501	8-759-364-05	IC M62376GP-65AD			
IC4502	8-759-486-77	IC IR3Y37M4			
IC4601	8-759-491-15	IC LZ9GH164 (TRV93)			
IC4601	8-759-530-20	IC CM7017L3-T4 (TRV85/TRV815)			
IC4602	8-759-327-01	IC NJM062V(TE2)			
IC4701	8-759-075-70	IC TA75S393F-TE85R			
IC4801	8-759-494-53	IC BU9729K-E2			
		< COIL >			
L4501	1-414-754-11	INDUCTOR	10uH		
L4502	1-414-754-11	INDUCTOR	10uH		
L4503	1-414-754-11	INDUCTOR	10uH		
L4601	1-414-754-11	INDUCTOR	10uH (TRV85/TRV815)		
L4603	1-414-754-11	INDUCTOR	10uH		
L4604	1-414-754-11	INDUCTOR	10uH		
L4605	1-412-951-11	INDUCTOR	10uH (TRV85/TRV815)		
L4605	1-412-954-11	INDUCTOR	18uH (TRV93)		
L4701	1-409-536-41	COIL, CHOKE	150uH		
		< TRANSISTOR >			
Q4501	8-729-420-24	TRANSISTOR	2SB1218A-QRS-TX		
Q4601	8-729-402-42	TRANSISTOR	UN5213-TX		
Q4602	8-729-402-42	TRANSISTOR	UN5213-TX		
Q4604	8-729-230-63	TRANSISTOR	2SD1819A-QRS-TX (TRV93)		
Q4605	8-729-230-63	TRANSISTOR	2SD1819A-QRS-TX		
Q4606	8-729-420-24	TRANSISTOR	2SB1218A-QRS-TX		
Q4607	8-729-230-63	TRANSISTOR	2SD1819A-QRS-TX		
Q4608	8-729-420-24	TRANSISTOR	2SB1218A-QRS-TX		
Q4701	8-729-039-43	TRANSISTOR	FP216-TL		
Q4702	8-729-015-74	TRANSISTOR	UN5111-TX		
		< RESISTOR >			
R4501	1-216-840-11	METAL CHIP	39K	5%	1/16W
R4505	1-216-841-11	METAL CHIP	47K	5%	1/16W
R4512	1-216-837-11	METAL CHIP	22K	5%	1/16W
R4513	1-216-834-11	METAL CHIP	12K	5%	1/16W
R4516	1-216-837-11	METAL CHIP	22K	5%	1/16W
R4517	1-216-835-11	METAL CHIP	15K	5%	1/16W
R4518	1-216-839-11	METAL CHIP	33K	5%	1/16W
R4520	1-216-852-11	METAL CHIP	390K	5%	1/16W
R4521	1-216-834-11	METAL CHIP	12K	5%	1/16W
R4522	1-216-840-11	METAL CHIP	39K	5%	1/16W (TRV93)
R4522	1-216-843-11	METAL CHIP	68K	5%	1/16W (TRV85/TRV815)
R4528	1-218-895-11	RES,CHIP	100K	0.50%	1/16W
R4531	1-216-821-11	METAL CHIP	1K	5%	1/16W
R4532	1-216-841-11	METAL CHIP	47K	5%	1/16W
R4533	1-216-864-11	METAL CHIP	0	5%	1/16W

The components identified by mark ⚠ or dotted line with mark ⚠ are critical for safety.
Replace only with part number specified.

Les composants identifiés par une marque ⚠ sont critiques pour la sécurité.
Ne les remplacer que par une piéce portant le numéro spécifié.

Ref. No.	Part No.	Description			Remark
R4534	1-216-805-11	METAL CHIP	47	5%	1/16W
R4535	1-216-805-11	METAL CHIP	47	5%	1/16W
R4536	1-216-805-11	METAL CHIP	47	5%	1/16W
R4537	1-216-821-11	METAL CHIP	1K	5%	1/16W (TRV85/TRV815)
R4537	1-216-829-11	METAL CHIP	4.7K	5%	1/16W (TRV93)
R4541	1-216-825-11	METAL CHIP	2.2K	5%	1/16W
R4542	1-216-824-11	METAL CHIP	1.8K	5%	1/16W
R4544	1-216-821-11	METAL CHIP	1K	5%	1/16W
R4602	1-216-864-11	METAL CHIP	0	5%	1/16W (TRV85/TRV815)
R4603	1-216-864-11	METAL CHIP	0	5%	1/16W
R4604	1-216-864-11	METAL CHIP	0	5%	1/16W
R4606	1-216-864-11	METAL CHIP	0	5%	1/16W (TRV85/TRV815)
R4607	1-216-864-11	METAL CHIP	0	5%	1/16W (TRV93)
R4608	1-216-864-11	METAL CHIP	0	5%	1/16W (TRV93)
R4610	1-216-842-11	METAL CHIP	56K	5%	1/16W (TRV85/TRV815)
R4610	1-216-845-11	METAL CHIP	100K	5%	1/16W (TRV93)
R4612	1-216-833-11	METAL CHIP	10K	5%	1/16W
R4613	1-216-841-11	METAL CHIP	47K	5%	1/16W
R4615	1-216-839-11	METAL CHIP	33K	5%	1/16W
R4616	1-216-857-11	METAL CHIP	1M	5%	1/16W
R4617	1-216-833-11	METAL CHIP	10K	5%	1/16W
R4621	1-216-857-11	METAL CHIP	1M	5%	1/16W (TRV93)
R4622	1-216-864-11	METAL CHIP	0	5%	1/16W
R4625	1-218-887-11	RES,CHIP	47K	0.50%	1/16W (TRV85/TRV815)
R4625	1-218-891-11	RES,CHIP	68K	0.50%	1/16W (TRV93)
R4627	1-218-897-11	RES,CHIP	120K	0.50%	1/16W
R4628	1-216-864-11	METAL CHIP	0	5%	1/16W
R4629	1-216-833-11	METAL CHIP	10K	5%	1/16W
R4630	1-216-821-11	METAL CHIP	1K	5%	1/16W
R4632	1-216-864-11	METAL CHIP	0	5%	1/16W
R4635	1-216-829-11	METAL CHIP	4.7K	5%	1/16W (TRV93)
R4636	1-216-837-11	METAL CHIP	22K	5%	1/16W (TRV93)
R4636	1-216-864-11	METAL CHIP	0	5%	1/16W (TRV85/TRV815)
R4637	1-216-864-11	METAL CHIP	0	5%	1/16W (TRV93)
R4638	1-216-833-11	METAL CHIP	10K	5%	1/16W (TRV93)
R4639	1-216-833-11	METAL CHIP	10K	5%	1/16W (TRV93)
R4640	1-216-845-11	METAL CHIP	100K	5%	1/16W
R4641	1-216-839-11	METAL CHIP	33K	5%	1/16W
R4642	1-216-829-11	METAL CHIP	4.7K	5%	1/16W (TRV93)
R4643	1-216-841-11	METAL CHIP	47K	5%	1/16W (TRV85/TRV815)
R4643	1-216-842-11	METAL CHIP	56K	5%	1/16W (TRV93)
R4644	1-216-839-11	METAL CHIP	33K	5%	1/16W
R4645	1-216-844-11	METAL CHIP	82K	5%	1/16W (TRV93)
R4646	1-216-844-11	METAL CHIP	82K	5%	1/16W (TRV93)
R4647	1-216-864-11	METAL CHIP	0	5%	1/16W (TRV85/TRV815)
R4648	1-216-864-11	METAL CHIP	0	5%	1/16W (TRV85/TRV815)
R4651	1-218-883-11	RES,CHIP	33K	0.50%	1/16W (TRV93)
R4652	1-216-864-11	METAL CHIP	0	5%	1/16W (TRV85/TRV815)
R4652	1-218-879-11	RES,CHIP	22K	0.50%	1/16W (TRV93)
R4653	1-218-883-11	RES,CHIP	33K	0.50%	1/16W (TRV93)
R4654	1-218-879-11	RES,CHIP	22K	0.50%	1/16W (TRV93)
R4657	1-216-864-11	METAL CHIP	0	5%	1/16W (TRV93)
R4658	1-216-864-11	METAL CHIP	0	5%	1/16W (TRV93)
R4659	1-216-864-11	METAL CHIP	0	5%	1/16W (TRV93)
R4660	1-216-864-11	METAL CHIP	0	5%	1/16W (TRV93)
R4661	1-216-864-11	METAL CHIP	0	5%	1/16W (TRV93)
R4663	1-216-864-11	METAL CHIP	0	5%	1/16W (TRV85/TRV815)
R4664	1-216-864-11	METAL CHIP	0	5%	1/16W (TRV85/TRV815)
R4665	1-216-864-11	METAL CHIP	0	5%	1/16W (TRV85/TRV815)
R4666	1-216-864-11	METAL CHIP	0	5%	1/16W (TRV85/TRV815)
R4667	1-216-864-11	METAL CHIP	0	5%	1/16W (TRV85/TRV815)
R4668	1-216-864-11	METAL CHIP	0	5%	1/16W (TRV85/TRV815)
R4669	1-216-864-11	METAL CHIP	0	5%	1/16W (TRV93)
R4670	1-216-864-11	METAL CHIP	0	5%	1/16W (TRV93)
R4671	1-216-864-11	METAL CHIP	0	5%	1/16W (TRV93)
R4672	1-216-836-11	METAL CHIP	18K	5%	1/16W (TRV85/TRV815)
R4673	1-216-864-11	METAL CHIP	0	5%	1/16W (TRV85/TRV815)
R4674	1-216-864-11	METAL CHIP	0	5%	1/16W (TRV93)
R4676	1-216-864-11	METAL CHIP	0	5%	1/16W (TRV93)
R4677	1-216-864-11	METAL CHIP	0	5%	1/16W (TRV85/TRV815)
R4678	1-216-864-11	METAL CHIP	0	5%	1/16W (TRV85/TRV815)
R4679	1-216-864-11	METAL CHIP	0	5%	1/16W (TRV93)
R4680	1-216-864-11	METAL CHIP	0	5%	1/16W (TRV93)
R4681	1-216-864-11	METAL CHIP	0	5%	1/16W (TRV93)

Ref. No.	Part No.	Description			Remark
R4682	1-216-864-11	METAL CHIP	0	5%	1/16W (TRV85/TRV815)
R4683	1-216-864-11	METAL CHIP	0	5%	1/16W (TRV85/TRV815)
R4684	1-216-864-11	METAL CHIP	0	5%	1/16W (TRV85/TRV815)
R4685	1-216-842-11	METAL CHIP	56K	5%	1/16W (TRV85/TRV815)
R4685	1-216-845-11	METAL CHIP	100K	5%	1/16W (TRV93)
R4686	1-216-842-11	METAL CHIP	56K	5%	1/16W (TRV85/TRV815)
R4686	1-216-845-11	METAL CHIP	100K	5%	1/16W (TRV93)
R4688	1-216-864-11	METAL CHIP	0	5%	1/16W
R4692	1-216-839-11	METAL CHIP	33K	5%	1/16W (TRV93)
R4692	1-216-842-11	METAL CHIP	56K	5%	1/16W (TRV85/TRV815)
R4693	1-216-844-11	METAL CHIP	82K	5%	1/16W (TRV85/TRV815)
R4693	1-216-850-11	METAL CHIP	270K	5%	1/16W (TRV93)
R4694	1-216-833-11	METAL CHIP	10K	5%	1/16W
R4695	1-216-833-11	METAL CHIP	10K	5%	1/16W
R4696	1-216-864-11	METAL CHIP	0	5%	1/16W (TRV93)
R4697	1-216-864-11	METAL CHIP	0	5%	1/16W (TRV85/TRV815)
R4698	1-216-864-11	METAL CHIP	0	5%	1/16W (TRV85/TRV815)
R4703	1-216-055-00	METAL CHIP	1.8K	5%	1/10W
R4704	1-216-055-00	METAL CHIP	1.8K	5%	1/10W
R4705	1-216-845-11	METAL CHIP	100K	5%	1/16W
R4706	1-216-831-11	METAL CHIP	6.8K	5%	1/16W
R4707	1-216-837-11	METAL CHIP	22K	5%	1/16W
R4708	1-216-810-11	METAL CHIP	120	5%	1/16W
R4709	1-216-817-11	METAL CHIP	470	5%	1/16W
R4710	1-216-816-11	METAL CHIP	390	5%	1/16W
R4801	1-216-823-11	METAL CHIP	1.5K	5%	1/16W
R4802	1-216-825-11	METAL CHIP	2.2K	5%	1/16W
R4803	1-216-828-11	METAL CHIP	3.9K	5%	1/16W
R4804	1-216-832-11	METAL CHIP	8.2K	5%	1/16W
R4805	1-216-838-11	METAL CHIP	27K	5%	1/16W
R4806	1-216-822-11	METAL CHIP	1.2K	5%	1/16W
R4807	1-216-809-11	METAL CHIP	100	5%	1/16W
R4808	1-216-809-11	METAL CHIP	100	5%	1/16W
R4811	1-216-864-11	METAL CHIP	0	5%	1/16W
R4812	1-216-855-11	METAL CHIP	680K	5%	1/16W
		< SWITCH >			
S4801	1-692-088-41	SWITCH, TACTILE (LCD BRIGHT +)			
S4802	1-692-088-41	SWITCH, TACTILE (LCD BRIGHT -)			
S4803	1-692-088-41	SWITCH, TACTILE (VOLUME +)			
S4804	1-692-088-41	SWITCH, TACTILE (VOLUME -)			
		< TRANSFORMER >			
⚠T4701	1-429-507-31	TRANSFORMER, INVERTER			

Ref. No.	Part No.	Description			Remark
	A-7073-405-A	PJ-83(M) BOARD, COMPLETE			
		**********			
		(EXCEPT TRV65/TRV65PK/TRV85/TRV93/TRV615/TRV815)			
	A-7073-410-A	PJ-83(H) BOARD, COMPLETE			
		**********			
		(TRV65/TRV65PK/TRV615) (Ref.No. 4,000 Series)			
	A-7073-433-A	PJ-84(H) BOARD, COMPLETE			
		**********			
		(TRV85/TRV93/TRV815) (Ref.No. 9,000 Series)			
		< CAPACITOR >			
C101	1-110-569-11	TANTAL. CHIP	47uF	20%	6.3V
		< CONNECTOR >			
* CN101	1-764-521-11	CONNECTOR, FFC/FPC (ZIF) 12P			
		< DIODE >			
D101	8-719-059-57	DIODE MAZJ082DFLSO			
		(TRV65/TRV65PK/TRV85/TRV93/TRV615/TRV815)			
D102	8-719-059-57	DIODE MAZJ082DFLSO			
D103	8-719-059-57	DIODE MAZJ082DFLSO			
D104	8-719-420-14	DIODE MA8082-TX			
		(TRV65/TRV65PK/TRV85/TRV93/TRV615/TRV815)			
D105	8-719-059-57	DIODE MAZJ082DFLSO			
		(TRV65/TRV65PK/TRV85/TRV93/TRV615/TRV815)			
D106	8-719-059-57	DIODE MAZJ082DFLSO			
		(TRV65/TRV65PK/TRV85/TRV93/TRV615/TRV815)			
		< JACK >			
J101	1-537-747-21	TERMINAL BOARD (S VIDEO/VIDEO/AUDIO)			
		(TRV65/TRV65PK/TRV85/TRV93/TRV615/TRV815)			
J101	1-537-747-41	TERMINAL BOARD (VIDEO/AUDIO)			
		(EXCEPT TRV65/TRV65PK/TRV85/TRV93/TRV615/TRV815)			
		< COIL >			
L101	1-414-072-11	INDUCTOR	1uH		
L102	1-216-295-91	SHORT 0			
L103	1-216-295-91	SHORT 0			
		(TRV65/TRV65PK/TRV85/TRV93/TRV615/TRV815)			
L104	1-216-295-91	SHORT 0			
		(TRV65/TRV65PK/TRV85/TRV93/TRV615/TRV815)			
		< TRANSISTOR >			
Q101	8-729-101-07	TRANSISTOR 2SB798-T1-DLDK			
Q102	8-729-230-63	TRANSISTOR 2SD1819A-QRS-TX			
		< RESISTOR >			
R101	1-216-864-11	METAL CHIP	0	5%	1/16W
R102	1-216-138-00	METAL CHIP	3.3	5%	1/8W
R103	1-216-830-11	METAL CHIP	5.6K	5%	1/16W
R104	1-216-820-11	METAL CHIP	820	5%	1/16W
R105	1-216-836-11	METAL CHIP	18K	5%	1/16W
R106	1-216-864-11	METAL CHIP	0	5%	1/16W
		(TRV65/TRV65PK/TRV85/TRV93/TRV615/TRV815)			

The components identified by mark ⚠ or dotted line with mark ⚠ are critical for safety.
Replace only with part number specified.

Les composants identifiés par une marque ⚠ sont critiques pour la sécurité.
Ne les remplacer que par une piéce portant le numéro spécifié.

Ref. No.	Part No.	Description	Remark
R107	1-216-864-11	METAL CHIP 0 5% 1/16W	(TRV65/TRV65PK/TRV85/TRV93/TRV615/TRV815)
R108	1-216-821-11	METAL CHIP 1K 5% 1/16W	(TRV65/TRV65PK/TRV85/TRV93/TRV615/TRV815)
R109	1-216-821-11	METAL CHIP 1K 5% 1/16W	

	A-7073-404-A	SE-66(V) BOARD, COMPLETE ********** (TRV15/TRV15PK/TRV15E/TRV15EP)	
	A-7073-409-A	SE-66(VH) BOARD, COMPLETE ********** (TRV65/TRV65PK/TRV615)	
	A-7073-443-A	SE-66(VMM) BOARD, COMPLETE ********** (TRV25/TRV25PK/TRV35/TRV35E/TRV215) (Ref.No. 4,000 Series)	
	A-7073-434-A	SE-67(VH) BOARD, COMPLETE ********** (TRV85/TRV815/TRV93) (Ref.No. 9,000 Series)	
		< CAPACITOR >	
C451	1-164-004-11	CERAMIC CHIP 0.1uF 10% 25V	(EXCEPT TRV15/TRV15PK/TRV15E/TRV15EP)
C452	1-164-004-11	CERAMIC CHIP 0.1uF 10% 25V	(EXCEPT TRV15/TRV15PK/TRV15E/TRV15EP)
C453	1-104-847-11	TANTAL. CHIP 22uF 20% 4V	(EXCEPT TRV15/TRV15PK/TRV15E/TRV15EP)
C454	1-104-847-11	TANTAL. CHIP 22uF 20% 4V	(EXCEPT TRV15/TRV15PK/TRV15E/TRV15EP)
C457	1-164-343-11	CERAMIC CHIP 0.056uF 10% 25V	(EXCEPT TRV15/TRV15PK/TRV15E/TRV15EP)
C458	1-164-343-11	CERAMIC CHIP 0.056uF 10% 25V	(EXCEPT TRV15/TRV15PK/TRV15E/TRV15EP)
C459	1-164-343-11	CERAMIC CHIP 0.056uF 10% 25V	(EXCEPT TRV15/TRV15PK/TRV15E/TRV15EP)
C460	1-110-666-11	ELECT CHIP 22uF 20% 6.3V	(EXCEPT TRV15/TRV15PK/TRV15E/TRV15EP)
C461	1-164-343-11	CERAMIC CHIP 0.056uF 10% 25V	(EXCEPT TRV15/TRV15PK/TRV15E/TRV15EP)
C462	1-110-666-11	ELECT CHIP 22uF 20% 6.3V	(EXCEPT TRV15/TRV15PK/TRV15E/TRV15EP)
C464	1-110-501-11	CERAMIC CHIP 0.33uF 10% 16V	(EXCEPT TRV15/TRV15PK/TRV15E/TRV15EP)
C465	1-135-259-11	TANTAL. CHIP 10uF 20% 6.3V	(EXCEPT TRV15/TRV15PK/TRV15E/TRV15EP)
C466	1-162-970-11	CERAMIC CHIP 0.01uF 10% 25V	(EXCEPT TRV15/TRV15PK/TRV15E/TRV15EP)
		< CONNECTOR >	
CN451	1-691-348-11	CONNECTOR, FFC/FPC (ZIF) 10P	
CN451	1-766-646-21	CONNECTOR, FFC/FPC 10P	
		< DIODE >	
D451	8-719-059-57	DIODE MAZJ082DFLSO	(TRV65/TRV65PK/TRV85/TRV93/TRV615/TRV815)
D452	8-719-059-57	DIODE MAZJ082DFLSO	

Ref. No.	Part No.	Description	Remark
		< IC >	
IC451	8-759-489-19	IC uPC6756GR-8JG-E2	(EXCEPT TRV15/TRV15PK/TRV15E/TRV15EP)
		< JACK >	
J451	1-695-514-11	JACK (SMALL TYPE) 1P (EARPHONES)	(EXCEPT TRV65/TRV65PK/TRV85/TRV93/TRV615/TRV815)
J451	1-695-514-21	JACK (SMALL TYPE) 1P (HEAD PHONES)	(TRV65/TRV65PK/TRV85/TRV93/TRV615/TRV815)
		< COIL >	
L451	1-414-754-11	INDUCTOR 10uH	(EXCEPT TRV15/TRV15PK/TRV15E/TRV15EP)
L453	1-216-295-91	SHORT 0	(TRV65/TRV65PK/TRV85/TRV93/TRV615/TRV815)
L454	1-216-295-91	SHORT 0	(TRV65/TRV65PK/TRV85/TRV93/TRV615/TRV815)
		< RESISTOR >	
R451	1-216-837-11	METAL CHIP 22K 5% 1/16W	(EXCEPT TRV15/TRV15PK/TRV15E/TRV15EP)
R452	1-216-837-11	METAL CHIP 22K 5% 1/16W	(EXCEPT TRV15/TRV15PK/TRV15E/TRV15EP)
R453	1-216-837-11	METAL CHIP 22K 5% 1/16W	(EXCEPT TRV15/TRV15PK/TRV15E/TRV15EP)
R454	1-216-837-11	METAL CHIP 22K 5% 1/16W	(EXCEPT TRV15/TRV15PK/TRV15E/TRV15EP)
R455	1-216-864-11	METAL CHIP 0 5% 1/16W	(EXCEPT TRV15/TRV15PK/TRV15E/TRV15EP)
R456	1-216-857-11	METAL CHIP 1M 5% 1/16W	(EXCEPT TRV15/TRV15PK/TRV15E/TRV15EP)
R458	1-216-833-11	METAL CHIP 10K 5% 1/16W	(EXCEPT TRV15/TRV15PK/TRV15E/TRV15EP)
R459	1-216-857-11	METAL CHIP 1M 5% 1/16W	(EXCEPT TRV15/TRV15PK/TRV15E/TRV15EP)
R461	1-216-835-11	METAL CHIP 15K 5% 1/16W	(EXCEPT TRV15/TRV15PK/TRV15E/TRV15EP)
R463	1-216-809-11	METAL CHIP 100 5% 1/16W	(EXCEPT TRV15/TRV15PK/TRV15E/TRV15EP)
		< SENSOR >	
SE451	1-803-041-31	SENSOR, ANGULAR VELOCITY (PITCH)	(EXCEPT TRV15/TRV15PK/TRV15E/TRV15EP)
SE452	1-803-041-41	SENSOR, ANGULAR VELOCITY (YAW)	(EXCEPT TRV15/TRV15PK/TRV15E/TRV15EP)

	A-7093-449-A	VC-195(VHI0U) BOARD, COMPLETE ********** (TRV65/TRV65PK/TRV85/TRV615/TRV815)	
	A-7093-450-A	VC-195(VMMIOU) BOARD, COMPLETE (TRV35) **********	
	A-7093-451-A	VC-195(7VMMU) BOARD, COMPLETE ********** (TRV25/TRV25PK/TRV215)	
	A-7093-452-A	VC-195(7VZU) BOARD, COMPLETE ********** (TRV15/TRV15PK)	

Ref. No.	Part No.	Description			Remark
	A-7093-455-A	VC-195(VMM0P) BOARD, COMPLETE (TRV35E)			
		**********			
	A-7093-456-A	VC-195(VZ0P) BOARD, COMPLETE			
		**********			
					(TRV15E/TRV15EP)
	A-7093-459-A	VC-195(VHCIBOU) BOARD, COMPLETE (TRV93)			
		**********			
					(Ref.No. 1,000 Series)
		< CAPACITOR >			
C001	1-162-970-11	CERAMIC CHIP	0.01uF	10%	25V
C004	1-162-970-11	CERAMIC CHIP	0.01uF	10%	25V
C006	1-104-752-11	TANTAL. CHIP	33uF	20%	6.3V
C007	1-104-752-11	TANTAL. CHIP	33uF	20%	6.3V
C008	1-162-927-11	CERAMIC CHIP	100PF	5%	50V
C009	1-164-217-11	CERAMIC CHIP	150PF	5%	50V
C010	1-162-970-11	CERAMIC CHIP	0.01uF	10%	25V
C011	1-162-926-11	CERAMIC CHIP	82PF	5%	50V
C012	1-162-927-11	CERAMIC CHIP	100PF	5%	50V
C013	1-162-970-11	CERAMIC CHIP	0.01uF	10%	25V
		(TRV65/TRV65PK/TRV85/TRV93/TRV615/TRV815)			
C014	1-162-970-11	CERAMIC CHIP	0.01uF	10%	25V
		(TRV65/TRV65PK/TRV85/TRV93/TRV615/TRV815)			
C015	1-162-970-11	CERAMIC CHIP	0.01uF	10%	25V
		(TRV65/TRV65PK/TRV85/TRV93/TRV615/TRV815)			
C016	1-162-970-11	CERAMIC CHIP	0.01uF	10%	25V
		(TRV65/TRV65PK/TRV85/TRV93/TRV615/TRV815)			
C017	1-162-964-11	CERAMIC CHIP	0.001uF	10%	50V
C018	1-162-970-11	CERAMIC CHIP	0.01uF	10%	25V
C019	1-162-964-11	CERAMIC CHIP	0.001uF	10%	50V
C020	1-162-964-11	CERAMIC CHIP	0.001uF	10%	50V
		(TRV65/TRV65PK/TRV85/TRV93/TRV615/TRV815)			
C021	1-164-156-11	CERAMIC CHIP	0.1uF		25V
C022	1-162-970-11	CERAMIC CHIP	0.01uF	10%	25V
C023	1-165-176-11	CERAMIC CHIP	0.047uF	10%	16V
C024	1-165-176-11	CERAMIC CHIP	0.047uF	10%	16V
C025	1-162-964-11	CERAMIC CHIP	0.001uF	10%	50V
		(TRV65/TRV65PK/TRV85/TRV93/TRV615/TRV815)			
C026	1-162-970-11	CERAMIC CHIP	0.01uF	10%	25V
C027	1-162-970-11	CERAMIC CHIP	0.01uF	10%	25V
C028	1-135-259-11	TANTAL. CHIP	10uF	20%	6.3V
C029	1-162-970-11	CERAMIC CHIP	0.01uF	10%	25V
C030	1-162-970-11	CERAMIC CHIP	0.01uF	10%	25V
C031	1-162-970-11	CERAMIC CHIP	0.01uF	10%	25V
C032	1-165-176-11	CERAMIC CHIP	0.047uF	10%	16V
C033	1-165-176-11	CERAMIC CHIP	0.047uF	10%	16V
C034	1-107-826-11	CERAMIC CHIP	0.1uF	10%	16V
C035	1-162-920-11	CERAMIC CHIP	27PF	5%	50V
C036	1-162-970-11	CERAMIC CHIP	0.01uF	10%	25V
C037	1-162-970-11	CERAMIC CHIP	0.01uF	10%	25V
C038	1-162-970-11	CERAMIC CHIP	0.01uF	10%	25V
		(TRV65/TRV65PK/TRV85/TRV93/TRV615/TRV815)			
C039	1-162-970-11	CERAMIC CHIP	0.01uF	10%	25V
C040	1-162-970-11	CERAMIC CHIP	0.01uF	10%	25V
		(TRV65/TRV65PK/TRV85/TRV93/TRV615/TRV815)			
C041	1-107-826-11	CERAMIC CHIP	0.1uF	10%	16V
C042	1-162-970-11	CERAMIC CHIP	0.01uF	10%	25V
C043	1-162-970-11	CERAMIC CHIP	0.01uF	10%	25V

Ref. No.	Part No.	Description			Remark
C048	1-162-970-11	CERAMIC CHIP	0.01uF	10%	25V
C049	1-162-970-11	CERAMIC CHIP	0.01uF	10%	25V
C050	1-162-970-11	CERAMIC CHIP	0.01uF	10%	25V
C052	1-162-970-11	CERAMIC CHIP	0.01uF	10%	25V
C053	1-162-970-11	CERAMIC CHIP	0.01uF	10%	25V
C055	1-162-970-11	CERAMIC CHIP	0.01uF	10%	25V
C058	1-162-968-11	CERAMIC CHIP	0.0047uF	10%	50V
C059	1-164-217-11	CERAMIC CHIP	150PF	5%	50V
C060	1-163-809-11	CERAMIC CHIP	0.047uF	10%	25V
C061	1-162-970-11	CERAMIC CHIP	0.01uF	10%	25V
C062	1-162-926-11	CERAMIC CHIP	82PF	5%	50V
C065	1-162-970-11	CERAMIC CHIP	0.01uF	10%	25V
C068	1-162-921-11	CERAMIC CHIP	33PF	5%	50V
C069	1-162-970-11	CERAMIC CHIP	0.01uF	10%	25V
C070	1-162-908-11	CERAMIC CHIP	3PF	0.25PF	50V
C071	1-104-752-11	TANTAL. CHIP	33uF	20%	6.3V
C072	1-162-958-11	CERAMIC CHIP	270PF	5%	50V
C073	1-164-392-11	CERAMIC CHIP	390PF	5%	50V
C074	1-162-915-11	CERAMIC CHIP	10PF	0.5PF	50V
		(TRV65/TRV65PK/TRV85/TRV93/TRV615/TRV815)			
C075	1-162-959-11	CERAMIC CHIP	330PF	5%	50V
		(TRV65/TRV65PK/TRV85/TRV93/TRV615/TRV815)			
C075	1-164-315-11	CERAMIC CHIP	470PF	5%	50V
		(EXCEPT TRV65/TRV65PK/TRV85/TRV93/TRV615/TRV815)			
C076	1-162-921-11	CERAMIC CHIP	33PF	5%	50V
		(TRV65/TRV65PK/TRV85/TRV93/TRV615/TRV815)			
C078	1-162-928-11	CERAMIC CHIP	120PF	5%	50V
C079	1-162-919-11	CERAMIC CHIP	22PF	5%	50V
		(TRV65/TRV65PK/TRV85/TRV93/TRV615/TRV815)			
C080	1-162-915-11	CERAMIC CHIP	10PF	0.5PF	50V
		(TRV65/TRV65PK/TRV85/TRV93/TRV615/TRV815)			
C080	1-162-919-11	CERAMIC CHIP	22PF	5%	50V
		(EXCEPT TRV65/TRV65PK/TRV85/TRV93/TRV615/TRV815)			
C081	1-162-916-11	CERAMIC CHIP	12PF	5%	50V
C082	1-162-915-11	CERAMIC CHIP	10PF	0.5PF	50V
C083	1-162-924-11	CERAMIC CHIP	56PF	5%	50V
					(TRV15E/TRV15EP/TRV35E)
C083	1-162-925-11	CERAMIC CHIP	68PF	5%	50V
		(TRV15/TRV15PK/TRV25/TRV25PK/TRV215/TRV35)			
C083	1-162-926-11	CERAMIC CHIP	82PF	5%	50V
		(TRV65/TRV65PK/TRV85/TRV93/TRV615/TRV815)			
C085	1-162-970-11	CERAMIC CHIP	0.01uF	10%	25V
C086	1-115-156-11	CERAMIC CHIP	1uF		10V
C088	1-162-925-11	CERAMIC CHIP	68PF	5%	50V
		(EXCEPT TRV65/TRV65PK/TRV85/TRV93/TRV615/TRV815)			
C088	1-162-957-11	CERAMIC CHIP	220PF	5%	50V
		(TRV65/TRV65PK/TRV85/TRV93/TRV615/TRV815)			
C089	1-162-919-11	CERAMIC CHIP	22PF	5%	50V
		(EXCEPT TRV65/TRV65PK/TRV85/TRV93/TRV615/TRV815)			
C089	1-162-923-11	CERAMIC CHIP	47PF	5%	50V
		(TRV65/TRV65PK/TRV85/TRV93/TRV615/TRV815)			
C090	1-162-958-11	CERAMIC CHIP	270PF	5%	50V
C152	1-162-970-11	CERAMIC CHIP	0.01uF	10%	25V
C156	1-164-677-11	CERAMIC CHIP	0.033uF	10%	16V
C157	1-162-964-11	CERAMIC CHIP	0.001uF	10%	50V
		(TRV65/TRV65PK/TRV85/TRV93/TRV615/TRV815)			
C158	1-162-970-11	CERAMIC CHIP	0.01uF	10%	25V
C159	1-164-346-11	CERAMIC CHIP	1uF		16V
C160	1-162-970-11	CERAMIC CHIP	0.01uF	10%	25V
C161	1-115-467-11	CERAMIC CHIP	0.22uF	10%	10V

VC-195

Ref. No.	Part No.	Description			Remark
C162	1-135-180-21	TANTALUM CHIP	3.3uF	20%	6.3V
		(TRV65/TRV65PK/TRV85/TRV93/TRV615/TRV815)			
C163	1-135-180-21	TANTALUM CHIP	3.3uF	20%	6.3V
C164	1-162-970-11	CERAMIC CHIP	0.01uF	10%	25V
		(TRV65/TRV65PK/TRV85/TRV93/TRV615/TRV815)			
C166	1-162-970-11	CERAMIC CHIP	0.01uF	10%	25V
C168	1-109-982-11	CERAMIC CHIP	1uF	10%	10V
C169	1-109-982-11	CERAMIC CHIP	1uF	10%	10V
C170	1-162-970-11	CERAMIC CHIP	0.01uF	10%	25V
C171	1-162-970-11	CERAMIC CHIP	0.01uF	10%	25V
		(TRV65/TRV65PK/TRV85/TRV93/TRV615/TRV815)			
C172	1-110-501-11	CERAMIC CHIP	0.33uF	10%	16V
		(TRV65/TRV65PK/TRV85/TRV93/TRV615/TRV815)			
C173	1-164-227-11	CERAMIC CHIP	0.022uF	10%	25V
		(TRV65/TRV65PK/TRV85/TRV93/TRV615/TRV815)			
C174	1-164-217-11	CERAMIC CHIP	150PF	5%	50V
		(TRV65/TRV65PK/TRV85/TRV93/TRV615/TRV815)			
C175	1-162-964-11	CERAMIC CHIP	0.001uF	10%	50V
		(TRV65/TRV65PK/TRV85/TRV93/TRV615/TRV815)			
C177	1-162-927-11	CERAMIC CHIP	100PF	5%	50V
		(TRV65/TRV65PK/TRV85/TRV93/TRV615/TRV815)			
C178	1-162-970-11	CERAMIC CHIP	0.01uF	10%	25V
		(TRV65/TRV65PK/TRV85/TRV93/TRV615/TRV815)			
C179	1-162-919-11	CERAMIC CHIP	22PF	5%	50V
		(TRV65/TRV65PK/TRV85/TRV93/TRV615/TRV815)			
C180	1-115-467-11	CERAMIC CHIP	0.22uF	10%	10V
C181	1-162-970-11	CERAMIC CHIP	0.01uF	10%	25V
		(TRV65/TRV65PK/TRV85/TRV93/TRV615/TRV815)			
C182	1-135-149-21	TANTALUM CHIP	2.2uF	20%	10V
C183	1-135-149-21	TANTALUM CHIP	2.2uF	20%	10V
		(TRV65/TRV65PK/TRV85/TRV93/TRV615/TRV815)			
C184	1-115-156-11	CERAMIC CHIP	1uF		10V
C185	1-126-246-11	ELECT CHIP	220uF	20%	4V
C187	1-126-246-11	ELECT CHIP	220uF	20%	4V
		(TRV65/TRV65PK/TRV85/TRV93/TRV615/TRV815)			
C188	1-135-259-11	TANTAL. CHIP	10uF	20%	6.3V
C190	1-107-826-11	CERAMIC CHIP	0.1uF	10%	16V
C191	1-162-970-11	CERAMIC CHIP	0.01uF	10%	25V
C192	1-104-852-11	TANTAL. CHIP	22uF	20%	6.3V
C202	1-135-259-11	TANTAL. CHIP	10uF	20%	6.3V
C204	1-162-964-11	CERAMIC CHIP	0.001uF	10%	50V
C205	1-115-156-11	CERAMIC CHIP	1uF		10V
C206	1-162-967-11	CERAMIC CHIP	0.0033uF	10%	50V
C207	1-162-965-11	CERAMIC CHIP	0.0015uF	10%	50V
C209	1-162-915-11	CERAMIC CHIP	10PF	0.5PF	50V
		(TRV65/TRV65PK/TRV85/TRV93/TRV615/TRV815)			
C209	1-162-921-11	CERAMIC CHIP	33PF	5%	50V
		(EXCEPT TRV65/TRV65PK/TRV85/TRV93/TRV615/TRV815)			
C210	1-162-922-11	CERAMIC CHIP	39PF	5%	50V
		(TRV65/TRV65PK/TRV85/TRV93/TRV615/TRV815)			
C211	1-135-181-21	TANTALUM CHIP	4.7uF	20%	6.3V
C212	1-164-392-11	CERAMIC CHIP	390PF	5%	50V
C217	1-162-970-11	CERAMIC CHIP	0.01uF	10%	25V
C218	1-107-823-11	CERAMIC CHIP	0.47uF	10%	16V
C219	1-109-982-11	CERAMIC CHIP	1uF	10%	10V
C224	1-162-927-11	CERAMIC CHIP	100PF	5%	50V
C225	1-162-970-11	CERAMIC CHIP	0.01uF	10%	25V
C226	1-109-982-11	CERAMIC CHIP	1uF	10%	10V
C227	1-135-201-11	TANTALUM CHIP	10uF	20%	4V
C229	1-162-970-11	CERAMIC CHIP	0.01uF	10%	25V
C230	1-115-156-11	CERAMIC CHIP	1uF		10V

Ref. No.	Part No.	Description			Remark
C232	1-164-156-11	CERAMIC CHIP	0.1uF		25V
C233	1-135-201-11	TANTALUM CHIP	10uF	20%	4V
C234	1-162-970-11	CERAMIC CHIP	0.01uF	10%	25V
C235	1-162-970-11	CERAMIC CHIP	0.01uF	10%	25V
C237	1-164-156-11	CERAMIC CHIP	0.1uF		25V
C239	1-115-156-11	CERAMIC CHIP	1uF		10V
C243	1-115-156-11	CERAMIC CHIP	1uF		10V
		(TRV65/TRV65PK/TRV85/TRV93/TRV615/TRV815)			
C244	1-115-156-11	CERAMIC CHIP	1uF		10V
		(TRV65/TRV65PK/TRV85/TRV93/TRV615/TRV815)			
C245	1-162-970-11	CERAMIC CHIP	0.01uF	10%	25V
C246	1-162-970-11	CERAMIC CHIP	0.01uF	10%	25V
C247	1-135-201-11	TANTALUM CHIP	10uF	20%	4V
C250	1-162-970-11	CERAMIC CHIP	0.01uF	10%	25V
C301	1-135-201-11	TANTALUM CHIP	10uF	20%	4V
C302	1-135-201-11	TANTALUM CHIP	10uF	20%	4V
		(TRV65/TRV65PK/TRV85/TRV93/TRV615/TRV815)			
C307	1-135-151-21	TANTALUM CHIP	4.7uF	20%	4V
C308	1-135-259-11	TANTAL. CHIP	10uF	20%	6.3V
C309	1-135-318-11	TANTAL. CHIP	33uF	20%	4V
C310	1-104-847-11	TANTAL. CHIP	22uF	20%	4V
C312	1-107-823-11	CERAMIC CHIP	0.47uF	10%	16V
C313	1-115-467-11	CERAMIC CHIP	0.22uF	10%	10V
		(TRV65/TRV65PK/TRV85/TRV93/TRV615/TRV815)			
C316	1-115-467-11	CERAMIC CHIP	0.22uF	10%	10V
C317	1-115-467-11	CERAMIC CHIP	0.22uF	10%	10V
		(TRV65/TRV65PK/TRV85/TRV93/TRV615/TRV815)			
C318	1-104-847-11	TANTAL. CHIP	22uF	20%	4V
C319	1-115-467-11	CERAMIC CHIP	0.22uF	10%	10V
C320	1-107-826-11	CERAMIC CHIP	0.1uF	10%	16V
C321	1-162-968-11	CERAMIC CHIP	0.0047uF	10%	50V
		(TRV65/TRV65PK/TRV85/TRV93/TRV615/TRV815)			
C322	1-163-017-00	CERAMIC CHIP	0.0047uF	5%	50V
C323	1-162-970-11	CERAMIC CHIP	0.01uF	10%	25V
		(TRV65/TRV65PK/TRV85/TRV93/TRV615/TRV815)			
C325	1-162-970-11	CERAMIC CHIP	0.01uF	10%	25V
		(EXCEPT TRV65/TRV65PK/TRV85/TRV93/TRV615/TRV815)			
C326	1-109-982-11	CERAMIC CHIP	1uF	10%	10V
C327	1-162-970-11	CERAMIC CHIP	0.01uF	10%	25V
		(TRV65/TRV65PK/TRV85/TRV93/TRV615/TRV815)			
C328	1-164-232-11	CERAMIC CHIP	0.01uF		50V
C329	1-162-970-11	CERAMIC CHIP	0.01uF	10%	25V
		(TRV65/TRV65PK/TRV85/TRV93/TRV615/TRV815)			
C332	1-109-982-11	CERAMIC CHIP	1uF	10%	10V
C331	1-162-968-11	CERAMIC CHIP	0.0047uF	10%	50V
		(TRV65/TRV65PK/TRV85/TRV93/TRV615/TRV815)			
C333	1-162-968-11	CERAMIC CHIP	0.0047uF	10%	50V
C334	1-115-467-11	CERAMIC CHIP	0.22uF	10%	10V
		(TRV65/TRV65PK/TRV85/TRV93/TRV615/TRV815)			
C335	1-115-467-11	CERAMIC CHIP	0.22uF	10%	10V
C336	1-109-982-11	CERAMIC CHIP	1uF	10%	10V
		(TRV65/TRV65PK/TRV85/TRV93/TRV615/TRV815)			
C337	1-109-982-11	CERAMIC CHIP	1uF	10%	10V
C338	1-109-982-11	CERAMIC CHIP	1uF	10%	10V
C339	1-109-982-11	CERAMIC CHIP	1uF	10%	10V
		(TRV65/TRV65PK/TRV85/TRV93/TRV615/TRV815)			
C340	1-109-982-11	CERAMIC CHIP	1uF	10%	10V
C341	1-109-982-11	CERAMIC CHIP	1uF	10%	10V
		(TRV65/TRV65PK/TRV85/TRV93/TRV615/TRV815)			
C342	1-165-176-11	CERAMIC CHIP	0.047uF	10%	16V

Ref. No.	Part No.	Description			Remark
C344	1-162-970-11	CERAMIC CHIP	0.01uF	10%	25V
		(TRV65/TRV65PK/TRV85/TRV93/TRV615/TRV815)			
C346	1-162-970-11	CERAMIC CHIP	0.01uF	10%	25V
C347	1-162-970-11	CERAMIC CHIP	0.01uF	10%	25V
C349	1-162-970-11	CERAMIC CHIP	0.01uF	10%	25V
C371	1-104-908-11	TANTAL. CHIP	47uF	20%	4V
C372	1-104-908-11	TANTAL. CHIP	47uF	20%	4V
C378	1-135-259-11	TANTAL. CHIP	10uF	20%	6.3V
C380	1-135-259-11	TANTAL. CHIP	10uF	20%	6.3V
C381	1-164-346-11	CERAMIC CHIP	1uF		16V
C382	1-164-227-11	CERAMIC CHIP	0.022uF	10%	25V
C383	1-107-826-11	CERAMIC CHIP	0.1uF	10%	16V
C384	1-107-826-11	CERAMIC CHIP	0.1uF	10%	16V
C385	1-107-826-11	CERAMIC CHIP	0.1uF	10%	16V
C386	1-107-826-11	CERAMIC CHIP	0.1uF	10%	16V
C387	1-104-847-11	TANTAL. CHIP	22uF	20%	4V
C388	1-162-961-11	CERAMIC CHIP	330PF	10%	50V
C402	1-109-982-11	CERAMIC CHIP	1uF	10%	10V
C404	1-162-915-11	CERAMIC CHIP	10PF	0.5PF	50V
C405	1-162-915-11	CERAMIC CHIP	10PF	0.5PF	50V
C406	1-162-970-11	CERAMIC CHIP	0.01uF	10%	25V
C410	1-109-982-11	CERAMIC CHIP	1uF	10%	10V
C411	1-162-969-11	CERAMIC CHIP	0.0068uF	10%	25V
C412	1-162-969-11	CERAMIC CHIP	0.0068uF	10%	25V
C414	1-164-156-11	CERAMIC CHIP	0.1uF		25V
C415	1-164-156-11	CERAMIC CHIP	0.1uF		25V
C416	1-164-156-11	CERAMIC CHIP	0.1uF		25V
C417	1-164-156-11	CERAMIC CHIP	0.1uF		25V
C418	1-164-156-11	CERAMIC CHIP	0.1uF		25V
C419	1-164-156-11	CERAMIC CHIP	0.1uF		25V
C420	1-162-970-11	CERAMIC CHIP	0.01uF	10%	25V
C451	1-107-826-11	CERAMIC CHIP	0.1uF	10%	16V
C452	1-107-826-11	CERAMIC CHIP	0.1uF	10%	16V
C453	1-107-826-11	CERAMIC CHIP	0.1uF	10%	16V
C454	1-162-968-11	CERAMIC CHIP	0.0047uF	10%	50V
C455	1-162-968-11	CERAMIC CHIP	0.0047uF	10%	50V
C456	1-107-826-11	CERAMIC CHIP	0.1uF	10%	16V
C457	1-162-968-11	CERAMIC CHIP	0.0047uF	10%	50V
C458	1-107-826-11	CERAMIC CHIP	0.1uF	10%	16V
C459	1-107-826-11	CERAMIC CHIP	0.1uF	10%	16V
C460	1-162-970-11	CERAMIC CHIP	0.01uF	10%	25V
C461	1-165-176-11	CERAMIC CHIP	0.047uF	10%	16V
C462	1-162-970-11	CERAMIC CHIP	0.01uF	10%	25V
C463	1-165-176-11	CERAMIC CHIP	0.047uF	10%	16V
C464	1-107-826-11	CERAMIC CHIP	0.1uF	10%	16V
C465	1-109-982-11	CERAMIC CHIP	1uF	10%	10V
C467	1-162-968-11	CERAMIC CHIP	0.0047uF	10%	50V
C468	1-165-176-11	CERAMIC CHIP	0.047uF	10%	16V
C469	1-107-826-11	CERAMIC CHIP	0.1uF	10%	16V
C470	1-164-227-11	CERAMIC CHIP	0.022uF	10%	25V
C471	1-164-227-11	CERAMIC CHIP	0.022uF	10%	25V
C472	1-164-156-11	CERAMIC CHIP	0.1uF		25V
C473	1-164-227-11	CERAMIC CHIP	0.022uF	10%	25V
C474	1-162-964-11	CERAMIC CHIP	0.001uF	10%	50V
C475	1-162-964-11	CERAMIC CHIP	0.001uF	10%	50V
C476	1-165-176-11	CERAMIC CHIP	0.047uF	10%	16V
C478	1-165-176-11	CERAMIC CHIP	0.047uF	10%	16V
C480	1-164-227-11	CERAMIC CHIP	0.022uF	10%	25V

Ref. No.	Part No.	Description			Remark
C483	1-164-156-11	CERAMIC CHIP	0.1uF		25V
C484	1-164-156-11	CERAMIC CHIP	0.1uF		25V
C485	1-164-505-11	CERAMIC CHIP	2.2uF		16V
C486	1-164-156-11	CERAMIC CHIP	0.1uF		25V
C487	1-162-957-11	CERAMIC CHIP	220PF	5%	50V
C488	1-107-826-11	CERAMIC CHIP	0.1uF	10%	16V
C489	1-162-962-11	CERAMIC CHIP	470PF	10%	50V
C501	1-162-919-11	CERAMIC CHIP	22PF	5%	50V
C502	1-162-964-11	CERAMIC CHIP	0.001uF	10%	50V
C503	1-162-919-11	CERAMIC CHIP	22PF	5%	50V
C504	1-162-922-11	CERAMIC CHIP	39PF	5%	50V
C506	1-115-156-11	CERAMIC CHIP	1uF		10V
C507	1-115-156-11	CERAMIC CHIP	1uF		10V
C508	1-162-970-11	CERAMIC CHIP	0.01uF	10%	25V
C509	1-135-214-21	TANTAL. CHIP	4.7uF	20%	20V
C510	1-135-201-11	TANTALUM CHIP	10uF	20%	4V
C511	1-164-232-11	CERAMIC CHIP	0.01uF		50V
C512	1-107-826-11	CERAMIC CHIP	0.1uF	10%	16V
C513	1-115-156-11	CERAMIC CHIP	1uF		10V
C514	1-162-964-11	CERAMIC CHIP	0.001uF	10%	50V
C515	1-162-917-11	CERAMIC CHIP	15PF	5%	50V
C516	1-107-826-11	CERAMIC CHIP	0.1uF	10%	16V
C517	1-115-467-11	CERAMIC CHIP	0.22uF	10%	10V
C518	1-162-964-11	CERAMIC CHIP	0.001uF	10%	50V
C519	1-107-826-11	CERAMIC CHIP	0.1uF	10%	16V
C520	1-162-970-11	CERAMIC CHIP	0.01uF	10%	25V
C521	1-162-970-11	CERAMIC CHIP	0.01uF	10%	25V
C522	1-107-826-11	CERAMIC CHIP	0.1uF	10%	16V
C523	1-115-467-11	CERAMIC CHIP	0.22uF	10%	10V
C524	1-162-962-11	CERAMIC CHIP	470PF	10%	50V
C525	1-162-970-11	CERAMIC CHIP	0.01uF	10%	25V
C526	1-107-826-11	CERAMIC CHIP	0.1uF	10%	16V
C527	1-107-826-11	CERAMIC CHIP	0.1uF	10%	16V
C528	1-109-982-11	CERAMIC CHIP	1uF	10%	10V
C529	1-107-826-11	CERAMIC CHIP	0.1uF	10%	16V
C530	1-107-826-11	CERAMIC CHIP	0.1uF	10%	16V
C531	1-104-847-11	TANTAL. CHIP	22uF	20%	4V
C532	1-162-917-11	CERAMIC CHIP	15PF	5%	50V
		(TRV65/TRV65PK/TRV85/TRV93/TRV615/TRV815)			
C533	1-162-917-11	CERAMIC CHIP	15PF	5%	50V
		(TRV65/TRV65PK/TRV85/TRV93/TRV615/TRV815)			
C552	1-162-968-11	CERAMIC CHIP	0.0047uF	10%	50V
C553	1-162-970-11	CERAMIC CHIP	0.01uF	10%	25V
C554	1-162-970-11	CERAMIC CHIP	0.01uF	10%	25V
C555	1-107-826-11	CERAMIC CHIP	0.1uF	10%	16V
C556	1-162-970-11	CERAMIC CHIP	0.01uF	10%	25V
C557	1-162-962-11	CERAMIC CHIP	470PF	10%	50V
C558	1-115-467-11	CERAMIC CHIP	0.22uF	10%	10V
C559	1-162-970-11	CERAMIC CHIP	0.01uF	10%	25V
C560	1-164-156-11	CERAMIC CHIP	0.1uF		25V
C561	1-162-970-11	CERAMIC CHIP	0.01uF	10%	25V
C562	1-162-966-11	CERAMIC CHIP	0.0022uF	10%	50V
C563	1-162-970-11	CERAMIC CHIP	0.01uF	10%	25V
C564	1-104-752-11	TANTAL. CHIP	33uF	20%	6.3V
C565	1-164-156-11	CERAMIC CHIP	0.1uF		25V
C566	1-115-156-11	CERAMIC CHIP	1uF		10V
C567	1-162-964-11	CERAMIC CHIP	0.001uF	10%	50V
C569	1-164-004-11	CERAMIC CHIP	0.1uF	10%	25V

Ref. No.	Part No.	Description			Remark
C570	1-162-970-11	CERAMIC CHIP	0.01uF	10%	25V
C571	1-104-851-11	TANTAL. CHIP	10uF	20%	10V
C572	1-104-851-11	TANTAL. CHIP	10uF	20%	10V
C605	1-135-091-00	TANTALUM CHIP	1uF	20%	16V
C607	1-164-156-11	CERAMIC CHIP	0.1uF		25V
C610	1-164-156-11	CERAMIC CHIP	0.1uF		25V
C611	1-164-156-11	CERAMIC CHIP	0.1uF		25V
C612	1-119-749-91	TANTAL. CHIP	33uF	20%	4V
C613	1-104-851-11	TANTAL. CHIP	10uF	20%	10V
C615	1-164-156-11	CERAMIC CHIP	0.1uF		25V
C616	1-164-156-11	CERAMIC CHIP	0.1uF		25V
C617	1-162-970-11	CERAMIC CHIP	0.01uF	10%	25V
C618	1-162-970-11	CERAMIC CHIP	0.01uF	10%	25V
C619	1-162-970-11	CERAMIC CHIP	0.01uF	10%	25V
C620	1-162-970-11	CERAMIC CHIP	0.01uF	10%	25V
C621	1-162-970-11	CERAMIC CHIP	0.01uF	10%	25V
C622	1-162-970-11	CERAMIC CHIP	0.01uF	10%	25V
C623	1-162-970-11	CERAMIC CHIP	0.01uF	10%	25V
C624	1-162-970-11	CERAMIC CHIP	0.01uF	10%	25V
C625	1-164-156-11	CERAMIC CHIP	0.1uF		25V
C626	1-164-156-11	CERAMIC CHIP	0.1uF		25V
C627	1-164-227-11	CERAMIC CHIP	0.022uF	10%	25V
C628	1-162-919-11	CERAMIC CHIP	22PF	5%	50V
C629	1-162-917-11	CERAMIC CHIP	15PF	5%	50V
C630	1-164-156-11	CERAMIC CHIP	0.1uF		25V
C634	1-164-156-11	CERAMIC CHIP	0.1uF		25V
		(TRV65/TRV65PK/TRV85/TRV93/TRV615/TRV815)			
C636	1-164-156-11	CERAMIC CHIP	0.1uF		25V
C637	1-162-964-11	CERAMIC CHIP	0.001uF	10%	50V
C751	1-135-201-11	TANTALUM CHIP	10uF	20%	4V
		(TRV35/TRV65/TRV65PK/TRV85/TRV93/TRV615/TRV815)			
C752	1-135-259-11	TANTAL. CHIP	10uF	20%	6.3V
		(TRV35/TRV65/TRV65PK/TRV85/TRV93/TRV615/TRV815)			
C753	1-162-970-11	CERAMIC CHIP	0.01uF	10%	25V
		(TRV35/TRV65/TRV65PK/TRV85/TRV93/TRV615/TRV815)			
C754	1-107-823-11	CERAMIC CHIP	0.47uF	10%	16V
		(TRV35/TRV65/TRV65PK/TRV85/TRV93/TRV615/TRV815)			
C755	1-107-823-11	CERAMIC CHIP	0.47uF	10%	16V
		(TRV35/TRV65/TRV65PK/TRV85/TRV93/TRV615/TRV815)			
C756	1-162-970-11	CERAMIC CHIP	0.01uF	10%	25V
		(TRV35/TRV65/TRV65PK/TRV85/TRV93/TRV615/TRV815)			
C757	1-135-201-11	TANTALUM CHIP	10uF	20%	4V
		(TRV35/TRV65/TRV65PK/TRV85/TRV93/TRV615/TRV815)			
C758	1-109-982-11	CERAMIC CHIP	1uF	10%	10V
		(TRV35/TRV65/TRV65PK/TRV85/TRV93/TRV615/TRV815)			
C759	1-162-970-11	CERAMIC CHIP	0.01uF	10%	25V
		(TRV35/TRV65/TRV65PK/TRV85/TRV93/TRV615/TRV815)			
C760	1-135-181-21	TANTALUM CHIP	4.7uF	20%	6.3V
		(TRV35/TRV65/TRV65PK/TRV85/TRV93/TRV615/TRV815)			
C761	1-162-970-11	CERAMIC CHIP	0.01uF	10%	25V
		(TRV35/TRV65/TRV65PK/TRV85/TRV93/TRV615/TRV815)			
C762	1-164-668-11	CERAMIC CHIP	510PF	5%	50V
		(TRV35/TRV65/TRV65PK/TRV85/TRV93/TRV615/TRV815)			
C763	1-162-970-11	CERAMIC CHIP	0.01uF	10%	25V
		(TRV35/TRV65/TRV65PK/TRV85/TRV93/TRV615/TRV815)			
C764	1-135-259-11	TANTAL. CHIP	10uF	20%	6.3V
		(TRV35/TRV65/TRV65PK/TRV85/TRV93/TRV615/TRV815)			
C765	1-162-970-11	CERAMIC CHIP	0.01uF	10%	25V
		(TRV35/TRV65/TRV65PK/TRV85/TRV93/TRV615/TRV815)			
C766	1-109-982-11	CERAMIC CHIP	1uF	10%	10V
		(TRV35/TRV65/TRV65PK/TRV85/TRV93/TRV615/TRV815)			
C767	1-107-826-11	CERAMIC CHIP	0.1uF	10%	16V
		(TRV35/TRV65/TRV65PK/TRV85/TRV93/TRV615/TRV815)			
C768	1-162-909-11	CERAMIC CHIP	4PF	0.25PF	50V
		(TRV35/TRV65/TRV65PK/TRV85/TRV93/TRV615/TRV815)			
C769	1-107-823-11	CERAMIC CHIP	0.47uF	10%	16V
		(TRV35/TRV65/TRV65PK/TRV85/TRV93/TRV615/TRV815)			
C770	1-107-823-11	CERAMIC CHIP	0.47uF	10%	16V
		(TRV35/TRV65/TRV65PK/TRV85/TRV93/TRV615/TRV815)			
C771	1-162-921-11	CERAMIC CHIP	33PF	5%	50V
		(TRV35/TRV65/TRV65PK/TRV85/TRV93/TRV615/TRV815)			
C772	1-109-982-11	CERAMIC CHIP	1uF	10%	10V
		(TRV35/TRV65/TRV65PK/TRV85/TRV93/TRV615/TRV815)			
C773	1-162-922-11	CERAMIC CHIP	39PF	5%	50V
		(TRV35/TRV65/TRV65PK/TRV85/TRV93/TRV615/TRV815)			
C774	1-109-982-11	CERAMIC CHIP	1uF	10%	10V
		(TRV35/TRV65/TRV65PK/TRV85/TRV93/TRV615/TRV815)			
C775	1-107-826-11	CERAMIC CHIP	0.1uF	10%	16V
		(TRV35/TRV65/TRV65PK/TRV85/TRV93/TRV615/TRV815)			
C776	1-162-970-11	CERAMIC CHIP	0.01uF	10%	25V
		(TRV35/TRV65/TRV65PK/TRV85/TRV93/TRV615/TRV815)			
C777	1-162-970-11	CERAMIC CHIP	0.01uF	10%	25V
		(TRV35/TRV65/TRV65PK/TRV85/TRV93/TRV615/TRV815)			
C778	1-162-970-11	CERAMIC CHIP	0.01uF	10%	25V
		(TRV35/TRV65/TRV65PK/TRV85/TRV93/TRV615/TRV815)			
C781	1-104-847-11	TANTAL. CHIP	22uF	20%	4V
		(TRV35/TRV65/TRV65PK/TRV85/TRV93/TRV615/TRV815)			
		< CONNECTOR >			
CN001	1-691-354-21	CONNECTOR, FFC/FPC (ZIF) 16P			
CN001	1-766-677-21	CONNECTOR, FFC/FPC 16P			
CN501	1-779-332-11	CONNECTOR, FFC/FPC 16P			
CN551	1-766-353-21	CONNECTOR, FFC/TRVFPC 23P			
CN901	1-691-346-11	CONNECTOR, FFC/FPC (ZIF) 8P			
CN901	1-766-644-21	CONNECTOR, FFC/FPC 8P			
CN902	1-766-673-21	CONNECTOR, FFC/FPC 12P			
CN903	1-691-361-11	CONNECTOR, FFC/FPC (ZIF) 23P			
CN903	1-766-353-21	CONNECTOR, FFC/FPC 23P			
CN904	1-691-374-11	CONNECTOR, FFC/FPC 10P			
CN905	1-691-348-11	CONNECTOR, FFC/FPC (ZIF) 10P			
CN905	1-766-646-21	CONNECTOR, FFC/FPC 10P			
CN906	1-691-350-21	CONNECTOR, FFC/FPC (ZIF) 12P			
CN906	1-766-673-21	CONNECTOR, FFC/FPC 12P			
CN907	1-766-346-21	CONNECTOR, FFC/FPC 16P			
CN908	1-691-353-21	CONNECTOR, FFC/FPC (ZIF) 15P			
CN908	1-766-345-21	CONNECTOR, FFC/FPC 15P			
CN909	1-766-621-21	CONNECTOR, FFC/FPC 10P			
		(TRV65/TRV65PK/TRV85/TRV93/TRV615/TRV815)			
CN910	1-766-346-21	CONNECTOR, FFC/FPC 16P			
CN911	1-778-637-21	CONNECTOR, FFC/FPC (ZIF) 50P			
CN912	1-691-354-21	CONNECTOR, FFC/TRVFPC (ZIF) 16P			
CN914	1-691-542-21	CONNECTOR, BOARD TO BOARD 48P			
		< DIODE >			
D002	8-719-404-49	DIODE MA111-TX			
		(TRV65/TRV65PK/TRV85/TRV93/TRV615/TRV815)			
D201	8-719-055-86	DIODE KV1470TL1-3			
D202	8-719-055-86	DIODE KV1470TL1-3			
D371	8-719-404-49	DIODE MA111-TX			
D502	8-713-102-28	DIODE 1T379-04-T8A			

Ref. No.	Part No.	Description	Remark
D551	8-719-404-49	DIODE MA111-TX	
D601	8-719-421-27	DIODE MA728-TX	
D602	8-719-421-27	DIODE MA728-TX	
D604	8-719-404-49	DIODE MA111-TX	
D608	8-719-404-49	DIODE MA111-TX	
D609	8-719-049-09	DIODE 1SS367-T3SONY	
D610	8-719-421-27	DIODE MA728-TX	
D910	8-719-059-57	DIODE MAZJ082DFLSO	
		(TRV65/TRV65PK/TRV85/TRV93/TRV615/TRV815)	
D911	8-719-420-14	DIODE MA8082-TX	
		(TRV65/TRV65PK/TRV85/TRV93/TRV615/TRV815)	
		< FERRITE BEAD >	
FB001	1-414-229-11	FERRITE 0UH	
FB002	1-414-229-11	FERRITE 0UH	
FB003	1-414-229-11	FERRITE 0UH	
FB004	1-414-229-11	FERRITE 0UH	
FB151	1-414-228-11	FERRITE 0UH	
FB152	1-414-921-11	FERRITE 0UH	
FB201	1-414-228-11	FERRITE 0UH	
FB202	1-414-228-11	FERRITE 0UH	
FB203	1-414-228-11	FERRITE 0UH	
FB204	1-414-228-11	FERRITE 0UH	
		(TRV65/TRV65PK/TRV85/TRV93/TRV615/TRV815)	
FB205	1-414-228-11	FERRITE 0UH	
		(TRV65/TRV65PK/TRV85/TRV93/TRV615/TRV815)	
FB206	1-414-228-11	FERRITE 0UH	
FB501	1-414-228-11	FERRITE 0UH	
FB503	1-500-284-21	FERRITE 0UH	
FB504	1-500-284-21	FERRITE 0UH	
FB505	1-500-284-21	FERRITE 0UH	
		(TRV15/TRV15PK/TRV15E/TRV15EP)	
FB506	1-414-228-11	FERRITE 0UH	
		< IC >	
IC001	8-752-079-46	IC CXA2084R-T6	
IC151	8-752-078-82	IC CXA2030R-T6	
IC152	8-759-169-02	IC MB88344BPFV-G-BND-ER	
IC201	8-759-494-73	IC MB90097PFV-G-104-BND	
IC202	8-759-494-55	IC MB87F126PFF-G-BND	
IC204	8-752-390-52	IC CXD3124R-T6	
		(TRV65/TRV65PK/TRV85/TRV93/TRV615/TRV815)	
IC301	8-759-494-29	IC AN2982FH-EB	
		(TRV65/TRV65PK/TRV85/TRV93/TRV615/TRV815)	
IC301	8-759-494-30	IC AN2984FH-EB	
		(EXCEPT TRV65/TRV65PK/TRV85/TRV93/TRV615/TRV815)	
IC371	8-759-494-52	IC BA7783FS-E2	
IC401	8-759-445-94	IC AK6480AM-E2	
IC402	8-759-499-08	IC MB91191PFF-G-BND-ER	
IC451	8-759-327-67	IC LB1950V-TLM	
IC452	8-759-327-61	IC LB8112V-TLM	
		(EXCEPT TRV15E/TRV15EP/TRV35E)	
IC452	8-759-327-62	IC TA8482FN-EL	
		(TRV15E/TRV15EP/TRV35E)	
IC501	8-752-384-70	IC CXD2486R-T4	
IC502	8-759-462-43	IC AD9800JCSTRL	
IC551	8-759-444-87	IC NJM324V(TE2)	
IC552	8-759-351-46	IC MPC17A34RVMEL (NTSC)	
		(EXCEPT TRV15E/TRV15EP/TRV35E)	
IC552	8-759-475-79	IC uPD16833AG3-E2 (PAL)	
		(TRV15E/TRV15EP/TRV35E)	

Ref. No.	Part No.	Description	Remark
IC602	8-759-424-79	IC S-8423YFS-T2	
IC603	8-759-059-05	IC TL1596CPW-ELM1000	
IC604	8-759-494-75	IC S579C14PZ-8500-TEB	
IC751	8-759-498-52	IC LA9511W-TBM	
		(TRV35/TRV65/TRV65PK/TRV85/TRV93/TRV615/TRV815)	
		< COIL >	
L001	1-414-406-11	INDUCTOR 220uH	
L002	1-412-952-11	INDUCTOR 12uH	
L003	1-414-406-11	INDUCTOR 220uH	
L004	1-414-754-11	INDUCTOR 10uH	
L005	1-412-948-11	INDUCTOR 5.6uH	
L006	1-412-963-11	INDUCTOR 100uH	
L008	1-412-280-31	INDUCTOR 330uH	
L009	1-410-656-11	INDUCTOR CHIP 150uH	
L010	1-410-657-21	INDUCTOR CHIP 180uH	
L011	1-412-956-21	INDUCTOR 27uH	
		(TRV65/TRV65PK/TRV85/TRV93/TRV615/TRV815)	
L012	1-412-955-11	INDUCTOR 22uH	
L013	1-412-944-11	INDUCTOR 2.7uH	
L015	1-412-951-11	INDUCTOR 10uH	
L016	1-412-946-11	INDUCTOR 3.9uH	
L017	1-414-754-11	INDUCTOR 10uH	
L018	1-410-656-11	INDUCTOR CHIP 150uH	
L019	1-412-957-11	INDUCTOR 33uH	
L152	1-412-939-11	INDUCTOR 1uH	
		(TRV65/TRV65PK/TRV85/TRV93/TRV615/TRV815)	
L153	1-414-754-11	INDUCTOR 10uH	
L154	1-414-754-11	INDUCTOR 10uH	
L155	1-414-754-11	INDUCTOR 10uH	
L156	1-414-754-11	INDUCTOR 10uH	
L201	1-414-754-11	INDUCTOR 10uH	
L202	1-414-754-11	INDUCTOR 10uH	
L203	1-414-754-11	INDUCTOR 10uH	
L204	1-410-658-31	INDUCTOR CHIP 220uH	
L205	1-412-955-11	INDUCTOR 22uH	
		(TRV65/TRV65PK/TRV85/TRV93/TRV615/TRV815)	
L205	1-412-957-11	INDUCTOR 33uH	
		(EXCEPT TRV65/TRV65PK/TRV85/TRV93/TRV615/TRV815)	
L206	1-412-945-11	INDUCTOR 3.3uH	
L207	1-414-754-11	INDUCTOR 10uH	
L209	1-414-754-11	INDUCTOR 10uH	
L402	1-414-754-11	INDUCTOR 10uH	
L501	1-414-398-11	INDUCTOR 10uH	
L502	1-216-295-91	SHORT 0	
		(EXCEPT TRV65/TRV65PK/TRV85/TRV93/TRV615/TRV815)	
L502	1-412-955-11	INDUCTOR 22uH	
		(TRV65/TRV65PK/TRV85/TRV93/TRV615/TRV815)	
L552	1-414-398-11	INDUCTOR 10uH	
L553	1-414-754-11	INDUCTOR 10uH	
L555	1-414-754-11	INDUCTOR 10uH	
L602	1-414-754-11	INDUCTOR 10uH	
L751	1-412-948-11	INDUCTOR 5.6uH	
		(TRV35/TRV65/TRV65PK/TRV85/TRV93/TRV615/TRV815)	
L752	1-412-957-11	INDUCTOR 33uH	
		(TRV35/TRV65/TRV65PK/TRV85/TRV93/TRV615/TRV815)	
L753	1-412-957-11	INDUCTOR 33uH	
		(TRV35/TRV65/TRV65PK/TRV85/TRV93/TRV615/TRV815)	

Ref. No.	Part No.	Description	Remark
		< TRANSISTOR >	
Q001	8-729-031-69	TRANSISTOR 2SA1965-TL	
Q002	8-729-037-53	TRANSISTOR 2SB1462J-QR(K8).SO	
Q003	8-729-037-53	TRANSISTOR 2SB1462J-QR(K8).SO	
Q004	8-729-031-69	TRANSISTOR 2SA1965-TL	(TRV65/TRV65PK/TRV85/TRV93/TRV615/TRV815)
Q005	8-729-031-69	TRANSISTOR 2SA1965-TL	(TRV65/TRV65PK/TRV85/TRV93/TRV615/TRV815)
Q006	8-729-031-69	TRANSISTOR 2SA1965-TL	(TRV65/TRV65PK/TRV85/TRV93/TRV615/TRV815)
Q007	8-729-031-69	TRANSISTOR 2SA1965-TL	(TRV65/TRV65PK/TRV85/TRV93/TRV615/TRV815)
Q008	8-729-037-74	TRANSISTOR UN9213J-(K8).SO	(TRV65/TRV65PK/TRV85/TRV93/TRV615/TRV815)
Q009	8-729-037-74	TRANSISTOR UN9213J-(K8).SO	(TRV65/TRV65PK/TRV85/TRV93/TRV615/TRV815)
Q010	8-729-037-74	TRANSISTOR UN9213J-(K8).SO	(TRV65/TRV65PK/TRV85/TRV93/TRV615/TRV815)
Q011	8-729-037-74	TRANSISTOR UN9213J-(K8).SO	(TRV65/TRV65PK/TRV85/TRV93/TRV615/TRV815)
Q012	8-729-037-52	TRANSISTOR 2SD2216J-QR(K8).SO	
Q017	8-729-037-52	TRANSISTOR 2SD2216J-QR(K8).SO	
Q019	8-729-037-74	TRANSISTOR UN9213J-(K8).SO	
Q020	8-729-037-52	TRANSISTOR 2SD2216J-QR(K8).SO	
Q021	8-729-037-52	TRANSISTOR 2SD2216J-QR(K8).SO	
Q022	8-729-037-52	TRANSISTOR 2SD2216J-QR(K8).SO	(TRV65/TRV65PK/TRV85/TRV93/TRV615/TRV815)
Q023	8-729-037-52	TRANSISTOR 2SD2216J-QR(K8).SO	
Q024	8-729-037-52	TRANSISTOR 2SD2216J-QR(K8).SO	
Q025	8-729-043-40	TRANSISTOR 2SC4627J-C(K8).S0	(TRV65/TRV65PK/TRV85/TRV93/TRV615/TRV815)
Q026	8-729-031-69	TRANSISTOR 2SA1965-TL	(TRV65/TRV65PK/TRV85/TRV93/TRV615/TRV815)
Q027	8-729-037-53	TRANSISTOR 2SB1462J-QR(K8).SO	
Q028	8-729-037-74	TRANSISTOR UN9213J-(K8).SO	
Q029	8-729-037-53	TRANSISTOR 2SB1462J-QR(K8).SO	
Q030	8-729-037-53	TRANSISTOR 2SB1462J-QR(K8).SO	(TRV65/TRV65PK/TRV85/TRV93/TRV615/TRV815)
Q032	8-729-037-53	TRANSISTOR 2SB1462J-QR(K8).SO	
Q033	8-729-031-69	TRANSISTOR 2SA1965-TL	
Q034	8-729-037-53	TRANSISTOR 2SB1462J-QR(K8).SO	
Q036	8-729-043-40	TRANSISTOR 2SC4627J-C(K8).S0	
Q038	8-729-037-74	TRANSISTOR UN9213J-(K8).SO	
Q039	8-729-037-52	TRANSISTOR 2SD2216J-QR(K8).SO	
Q040	8-729-037-74	TRANSISTOR UN9213J-(K8).SO	
Q041	8-729-230-72	TRANSISTOR 2SA1362-YG-EL	
Q042	8-729-037-74	TRANSISTOR UN9213J-(K8).SO	
Q043	8-729-031-69	TRANSISTOR 2SA1965-TL	(TRV65/TRV65PK/TRV85/TRV93/TRV615/TRV815)
Q044	8-729-037-74	TRANSISTOR UN9213J-(K8).SO	(TRV65/TRV65PK/TRV85/TRV93/TRV615/TRV815)
Q151	8-729-037-61	TRANSISTOR UN9113J-(K8).SO	
Q153	8-729-040-77	TRANSISTOR 2SC5376-B(TE85L)	
Q154	8-729-040-77	TRANSISTOR 2SC5376-B(TE85L)	(TRV65/TRV65PK/TRV85/TRV93/TRV615/TRV815)
Q156	8-729-040-77	TRANSISTOR 2SC5376-B(TE85L)	(TRV65/TRV65PK/TRV85/TRV93/TRV615/TRV815)
Q202	8-729-037-52	TRANSISTOR 2SD2216J-QR(K8).SO	
Q203	8-729-037-53	TRANSISTOR 2SB1462J-QR(K8).SO	
Q204	8-729-037-52	TRANSISTOR 2SD2216J-QR(K8).SO	
Q205	8-729-037-74	TRANSISTOR UN9213J-(K8).SO	
Q208	8-729-037-74	TRANSISTOR UN9213J-(K8).SO	(TRV65/TRV65PK/TRV85/TRV93/TRV615/TRV815)
Q213	8-729-037-52	TRANSISTOR 2SD2216J-QR(K8).SO	
Q214	8-729-037-52	TRANSISTOR 2SD2216J-QR(K8).SO	
Q215	8-729-037-52	TRANSISTOR 2SD2216J-QR(K8).SO	
Q216	8-729-037-52	TRANSISTOR 2SC4738F-Y/GR(TPL3)	(TRV93)
Q217	8-729-037-53	TRANSISTOR 2SB1462J-QR(K8).SO	
Q218	8-729-037-74	TRANSISTOR UN9213J-(K8).SO	
Q301	8-729-042-74	TRANSISTOR UN9216J-(K8).SO	(TRV65/TRV65PK/TRV85/TRV93/TRV615/TRV815)
Q302	8-729-042-74	TRANSISTOR UN9216J-(K8).SO	
Q305	8-729-042-61	TRANSISTOR UN9115J-(K8).SO	
Q306	8-729-042-73	TRANSISTOR UN9215J-(K8).SO	
Q307	8-729-042-73	TRANSISTOR UN9215J-(K8).SO	(TRV65/TRV65PK/TRV85/TRV93/TRV615/TRV815)
Q308	8-729-037-61	TRANSISTOR UN9113J-(K8).SO	
Q309	8-729-037-74	TRANSISTOR UN9213J-(K8).SO	
Q310	8-729-037-74	TRANSISTOR UN9213J-(K8).SO	(TRV65/TRV65PK/TRV85/TRV93/TRV615/TRV815)
Q371	8-729-042-74	TRANSISTOR UN9216J-(K8).SO	
Q372	8-729-042-74	TRANSISTOR UN9216J-(K8).SO	(TRV65/TRV65PK/TRV85/TRV93/TRV615/TRV815)
Q452	8-729-037-74	TRANSISTOR UN9213J-(K8).SO	
Q453	8-729-037-74	TRANSISTOR UN9213J-(K8).SO	
Q454	8-729-037-53	TRANSISTOR 2SB1462J-QR(K8).SO	
Q455	8-729-037-53	TRANSISTOR 2SB1462J-QR(K8).SO	
Q456	8-729-037-52	TRANSISTOR 2SD2216J-QR(K8).SO	
Q501	8-729-037-53	TRANSISTOR 2SB1462J-QR(K8).SO	
Q551	8-729-037-53	TRANSISTOR 2SB1462J-QR(K8).SO	
Q552	8-729-037-52	TRANSISTOR 2SD2216J-QR(K8).SO	
Q553	8-729-037-52	TRANSISTOR 2SD2216J-QR(K8).SO	
Q607	8-729-041-43	TRANSISTOR HN1L02FU(TE85R)	
Q608	8-729-037-52	TRANSISTOR 2SD2216J-QR(K8).SO	
Q609	8-729-037-52	TRANSISTOR 2SD2216J-QR(K8).SO	(TRV35/TRV65/TRV65PK/TRV85/TRV93/TRV615/TRV815)
Q610	8-729-037-74	TRANSISTOR UN9213J-(K8).SO	
Q611	8-729-037-74	TRANSISTOR UN9213J-(K8).SO	(TRV35/TRV65/TRV65PK/TRV85/TRV93/TRV615/TRV815)
Q619	8-729-037-53	TRANSISTOR 2SB1462J-QR(K8).SO	(TRV65/TRV65PK/TRV85/TRV93/TRV615/TRV815)
Q620	8-729-042-58	TRANSISTOR UN9111J-(K8).SO	
		< RESISTOR >	
R001	1-216-864-11	METAL CHIP 0 5% 1/16W	(EXCEPT TRV65/TRV65PK/TRV85/TRV93/TRV615/TRV815)
R002	1-216-864-11	METAL CHIP 0 5% 1/16W	(EXCEPT TRV65/TRV65PK/TRV85/TRV93/TRV615/TRV815)
R003	1-216-806-11	RES,CHIP 56 5% 1/16W	
R004	1-216-818-11	METAL CHIP 560 5% 1/16W	
R005	1-216-809-11	METAL CHIP 100 5% 1/16W	
R006	1-216-825-11	METAL CHIP 2.2K 5% 1/16W	
R007	1-216-829-11	METAL CHIP 4.7K 5% 1/16W	
R008	1-216-814-11	METAL CHIP 270 5% 1/16W	
R009	1-216-813-11	METAL CHIP 220 5% 1/16W	
R010	1-216-828-11	METAL CHIP 3.9K 5% 1/16W	(TRV65/TRV65PK/TRV85/TRV93/TRV615/TRV815)
R011	1-216-828-11	METAL CHIP 3.9K 5% 1/16W	(TRV65/TRV65PK/TRV85/TRV93/TRV615/TRV815)

Ref. No.	Part No.	Description			Remark
R012	1-216-828-11	METAL CHIP	3.9K	5%	1/16W
		(TRV65/TRV65PK/TRV85/TRV93/TRV615/TRV815)			
R013	1-216-828-11	METAL CHIP	3.9K	5%	1/16W
		(TRV65/TRV65PK/TRV85/TRV93/TRV615/TRV815)			
R014	1-216-837-11	METAL CHIP	22K	5%	1/16W
R015	1-216-839-11	METAL CHIP	33K	5%	1/16W
R016	1-216-829-11	METAL CHIP	4.7K	5%	1/16W
		(TRV65/TRV65PK/TRV85/TRV93/TRV615/TRV815)			
R017	1-216-829-11	METAL CHIP	4.7K	5%	1/16W
		(TRV65/TRV65PK/TRV85/TRV93/TRV615/TRV815)			
R018	1-216-829-11	METAL CHIP	4.7K	5%	1/16W
		(TRV65/TRV65PK/TRV85/TRV93/TRV615/TRV815)			
R019	1-216-829-11	METAL CHIP	4.7K	5%	1/16W
		(TRV65/TRV65PK/TRV85/TRV93/TRV615/TRV815)			
R020	1-216-837-11	METAL CHIP	22K	5%	1/16W
R021	1-216-837-11	METAL CHIP	22K	5%	1/16W
R023	1-216-837-11	METAL CHIP	22K	5%	1/16W
R025	1-216-837-11	METAL CHIP	22K	5%	1/16W
R026	1-216-816-11	METAL CHIP	390	5%	1/16W
R027	1-216-816-11	METAL CHIP	390	5%	1/16W
R029	1-216-837-11	METAL CHIP	22K	5%	1/16W
R031	1-216-837-11	METAL CHIP	22K	5%	1/16W
R032	1-216-816-11	METAL CHIP	390	5%	1/16W
R033	1-216-816-11	METAL CHIP	390	5%	1/16W
R034	1-216-864-11	METAL CHIP	0	5%	1/16W
R035	1-216-841-11	METAL CHIP	47K	5%	1/16W
R037	1-216-824-11	METAL CHIP	1.8K	5%	1/16W
R038	1-216-841-11	METAL CHIP	47K	5%	1/16W
R039	1-216-824-11	METAL CHIP	1.8K	5%	1/16W
R040	1-216-864-11	METAL CHIP	0	5%	1/16W
R043	1-216-833-11	METAL CHIP	10K	5%	1/16W
		(TRV65/TRV65PK/TRV85/TRV93/TRV615/TRV815)			
R045	1-216-845-11	METAL CHIP	100K	5%	1/16W
R046	1-216-821-11	METAL CHIP	1K	5%	1/16W
R047	1-216-864-11	METAL CHIP	0	5%	1/16W
R048	1-216-864-11	METAL CHIP	0	5%	1/16W
R049	1-216-833-11	METAL CHIP	10K	5%	1/16W
R050	1-216-837-11	METAL CHIP	22K	5%	1/16W
R051	1-216-825-11	METAL CHIP	2.2K	5%	1/16W
R052	1-216-833-11	METAL CHIP	10K	5%	1/16W
R055	1-216-829-11	METAL CHIP	4.7K	5%	1/16W
		(EXCEPT TRV15E/TRV15EP/TRV35E)			
R055	1-216-830-11	METAL CHIP	5.6K	5%	1/16W
		(TRV15E/TRV15EP/TRV35E)			
R056	1-216-855-11	METAL CHIP	680K	5%	1/16W
R057	1-216-819-11	METAL CHIP	680	5%	1/16W
		(TRV65/TRV65PK/TRV85/TRV93/TRV615/TRV815)			
R057	1-216-864-11	METAL CHIP	0	5%	1/16W
		(EXCEPT TRV65/TRV65PK/TRV85/TRV93/TRV615/TRV815)			
R058	1-216-853-11	METAL CHIP	470K	5%	1/16W
R059	1-216-821-11	METAL CHIP	1K	5%	1/16W
R060	1-216-837-11	METAL CHIP	22K	5%	1/16W
R061	1-216-833-11	METAL CHIP	10K	5%	1/16W
R062	1-216-818-11	METAL CHIP	560	5%	1/16W
R063	1-216-817-11	METAL CHIP	470	5%	1/16W
		(TRV65/TRV65PK/TRV85/TRV93/TRV615/TRV815)			
R063	1-216-818-11	METAL CHIP	560	5%	1/16W
		(EXCEPT TRV65/TRV65PK/TRV85/TRV93/TRV615/TRV815)			
R064	1-216-828-11	METAL CHIP	3.9K	5%	1/16W
		(TRV65/TRV65PK/TRV85/TRV93/TRV615/TRV815)			
R064	1-216-864-11	METAL CHIP	0	5%	1/16W
		(EXCEPT TRV65/TRV65PK/TRV85/TRV93/TRV615/TRV815)			
R065	1-216-833-11	METAL CHIP	10K	5%	1/16W
		(TRV65/TRV65PK/TRV85/TRV93/TRV615/TRV815)			
R066	1-216-823-11	METAL CHIP	1.5K	5%	1/16W
		(TRV15E/TRV15EP/TRV35E)			
R066	1-216-825-11	METAL CHIP	2.2K	5%	1/16W
		(EXCEPT TRV15E/TRV15EP/TRV35E)			
R067	1-216-817-11	METAL CHIP	470	5%	1/16W
R068	1-216-817-11	METAL CHIP	470	5%	1/16W
R069	1-216-864-11	METAL CHIP	0	5%	1/16W
R072	1-216-864-11	METAL CHIP	0	5%	1/16W
R073	1-216-821-11	METAL CHIP	1K	5%	1/16W
R074	1-216-816-11	METAL CHIP	390	5%	1/16W
R075	1-216-817-11	METAL CHIP	470	5%	1/16W
R076	1-216-816-11	METAL CHIP	390	5%	1/16W
R077	1-216-814-11	METAL CHIP	270	5%	1/16W
		(TRV15E/TRV15EP/TRV35E)			
R077	1-216-815-11	METAL CHIP	330	5%	1/16W
		(TRV15/TRV15PK/TRV25/TRV25PK/TRV215/TRV35/TRV35PK/TRV315)			
R078	1-216-815-11	METAL CHIP	330	5%	1/16W
		(TRV65/TRV65PK/TRV85/TRV93/TRV615/TRV815)			
R079	1-216-815-11	METAL CHIP	330	5%	1/16W
		(TRV65/TRV65PK/TRV85/TRV93/TRV615/TRV815)			
R080	1-216-813-11	METAL CHIP	220	5%	1/16W
		(TRV65/TRV65PK/TRV85/TRV93/TRV615/TRV815)			
R081	1-216-826-11	METAL CHIP	2.7K	5%	1/16W
R082	1-216-822-11	METAL CHIP	1.2K	5%	1/16W
R083	1-216-820-11	METAL CHIP	820	5%	1/16W
		(TRV65/TRV65PK/TRV85/TRV93/TRV615/TRV815)			
R084	1-216-833-11	METAL CHIP	10K	5%	1/16W
		(TRV65/TRV65PK/TRV85/TRV93/TRV615/TRV815)			
R085	1-216-833-11	METAL CHIP	10K	5%	1/16W
R087	1-216-821-11	METAL CHIP	1K	5%	1/16W
		(TRV65/TRV65PK/TRV85/TRV93/TRV615/TRV815)			
R088	1-216-864-11	METAL CHIP	0	5%	1/16W
		(TRV65/TRV65PK/TRV85/TRV93/TRV615/TRV815)			
R092	1-216-809-11	METAL CHIP	100	5%	1/16W
R093	1-216-833-11	METAL CHIP	10K	5%	1/16W
R094	1-216-815-11	METAL CHIP	330	5%	1/16W
		(TRV65/TRV65PK/TRV85/TRV93/TRV615/TRV815)			
R095	1-216-839-11	METAL CHIP	33K	5%	1/16W
R096	1-216-813-11	METAL CHIP	220	5%	1/16W
R098	1-216-817-11	METAL CHIP	470	5%	1/16W
R099	1-216-817-11	METAL CHIP	470	5%	1/16W
R101	1-216-837-11	METAL CHIP	22K	5%	1/16W
R102	1-216-834-11	METAL CHIP	12K	5%	1/16W
R103	1-216-816-11	METAL CHIP	390	5%	1/16W
R104	1-216-828-11	METAL CHIP	3.9K	5%	1/16W
		(TRV65/TRV65PK/TRV85/TRV93/TRV615/TRV815)			
R105	1-216-814-11	METAL CHIP	270	5%	1/16W
		(EXCEPT TRV65/TRV65PK/TRV85/TRV93/TRV615/TRV815)			
R105	1-216-819-11	METAL CHIP	680	5%	1/16W
		(TRV65/TRV65PK/TRV85/TRV93/TRV615/TRV815)			
R106	1-216-823-11	METAL CHIP	1.5K	5%	1/16W
R107	1-216-833-11	METAL CHIP	10K	5%	1/16W
R109	1-216-829-11	METAL CHIP	4.7K	5%	1/16W
R110	1-216-829-11	METAL CHIP	4.7K	5%	1/16W
R112	1-216-833-11	METAL CHIP	10K	5%	1/16W
R113	1-216-825-11	METAL CHIP	2.2K	5%	1/16W

VC-195

Ref. No.	Part No.	Description			Remark
R152	1-216-822-11	METAL CHIP	1.2K	5%	1/16W
R154	1-216-822-11	METAL CHIP	1.2K	5%	1/16W
		(TRV65/TRV65PK/TRV85/TRV93/TRV615/TRV815)			
R157	1-216-822-11	METAL CHIP	1.2K	5%	1/16W
		(TRV65/TRV65PK/TRV85/TRV93/TRV615/TRV815)			
R161	1-216-804-11	METAL CHIP	39	5%	1/16W
		(TRV65/TRV65PK/TRV85/TRV93/TRV615/TRV815)			
R162	1-216-803-11	METAL CHIP	33	5%	1/16W
		(TRV65/TRV65PK/TRV85/TRV93/TRV615/TRV815)			
R165	1-216-803-11	METAL CHIP	33	5%	1/16W
		(TRV65/TRV65PK/TRV85/TRV93/TRV615/TRV815)			
R166	1-216-804-11	METAL CHIP	39	5%	1/16W
		(TRV65/TRV65PK/TRV85/TRV93/TRV615/TRV815)			
R167	1-216-803-11	METAL CHIP	33	5%	1/16W
R170	1-216-804-11	METAL CHIP	39	5%	1/16W
R175	1-216-836-11	METAL CHIP	18K	5%	1/16W
		(TRV15E/TRV15EP/TRV35E)			
R175	1-216-837-11	METAL CHIP	22K	5%	1/16W
		(EXCEPT TRV15E/TRV15EP/TRV35E)			
R176	1-216-837-11	METAL CHIP	22K	5%	1/16W
		(TRV65/TRV65PK/TRV85/TRV93/TRV615/TRV815)			
R177	1-216-821-11	METAL CHIP	1K	5%	1/16W
R178	1-216-821-11	METAL CHIP	1K	5%	1/16W
		(TRV65/TRV65PK/TRV85/TRV93/TRV615/TRV815)			
R179	1-216-815-11	METAL CHIP	330	5%	1/16W
R180	1-216-815-11	METAL CHIP	330	5%	1/16W
		(TRV65/TRV65PK/TRV85/TRV93/TRV615/TRV815)			
R183	1-218-876-11	RES,CHIP	16K	0.50%	1/16W
R184	1-218-847-11	RES,CHIP	1K	0.50%	1/16W
R202	1-216-833-11	METAL CHIP	10K	5%	1/16W
R203	1-216-814-11	METAL CHIP	270	5%	1/16W
R205	1-216-835-11	METAL CHIP	15K	5%	1/16W
R206	1-216-827-11	METAL CHIP	3.3K	5%	1/16W
R208	1-216-827-11	METAL CHIP	3.3K	5%	1/16W
R210	1-216-809-11	METAL CHIP	100	5%	1/16W
R211	1-216-830-11	METAL CHIP	5.6K	5%	1/16W
R212	1-216-825-11	METAL CHIP	2.2K	5%	1/16W
R214	1-216-823-11	METAL CHIP	1.5K	5%	1/16W
R215	1-216-822-11	METAL CHIP	1.2K	5%	1/16W
R216	1-216-811-11	METAL CHIP	150	5%	1/16W
R217	1-216-864-11	METAL CHIP	0	5%	1/16W
		(EXCEPT TRV65/TRV65PK/TRV85/TRV93/TRV615/TRV815)			
R218	1-216-826-11	METAL CHIP	2.7K	5%	1/16W
R219	1-216-826-11	METAL CHIP	2.7K	5%	1/16W
R220	1-216-815-11	METAL CHIP	330	5%	1/16W
R222	1-216-826-11	METAL CHIP	2.7K	5%	1/16W
					(TRV93)
R223	1-216-821-11	METAL CHIP	1K	5%	1/16W
R224	1-216-831-11	METAL CHIP	6.8K	5%	1/16W
R225	1-216-826-11	METAL CHIP	2.7K	5%	1/16W
R226	1-216-820-11	METAL CHIP	820	5%	1/16W
R227	1-216-811-11	METAL CHIP	150	5%	1/16W
R228	1-216-813-11	METAL CHIP	220	5%	1/16W
R229	1-216-805-11	METAL CHIP	47	5%	1/16W
R230	1-216-812-11	METAL CHIP	180	5%	1/16W
R231	1-216-812-11	METAL CHIP	180	5%	1/16W
R232	1-216-815-11	METAL CHIP	330	5%	1/16W
R233	1-216-824-11	METAL CHIP	1.8K	5%	1/16W
R234	1-216-832-11	METAL CHIP	8.2K	5%	1/16W
R236	1-216-825-11	METAL CHIP	2.2K	5%	1/16W

Ref. No.	Part No.	Description			Remark
R237	1-216-825-11	METAL CHIP	2.2K	5%	1/16W
R238	1-216-832-11	METAL CHIP	8.2K	5%	1/16W
R239	1-216-827-11	METAL CHIP	3.3K	5%	1/16W
R240	1-216-857-11	METAL CHIP	1M	5%	1/16W
R241	1-216-828-11	METAL CHIP	3.9K	5%	1/16W
R242	1-216-845-11	METAL CHIP	100K	5%	1/16W
R243	1-216-845-11	METAL CHIP	100K	5%	1/16W
R244	1-216-845-11	METAL CHIP	100K	5%	1/16W
R245	1-216-840-11	METAL CHIP	39K	5%	1/16W
R246	1-216-835-11	METAL CHIP	15K	5%	1/16W
R247	1-216-817-11	METAL CHIP	470	5%	1/16W
R248	1-216-822-11	METAL CHIP	1.2K	5%	1/16W
R249	1-216-833-11	METAL CHIP	10K	5%	1/16W
R250	1-216-295-91	SHORT	0		
		(TRV65/TRV65PK/TRV85/TRV93/TRV615/TRV815)			
R251	1-216-833-11	METAL CHIP	10K	5%	1/16W
R252	1-216-821-11	METAL CHIP	1K	5%	1/16W
R253	1-216-845-11	METAL CHIP	100K	5%	1/16W
R254	1-216-864-11	METAL CHIP	0	5%	1/16W
R255	1-216-833-11	METAL CHIP	10K	5%	1/16W
R256	1-216-845-11	METAL CHIP	100K	5%	1/16W
R257	1-216-295-91	SHORT	0		
R302	1-216-817-11	METAL CHIP	470	5%	1/16W
		(TRV65/TRV65PK/TRV85/TRV93/TRV615/TRV815)			
R303	1-216-817-11	METAL CHIP	470	5%	1/16W
R304	1-216-817-11	METAL CHIP	470	5%	1/16W
R305	1-216-817-11	METAL CHIP	470	5%	1/16W
		(TRV65/TRV65PK/TRV85/TRV93/TRV615/TRV815)			
R308	1-216-864-11	METAL CHIP	0	5%	1/16W
		(EXCEPT TRV65/TRV65PK/TRV85/TRV93/TRV615/TRV815)			
R311	1-216-841-11	METAL CHIP	47K	5%	1/16W
R313	1-216-864-11	METAL CHIP	0	5%	1/16W
R314	1-216-823-11	METAL CHIP	1.5K	5%	1/16W
R315	1-216-823-11	METAL CHIP	1.5K	5%	1/16W
		(TRV65/TRV65PK/TRV85/TRV93/TRV615/TRV815)			
R316	1-216-841-11	METAL CHIP	47K	5%	1/16W
		(TRV65/TRV65PK/TRV85/TRV93/TRV615/TRV815)			
R317	1-216-845-11	METAL CHIP	100K	5%	1/16W
R318	1-216-845-11	METAL CHIP	100K	5%	1/16W
R319	1-216-845-11	METAL CHIP	100K	5%	1/16W
		(TRV65/TRV65PK/TRV85/TRV93/TRV615/TRV815)			
R320	1-216-849-11	METAL CHIP	220K	5%	1/16W
		(TRV65/TRV65PK/TRV85/TRV93/TRV615/TRV815)			
R321	1-216-843-11	METAL CHIP	68K	5%	1/16W
R322	1-216-845-11	METAL CHIP	100K	5%	1/16W
		(EXCEPT TRV65/TRV65PK/TRV85/TRV93/TRV615/TRV815)			
R322	1-216-849-11	METAL CHIP	220K	5%	1/16W
		(TRV65/TRV65PK/TRV85/TRV93/TRV615/TRV815)			
R323	1-216-837-11	METAL CHIP	22K	5%	1/16W
R325	1-216-849-11	METAL CHIP	220K	5%	1/16W
		(EXCEPT TRV65/TRV65PK/TRV85/TRV93/TRV615/TRV815)			
R325	1-216-851-11	METAL CHIP	330K	5%	1/16W
		(TRV65/TRV65PK/TRV85/TRV93/TRV615/TRV815)			
R331	1-216-864-11	METAL CHIP	0	5%	1/16W
R343	1-216-864-11	METAL CHIP	0	5%	1/16W
		(TRV65/TRV65PK/TRV85/TRV93/TRV615/TRV815)			
R371	1-216-821-11	METAL CHIP	1K	5%	1/16W
R373	1-216-809-11	METAL CHIP	100	5%	1/16W
		(TRV65/TRV65PK/TRV85/TRV93/TRV615/TRV815)			
R374	1-216-809-11	METAL CHIP	100	5%	1/16W

Ref. No.	Part No.	Description			Remark
R375	1-216-834-11	METAL CHIP	12K	5%	1/16W
R376	1-216-834-11	METAL CHIP	12K	5%	1/16W
R377	1-216-834-11	METAL CHIP	12K	5%	1/16W
R378	1-216-825-11	METAL CHIP	2.2K	5%	1/16W
R379	1-216-852-11	METAL CHIP	390K	5%	1/16W
R382	1-216-837-11	METAL CHIP	22K	5%	1/16W
R383	1-216-837-11	METAL CHIP	22K	5%	1/16W
R384	1-216-829-11	METAL CHIP	4.7K	5%	1/16W
R385	1-216-826-11	METAL CHIP	2.7K	5%	1/16W
R386	1-216-849-11	METAL CHIP	220K	5%	1/16W
R402	1-216-821-11	METAL CHIP	1K	5%	1/16W
R403	1-216-845-11	METAL CHIP	100K	5%	1/16W
R404	1-216-845-11	METAL CHIP	100K	5%	1/16W
R405	1-216-845-11	METAL CHIP	100K	5%	1/16W
R406	1-216-845-11	METAL CHIP	100K	5%	1/16W
R407	1-216-845-11	METAL CHIP	100K	5%	1/16W
R409	1-216-845-11	METAL CHIP	100K	5%	1/16W
R410	1-216-829-11	METAL CHIP	4.7K	5%	1/16W
R412	1-216-829-11	METAL CHIP	4.7K	5%	1/16W
R414	1-216-864-11	METAL CHIP	0	5%	1/16W
R415	1-216-821-11	METAL CHIP	1K	5%	1/16W
R416	1-216-821-11	METAL CHIP	1K	5%	1/16W
R417	1-216-821-11	METAL CHIP	1K	5%	1/16W
R418	1-216-821-11	METAL CHIP	1K	5%	1/16W
R419	1-216-839-11	METAL CHIP	33K	5%	1/16W
R420	1-216-833-11	METAL CHIP	10K	5%	1/16W
R421	1-216-833-11	METAL CHIP	10K	5%	1/16W
R424	1-216-841-11	METAL CHIP	47K	5%	1/16W
R425	1-216-853-11	METAL CHIP	470K	5%	1/16W
R426	1-216-825-11	METAL CHIP	2.2K	5%	1/16W
R427	1-216-841-11	METAL CHIP	47K	5%	1/16W
R428	1-216-841-11	METAL CHIP	47K	5%	1/16W
R429	1-216-811-11	METAL CHIP	150	5%	1/16W
R430	1-216-813-11	METAL CHIP	220	5%	1/16W
R431	1-216-825-11	METAL CHIP	2.2K	5%	1/16W
R432	1-216-845-11	METAL CHIP	100K	5%	1/16W
R433	1-216-845-11	METAL CHIP	100K	5%	1/16W
R434	1-216-853-11	METAL CHIP	470K	5%	1/16W
R435	1-216-853-11	METAL CHIP	470K	5%	1/16W
R440	1-216-841-11	METAL CHIP	47K	5%	1/16W
R441	1-216-845-11	METAL CHIP	100K	5%	1/16W
R452	1-217-671-11	METAL CHIP	1	5%	1/10W
R453	1-217-671-11	METAL CHIP	1	5%	1/10W
R454	1-217-671-11	METAL CHIP	1	5%	1/10W
R455	1-216-833-11	METAL CHIP	10K	5%	1/16W
R456	1-216-833-11	METAL CHIP	10K	5%	1/16W
R457	1-216-833-11	METAL CHIP	10K	5%	1/16W
R458	1-216-808-11	METAL CHIP	82	5%	1/16W
R459	1-216-864-11	METAL CHIP	0	5%	1/16W
R460	1-216-864-11	METAL CHIP	0	5%	1/16W
R461	1-216-853-11	METAL CHIP	470K	5%	1/16W
R462	1-216-853-11	METAL CHIP	470K	5%	1/16W
R463	1-216-853-11	METAL CHIP	470K	5%	1/16W
R464	1-216-851-11	METAL CHIP	330K	5%	1/16W
R465	1-216-845-11	METAL CHIP	100K	5%	1/16W
R466	1-216-841-11	METAL CHIP	47K	5%	1/16W
R467	1-216-833-11	METAL CHIP	10K	5%	1/16W

Ref. No.	Part No.	Description			Remark
R468	1-216-833-11	METAL CHIP	10K	5%	1/16W
R469	1-216-841-11	METAL CHIP	47K	5%	1/16W
R470	1-216-829-11	METAL CHIP	4.7K	5%	1/16W
R471	1-216-833-11	METAL CHIP	10K	5%	1/16W
R472	1-216-833-11	METAL CHIP	10K	5%	1/16W
			(EXCEPT TRV15E/TRV15EP/TRV35E)		
R472	1-216-837-11	METAL CHIP	22K	5%	1/16W
			(TRV15E/TRV15EP/TRV35E)		
R473	1-216-841-11	METAL CHIP	47K	5%	1/16W
R474	1-216-817-11	METAL CHIP	470	5%	1/16W
R475	1-216-838-11	METAL CHIP	27K	5%	1/16W
R476	1-216-817-11	METAL CHIP	470	5%	1/16W
R477	1-216-864-11	METAL CHIP	0	5%	1/16W
R479	1-216-864-11	METAL CHIP	0	5%	1/16W
R480	1-216-864-11	METAL CHIP	0	5%	1/16W
R481	1-216-864-11	METAL CHIP	0	5%	1/16W
R482	1-216-830-11	METAL CHIP	5.6K	5%	1/16W
			(TRV15E/TRV15EP/TRV35E)		
R482	1-216-833-11	METAL CHIP	10K	5%	1/16W
			(EXCEPT TRV15E/TRV15EP/TRV35E)		
R483	1-216-836-11	METAL CHIP	18K	5%	1/16W
R484	1-217-671-11	METAL CHIP	1	5%	1/10W
R485	1-217-671-11	METAL CHIP	1	5%	1/10W
R486	1-216-845-11	METAL CHIP	100K	5%	1/16W
R487	1-216-827-11	METAL CHIP	3.3K	5%	1/16W
R488	1-216-829-11	METAL CHIP	4.7K	5%	1/16W
R490	1-216-023-00	METAL CHIP	82	5%	1/10W
R502	1-216-798-11	RES,CHIP	12	5%	1/16W
R503	1-216-798-11	RES,CHIP	12	5%	1/16W
R504	1-216-845-11	METAL CHIP	100K	5%	1/16W
R505	1-216-864-11	METAL CHIP	0	5%	1/16W
R506	1-216-857-11	METAL CHIP	1M	5%	1/16W
R508	1-216-809-11	METAL CHIP	100	5%	1/16W
R509	1-216-864-11	METAL CHIP	0	5%	1/16W
R510	1-216-809-11	METAL CHIP	100	5%	1/16W
R511	1-216-809-11	METAL CHIP	100	5%	1/16W
			(TRV15/TRV15PK/TRV15E/TRV15EP)		
R512	1-216-853-11	METAL CHIP	470K	5%	1/16W
R513	1-216-825-11	METAL CHIP	2.2K	5%	1/16W
R514	1-216-821-11	METAL CHIP	1K	5%	1/16W
R515	1-216-864-11	METAL CHIP	0	5%	1/16W
R522	1-216-864-11	METAL CHIP	0	5%	1/16W
R525	1-216-864-11	METAL CHIP	0	5%	1/16W
R526	1-216-864-11	METAL CHIP	0	5%	1/16W
R527	1-216-864-11	METAL CHIP	0	5%	1/16W
			(EXCEPT TRV15/TRV15PK/TRV15E/TRV15EP)		
R529	1-216-864-11	METAL CHIP	0	5%	1/16W
R551	1-216-841-11	METAL CHIP	47K	5%	1/16W
R554	1-216-843-11	METAL CHIP	68K	5%	1/16W
R555	1-216-829-11	METAL CHIP	4.7K	5%	1/16W
R556	1-216-001-00	METAL CHIP	10	5%	1/10W
R557	1-216-843-11	METAL CHIP	68K	5%	1/16W
R558	1-216-295-91	SHORT	0		
R560	1-216-821-11	METAL CHIP	1K	5%	1/16W
R561	1-216-853-11	METAL CHIP	470K	5%	1/16W
R562	1-216-849-11	METAL CHIP	220K	5%	1/16W
R563	1-216-853-11	METAL CHIP	470K	5%	1/16W
R564	1-216-853-11	METAL CHIP	470K	5%	1/16W
R565	1-216-833-11	METAL CHIP	10K	5%	1/16W

VC-195

Ref. No.	Part No.	Description			Remark
R566	1-216-835-11	METAL CHIP	15K	5%	1/16W
R567	1-216-825-11	METAL CHIP	2.2K	5%	1/16W
R569	1-216-825-11	METAL CHIP	2.2K	5%	1/16W
R570	1-216-841-11	METAL CHIP	47K	5%	1/16W
R571	1-216-837-11	METAL CHIP	22K	5%	1/16W
R572	1-216-845-11	METAL CHIP	100K	5%	1/16W
R573	1-216-815-11	METAL CHIP	330	5%	1/16W
R574	1-216-821-11	METAL CHIP	1K	5%	1/16W
R575	1-216-821-11	METAL CHIP	1K	5%	1/16W
R576	1-216-821-11	METAL CHIP	1K	5%	1/16W
R577	1-216-833-11	METAL CHIP	10K	5%	1/16W
R579	1-216-821-11	METAL CHIP	1K	5%	1/16W
R582	1-216-864-11	METAL CHIP	0	5%	1/16W
R603	1-216-845-11	METAL CHIP	100K	5%	1/16W
R604	1-216-813-11	METAL CHIP	220	5%	1/16W
R605	1-216-841-11	METAL CHIP	47K	5%	1/16W
R606	1-216-829-11	METAL CHIP	4.7K	5%	1/16W
	(TRV35/TRV65/TRV65PK/TRV85/TRV93/TRV615/TRV815)				
R608	1-216-845-11	METAL CHIP	100K	5%	1/16W
R610	1-216-821-11	METAL CHIP	1K	5%	1/16W
R611	1-216-825-11	METAL CHIP	2.2K	5%	1/16W
	(TRV35/TRV65/TRV65PK/TRV85/TRV93/TRV615/TRV815)				
R612	1-216-853-11	METAL CHIP	470K	5%	1/16W
R613	1-216-821-11	METAL CHIP	1K	5%	1/16W
R614	1-216-821-11	METAL CHIP	1K	5%	1/16W
	(TRV35/TRV65/TRV65PK/TRV85/TRV93/TRV615/TRV815)				
R618	1-216-853-11	METAL CHIP	470K	5%	1/16W
R619	1-216-853-11	METAL CHIP	470K	5%	1/16W
R620	1-216-853-11	METAL CHIP	470K	5%	1/16W
R621	1-216-853-11	METAL CHIP	470K	5%	1/16W
R622	1-216-853-11	METAL CHIP	470K	5%	1/16W
R624	1-216-853-11	METAL CHIP	470K	5%	1/16W
R625	1-216-845-11	METAL CHIP	100K	5%	1/16W
R627	1-216-853-11	METAL CHIP	470K	5%	1/16W
R628	1-216-841-11	METAL CHIP	47K	5%	1/16W
R629	1-216-833-11	METAL CHIP	10K	5%	1/16W
R630	1-216-826-11	METAL CHIP	2.7K	5%	1/16W
R631	1-216-845-11	METAL CHIP	100K	5%	1/16W
R632	1-216-857-11	METAL CHIP	1M	5%	1/16W
R633	1-216-853-11	METAL CHIP	470K	5%	1/16W
R634	1-216-853-11	METAL CHIP	470K	5%	1/16W
R635	1-216-857-11	METAL CHIP	1M	5%	1/16W
R636	1-216-857-11	METAL CHIP	1M	5%	1/16W
R637	1-216-845-11	METAL CHIP	100K	5%	1/16W
R638	1-216-845-11	METAL CHIP	100K	5%	1/16W
R639	1-216-845-11	METAL CHIP	100K	5%	1/16W
R642	1-216-821-11	METAL CHIP	1K	5%	1/16W
R643	1-216-857-11	METAL CHIP	1M	5%	1/16W
R644	1-216-841-11	METAL CHIP	47K	5%	1/16W
R645	1-216-845-11	METAL CHIP	100K	5%	1/16W
R646	1-216-853-11	METAL CHIP	470K	5%	1/16W
R647	1-216-853-11	METAL CHIP	470K	5%	1/16W
R648	1-216-853-11	METAL CHIP	470K	5%	1/16W
R649	1-216-857-11	METAL CHIP	1M	5%	1/16W
R650	1-219-570-11	RES,CHIP	10M	5%	1/16W
R651	1-216-845-11	METAL CHIP	100K	5%	1/16W
R652	1-216-853-11	METAL CHIP	470K	5%	1/16W
R653	1-216-853-11	METAL CHIP	470K	5%	1/16W

Ref. No.	Part No.	Description			Remark
R654	1-216-817-11	METAL CHIP	470	5%	1/16W
R655	1-216-853-11	METAL CHIP	470K	5%	1/16W
R662	1-216-841-11	METAL CHIP	47K	5%	1/16W
	(TRV65/TRV65PK/TRV85/TRV93/TRV615/TRV815)				
R663	1-216-853-11	METAL CHIP	470K	5%	1/16W
	(TRV65/TRV65PK/TRV85/TRV93/TRV615/TRV815)				
R665	1-216-853-11	METAL CHIP	470K	5%	1/16W
	(TRV65/TRV65PK/TRV85/TRV93/TRV615/TRV815)				
R666	1-216-821-11	METAL CHIP	1K	5%	1/16W
R667	1-216-821-11	METAL CHIP	1K	5%	1/16W
R668	1-216-821-11	METAL CHIP	1K	5%	1/16W
R669	1-216-821-11	METAL CHIP	1K	5%	1/16W
R670	1-216-821-11	METAL CHIP	1K	5%	1/16W
R671	1-216-821-11	METAL CHIP	1K	5%	1/16W
R672	1-216-821-11	METAL CHIP	1K	5%	1/16W
R673	1-216-821-11	METAL CHIP	1K	5%	1/16W
R675	1-216-821-11	METAL CHIP	1K	5%	1/16W
R676	1-216-821-11	METAL CHIP	1K	5%	1/16W
R677	1-216-821-11	METAL CHIP	1K	5%	1/16W
R678	1-216-821-11	METAL CHIP	1K	5%	1/16W
R679	1-216-821-11	METAL CHIP	1K	5%	1/16W
R680	1-216-845-11	METAL CHIP	100K	5%	1/16W
R681	1-216-821-11	METAL CHIP	1K	5%	1/16W
R682	1-216-821-11	METAL CHIP	1K	5%	1/16W
R683	1-216-821-11	METAL CHIP	1K	5%	1/16W
R684	1-216-821-11	METAL CHIP	1K	5%	1/16W
R685	1-216-821-11	METAL CHIP	1K	5%	1/16W
R686	1-216-821-11	METAL CHIP	1K	5%	1/16W
R687	1-216-821-11	METAL CHIP	1K	5%	1/16W
R689	1-216-864-11	METAL CHIP	0	5%	1/16W
	(EXCEPT TRV65/TRV65PK/TRV85/TRV93/TRV615/TRV815)				
R690	1-216-821-11	METAL CHIP	1K	5%	1/16W
R691	1-216-845-11	METAL CHIP	100K	5%	1/16W
R692	1-216-853-11	METAL CHIP	470K	5%	1/16W
R693	1-216-821-11	METAL CHIP	1K	5%	1/16W
R726	1-216-864-11	METAL CHIP	0	5%	1/16W
R752	1-216-841-11	METAL CHIP	47K	5%	1/16W
	(TRV35/TRV65/TRV65PK/TRV85/TRV93/TRV615/TRV815)				
R753	1-216-841-11	METAL CHIP	47K	5%	1/16W
	(TRV35/TRV65/TRV65PK/TRV85/TRV93/TRV615/TRV815)				
R755	1-216-837-11	METAL CHIP	22K	5%	1/16W
	(TRV35/TRV65/TRV65PK/TRV85/TRV93/TRV615/TRV815)				
R756	1-216-829-11	METAL CHIP	4.7K	5%	1/16W
	(TRV35/TRV65/TRV65PK/TRV85/TRV93/TRV615/TRV815)				
R757	1-216-829-11	METAL CHIP	4.7K	5%	1/16W
	(TRV35/TRV65/TRV65PK/TRV85/TRV93/TRV615/TRV815)				
R758	1-216-833-11	METAL CHIP	10K	5%	1/16W
	(TRV35/TRV65/TRV65PK/TRV85/TRV93/TRV615/TRV815)				
R759	1-216-833-11	METAL CHIP	10K	5%	1/16W
	(TRV35/TRV65/TRV65PK/TRV85/TRV93/TRV615/TRV815)				
R760	1-216-835-11	METAL CHIP	15K	5%	1/16W
	(TRV35/TRV65/TRV65PK/TRV85/TRV93/TRV615/TRV815)				
R761	1-216-857-11	METAL CHIP	1M	5%	1/16W
	(TRV35/TRV65/TRV65PK/TRV85/TRV93/TRV615/TRV815)				
R763	1-218-879-11	RES,CHIP	22K	0.50%	1/16W
	(TRV35/TRV65/TRV65PK/TRV85/TRV93/TRV615/TRV815)				
R764	1-216-815-11	METAL CHIP	330	5%	1/16W
	(TRV35/TRV65/TRV65PK/TRV85/TRV93/TRV615/TRV815)				
R765	1-216-821-11	METAL CHIP	1K	5%	1/16W
	(TRV35/TRV65/TRV65PK/TRV85/TRV93/TRV615/TRV815)				

Ref. No.	Part No.	Description			Remark
R767	1-216-817-11	METAL CHIP	470	5%	1/16W
		(TRV35/TRV65/TRV65PK/TRV85/TRV93/TRV615/TRV815)			
R768	1-216-847-11	METAL CHIP	150K	5%	1/16W
		(TRV35/TRV65/TRV65PK/TRV85/TRV93/TRV615/TRV815)			
R770	1-216-847-11	METAL CHIP	150K	5%	1/16W
		(TRV35/TRV65/TRV65PK/TRV85/TRV93/TRV615/TRV815)			
R771	1-216-818-11	METAL CHIP	560	5%	1/16W
		(TRV35/TRV65/TRV65PK/TRV85/TRV93/TRV615/TRV815)			
R772	1-216-831-11	METAL CHIP	6.8K	5%	1/16W
		(TRV35/TRV65/TRV65PK/TRV85/TRV93/TRV615/TRV815)			
R773	1-216-817-11	METAL CHIP	470	5%	1/16W
		(TRV35/TRV65/TRV65PK/TRV85/TRV93/TRV615/TRV815)			
R774	1-216-840-11	METAL CHIP	39K	5%	1/16W
		(TRV35/TRV65/TRV65PK/TRV85/TRV93/TRV615/TRV815)			
R775	1-216-864-11	METAL CHIP	0	5%	1/16W
		(TRV15E/TRV15EP/TRV35E)			
R917	1-216-837-11	METAL CHIP	22K	5%	1/16W
		(EXCEPT TRV93)			
R917	1-216-841-11	METAL CHIP	47K	5%	1/16W
		(TRV93)			
R918	1-216-845-11	METAL CHIP	100K	5%	1/16W
R919	1-216-837-11	METAL CHIP	22K	5%	1/16W
		(TRV35)			
R919	1-216-841-11	METAL CHIP	47K	5%	1/16W
		(TRV25/TRV25PK/TRV215)			
R919	1-216-842-11	METAL CHIP	56K	5%	1/16W
		(TRV15/TRV15PK)			
R919	1-216-845-11	METAL CHIP	100K	5%	1/16W
		(TRV15E/TRV15EP/TRV35E/TRV65/TRV65PK/TRV85/TRV93/TRV615/TRV815)			
R920	1-216-837-11	METAL CHIP	22K	5%	1/16W
		(TRV15E/TRV15EP)			
R920	1-216-841-11	METAL CHIP	47K	5%	1/16W
		(TRV35E)			
R920	1-216-843-11	METAL CHIP	68K	5%	1/16W
		(TRV15/TRV15PK)			
R920	1-216-845-11	METAL CHIP	100K	5%	1/16W
		(TRV25/TRV25PK/TRV215/TRV35)			
R921	1-216-845-11	METAL CHIP	100K	5%	1/16W
R922	1-217-671-11	METAL CHIP	1	5%	1/10W
R923	1-217-671-11	METAL CHIP	1	5%	1/10W
R924	1-216-821-11	METAL CHIP	1K	5%	1/16W
R925	1-216-821-11	METAL CHIP	1K	5%	1/16W
R926	1-216-864-11	METAL CHIP	0	5%	1/16W
		(TRV65/TRV65PK/TRV85/TRV615/TRV815)			
R927	1-216-864-11	METAL CHIP	0	5%	1/16W
		(TRV93)			
		< VIBRATOR >			
X151	1-767-028-21	VIBRATOR, CRYSTAL (14.318MHz)			
		(TRV65/TRV65PK/TRV85/TRV93/TRV615/TRV815)			
X401	1-760-655-41	VIBRATOR, CRYSTAL (20MHz)			
X501	1-760-320-11	VIBRATOR, CRYSTAL (28.6363MHz)			
		(EXCEPT TRV15E/TRV15EP/TRV35E)			
X501	1-760-321-11	VIBRATOR, CRYSTAL (28.375MHz)			
		(TRV15E/TRV15EP/TRV35E)			
X601	1-579-907-21	VIBRATOR, CERAMIC (20MHz)			
X602	1-760-458-21	VIBRATOR, CRYSTAL (32.798kHz)			

Ref. No.	Part No.	Description			Remark
	A-7066-792-A	VF-99(VHL4) BOARD, COMPLETE			
		**********			
		(EXCEPT TRV15E/TRV15EP/TRV35E/TRV93)			
	A-7056-774-A	ED PWB, VF-99(HP) BOARD, COMPLETE			
		**********			
		(TRV15E/TRV15EP/TRV35E)			
		(Ref.No. 10,000 Series)			
		< CAPACITOR >			
C901	1-107-854-11	TANTAL. CHIP	68uF	20%	6.3V
C902	1-163-038-91	CERAMIC CHIP	0.1uF		25V
C903	1-135-145-11	TANTALUM CHIP	0.47uF	10%	35V
C904	1-162-965-11	CERAMIC CHIP	0.0015uF	10%	50V
C905	1-104-752-11	TANTAL. CHIP	33uF	20%	6.3V
C906	1-162-638-11	CERAMIC CHIP	1uF		16V
C907	1-104-563-11	FILM CHIP	0.1uF	5%	16V
C908	1-162-920-11	CERAMIC CHIP	27PF	5%	50V
C909	1-163-009-11	CERAMIC CHIP	0.001uF	10%	50V
⚠C910	1-164-758-11	CERAMIC CHIP	0.0039uF	5%	50V
⚠C911	1-164-715-11	CERAMIC CHIP	0.0068uF	5%	50V
C912	1-107-854-11	TANTAL. CHIP	68uF	20%	6.3V
C913	1-135-145-11	TANTALUM CHIP	0.47uF	10%	35V
C914	1-107-689-21	TANTAL. CHIP	1uF	20%	35V
		(EXCEPT TRV15E/TRV15EP/TRV35E/TRV93)			
C914	1-113-984-11	TANTAL. CHIP	1.5uF	20%	35V
		(TRV15E/TRV15EP/TRV35E)			
C915	1-163-037-11	CERAMIC CHIP	0.022uF	10%	25V
C916	1-164-611-11	CERAMIC CHIP	0.001uF	10%	500V
		< CONNECTOR >			
CN901	1-573-506-41	CONNECTOR, FPC (NON ZIF) 4P			
CN902	1-580-057-11	PIN, CONNECTOR 4P			
		< DIODE >			
D901	8-719-951-21	DIODE PR1102W-TR			
D903	8-719-404-49	DIODE MA111-TX			
		< IC >			
IC901	8-759-196-14	IC BA7149F-E2			
		< COIL >			
L901	1-412-031-11	INDUCTOR CHIP	47uH		
L902	1-410-387-11	INDUCTOR CHIP	33uH		
⚠L903	1-411-697-11	COIL, FERRITE (HLC)			
		< TRANSISTOR >			
Q901	8-729-230-63	TRANSISTOR	2SD1819A-QRS-TX		
Q902	8-729-106-68	TRANSISTOR	2SD1615-T1GLGK		
Q903	8-729-216-31	TRANSISTOR	2SA1163G-TE85L		
Q904	8-729-230-63	TRANSISTOR	2SD1819A-QRS-TX		
		< RESISTOR >			
R901	1-216-817-11	METAL CHIP	470	5%	1/16W
R902	1-216-817-11	METAL CHIP	470	5%	1/16W
R903	1-216-057-00	METAL CHIP	2.2K	5%	1/10W
R904	1-216-833-11	METAL CHIP	10K	5%	1/16W
R905	1-216-822-11	METAL CHIP	1.2K	5%	1/16W

The components identified by mark ⚠ or dotted line with mark ⚠ are critical for safety. Replace only with part number specified.	Les composants identifiés par une marque ⚠ sont critiques pour la sécurité. Ne les remplacer que par une piéce portant le numéro spécifié.

Ref. No.	Part No.	Description			Remark
R906	1-216-813-11	METAL CHIP	220	5%	1/16W
R907	1-216-845-11	METAL CHIP	100K	5%	1/16W
R908	1-216-852-11	METAL CHIP	390K	5%	1/16W
R909	1-216-833-11	METAL CHIP	10K	5%	1/16W
R910	1-216-835-11	METAL CHIP	15K	5%	1/16W
R911	1-216-160-00	RES,CHIP	27	5%	1/8W
R912	1-216-857-11	METAL CHIP	1M	5%	1/16W
R913	1-216-820-11	METAL CHIP	820	5%	1/16W
R914	1-216-813-11	METAL CHIP	220	5%	1/16W
R915	1-216-793-11	RES,CHIP	4.7	5%	1/16W
R916	1-218-879-11	RES,CHIP	22K	0.50%	1/16W
		(EXCEPT TRV15E/TRV15EP/TRV35E/TRV93)			
R916	1-218-881-11	RES,CHIP	27K	0.50%	1/16W
		(TRV15E/TRV15EP/TRV35E)			
R917	1-218-891-11	RES,CHIP	68K	0.50%	1/16W
		(EXCEPT TRV15E/TRV15EP/TRV35E/TRV93)			
R917	1-218-893-11	RES,CHIP	82K	0.50%	1/16W
		(TRV15E/TRV15EP/TRV35E)			
R918	1-216-829-11	METAL CHIP	4.7K	5%	1/16W
R919	1-216-839-11	METAL CHIP	33K	5%	1/16W
		(EXCEPT TRV15E/TRV15EP/TRV35E/TRV93)			
R919	1-216-843-11	METAL CHIP	68K	5%	1/16W
		(TRV15E/TRV15EP/TRV35E)			
R920	1-216-837-11	METAL CHIP	22K	5%	1/16W
R921	1-216-795-11	RES,CHIP	6.8	5%	1/16W
R922	1-216-847-11	METAL CHIP	150K	5%	1/16W
R923	1-216-857-11	METAL CHIP	1M	5%	1/16W
R924	1-216-862-11	RES,CHIP	2.7M	5%	1/16W
R925	1-216-862-11	RES,CHIP	2.7M	5%	1/16W
R926	1-216-821-11	METAL CHIP	1K	5%	1/16W
R927	1-216-821-11	METAL CHIP	1K	5%	1/16W
R928	1-216-827-11	METAL CHIP	3.3K	5%	1/16W
R929	1-216-818-11	METAL CHIP	560	5%	1/16W
		< VARIABLE RESISTOR >			
RV903	1-238-852-11	RES, ADJ, CERMET 470			
RV904	1-223-566-11	RES, ADJ, METAL GLAZE 1M			
		< TRANSFORMER >			
⚠T901	1-453-124-11	TRANSFORMER ASSY, FLYBACK			
		< THERMISTOR >			
TH901	1-809-350-21	THERMISTOR, NTC (2125)			
		< CRT SOCKET >			
⚠W901	1-540-019-21	SOCKET ASSY, CRT			

	A-7073-437-A	VF-119 BOARD, COMPLETE (TRV93)			
		**********			
		(Ref.No. 10,000 Series)			
		< CAPACITOR >			
C5401	1-135-259-11	TANTAL. CHIP	10uF	20%	6.3V
C5402	1-162-970-11	CERAMIC CHIP	0.01uF	10%	25V
C5403	1-135-179-21	TANTAL. CHIP	2.2uF	20%	16V
C5404	1-164-156-11	CERAMIC CHIP	0.1uF		25V
C5405	1-164-156-11	CERAMIC CHIP	0.1uF		25V

Ref. No.	Part No.	Description			Remark
C5406	1-164-156-11	CERAMIC CHIP	0.1uF		25V
C5407	1-135-181-21	TANTALUM CHIP	4.7uF	20%	6.3V
C5408	1-135-181-21	TANTALUM CHIP	4.7uF	20%	6.3V
C5409	1-135-181-21	TANTALUM CHIP	4.7uF	20%	6.3V
C5410	1-162-970-11	CERAMIC CHIP	0.01uF	10%	25V
C5411	1-135-181-21	TANTALUM CHIP	4.7uF	20%	6.3V
C5413	1-107-686-11	TANTAL. CHIP	4.7uF	20%	16V
C5414	1-162-970-11	CERAMIC CHIP	0.01uF	10%	25V
C5415	1-164-505-11	CERAMIC CHIP	2.2uF		16V
C5416	1-115-566-11	CERAMIC CHIP	4.7uF	10%	10V
C5417	1-162-970-11	CERAMIC CHIP	0.01uF	10%	25V
C5418	1-115-566-11	CERAMIC CHIP	4.7uF	10%	10V
C5419	1-162-967-11	CERAMIC CHIP	0.0033uF	10%	50V
C5420	1-164-357-11	CERAMIC CHIP	1000PF	5%	50V
C5421	1-162-927-11	CERAMIC CHIP	100PF	5%	50V
C5422	1-135-259-11	TANTAL. CHIP	10uF	20%	6.3V
C5423	1-162-970-11	CERAMIC CHIP	0.01uF	10%	25V
C5424	1-165-112-11	CERAMIC CHIP	0.33uF		16V
C5427	1-165-112-11	CERAMIC CHIP	0.33uF		16V
C5429	1-107-682-11	CERAMIC CHIP	1uF	10%	16V
		< CONNECTOR >			
CN5401	1-766-350-21	CONNECTOR, FFC/FPC 20P			
CN5402	1-691-380-21	CONNECTOR, FFC/FPC 16P			
		< DIODE >			
D5401	8-713-102-80	DIODE 1T369-01-T8A			
		< IC >			
IC5401	8-759-498-53	IC CXA8115R-T4			
IC5402	8-759-364-05	IC M62376GP-65AD			
IC5404	8-752-389-81	IC CXD2458R-T4			
		< COIL >			
L5401	1-412-951-11	INDUCTOR	10uH		
L5402	1-412-951-11	INDUCTOR	10uH		
L5403	1-412-959-11	INDUCTOR	47uH		
L5404	1-412-949-21	INDUCTOR	6.8uH		
L5405	1-412-959-11	INDUCTOR	47uH		
		< RESISTOR >			
R5401	1-216-864-11	METAL CHIP	0	5%	1/16W
R5403	1-216-837-11	METAL CHIP	22K	5%	1/16W
R5405	1-216-837-11	METAL CHIP	22K	5%	1/16W
R5408	1-216-837-11	METAL CHIP	22K	5%	1/16W
R5409	1-216-839-11	METAL CHIP	33K	5%	1/16W
R5415	1-216-864-11	METAL CHIP	0	5%	1/16W
R5416	1-216-837-11	METAL CHIP	22K	5%	1/16W
R5417	1-216-837-11	METAL CHIP	22K	5%	1/16W
R5420	1-216-843-11	METAL CHIP	68K	5%	1/16W
R5421	1-216-839-11	METAL CHIP	33K	5%	1/16W
R5422	1-216-840-11	METAL CHIP	39K	5%	1/16W
R5423	1-216-853-11	METAL CHIP	470K	5%	1/16W
R5424	1-216-840-11	METAL CHIP	39K	5%	1/16W
R5425	1-216-843-11	METAL CHIP	68K	5%	1/16W
R5426	1-216-839-11	METAL CHIP	33K	5%	1/16W

The components identified by mark ⚠ or dotted line with mark ⚠ are critical for safety. Replace only with part number specified.	Les composants identifiés par une marque ⚠ sont critiques pour la sécurité. Ne les remplacer que par une piéce portant le numéro spécifié.

Ref. No.	Part No.	Description			Remark
R5429	1-216-837-11	METAL CHIP	22K	5%	1/16W
R5431	1-216-809-11	METAL CHIP	100	5%	1/16W
R5432	1-216-809-11	METAL CHIP	100	5%	1/16W
R5433	1-218-877-11	RES,CHIP	18K	0.50%	1/16W
R5434	1-218-873-11	RES,CHIP	12K	0.50%	1/16W
R5435	1-216-809-11	METAL CHIP	100	5%	1/16W
R5437	1-216-837-11	METAL CHIP	22K	5%	1/16W
R5439	1-216-837-11	METAL CHIP	22K	5%	1/16W
R5440	1-218-905-11	RES,CHIP	270K	0.50%	1/16W
R5441	1-218-877-11	RES,CHIP	18K	0.50%	1/16W
R5444	1-216-835-11	METAL CHIP	15K	5%	1/16W
R5445	1-216-840-11	METAL CHIP	39K	5%	1/16W
R5446	1-216-833-11	METAL CHIP	10K	5%	1/16W
R5447	1-216-833-11	METAL CHIP	10K	5%	1/16W
R5448	1-216-839-11	METAL CHIP	33K	5%	1/16W
R5449	1-216-864-11	METAL CHIP	0	5%	1/16W
R5452	1-216-821-11	METAL CHIP	1K	5%	1/16W
R5458	1-216-864-11	METAL CHIP	0	5%	1/16W
R5460	1-216-864-11	METAL CHIP	0	5%	1/16W
R5468	1-216-864-11	METAL CHIP	0	5%	1/16W
R5469	1-216-864-11	METAL CHIP	0	5%	1/16W
R5470	1-216-864-11	METAL CHIP	0	5%	1/16W
R5471	1-216-837-11	METAL CHIP	22K	5%	1/16W
R5472	1-218-883-11	RES,CHIP	33K	0.50%	1/16W

A-7073-438-A VF-120 BOARD, COMPLETE (TRV93)
****
(Ref.No. 10,000 Series)

< CAPACITOR >

C5302	1-104-916-11	TANTAL. CHIP	6.8uF	20%	20V
C5303	1-164-227-11	CERAMIC CHIP	0.022uF	10%	25V
C5304	1-162-970-11	CERAMIC CHIP	0.01uF	10%	25V
C5305	1-104-851-11	TANTAL. CHIP	10uF	20%	10V
C5306	1-164-676-11	CERAMIC CHIP	2200PF	5%	16V
C5307	1-135-181-21	TANTALUM CHIP	4.7uF	20%	6.3V
C5308	1-164-227-11	CERAMIC CHIP	0.022uF	10%	25V
C5309	1-162-970-11	CERAMIC CHIP	0.01uF	10%	25V
C5310	1-164-217-11	CERAMIC CHIP	150PF	5%	50V
C5311	1-107-826-11	CERAMIC CHIP	0.1uF	10%	16V
C5312	1-109-982-11	CERAMIC CHIP	1uF	10%	10V
C5313	1-165-128-11	CERAMIC CHIP	0.22uF		16V
C5314	1-162-970-11	CERAMIC CHIP	0.01uF	10%	25V

< CONNECTOR >

CN5301	1-691-346-11	CONNECTOR, FFC/FPC (ZIF) 8P
CN5302	1-691-513-11	CONNECTOR, BOARD TO BOARD 12P

< DIODE >

D5301	8-719-043-70	DIODE MA6S121-(TX)
D5302	8-719-056-49	DIODE 1SS370(TE85L)

< IC >

IC5301	8-759-097-75	IC MB3789PFV-G-BND-ER

< COIL >

L5301	1-412-031-11	INDUCTOR CHIP 47uH

< TRANSISTOR >

Q5301	8-729-028-81	TRANSISTOR RN2305-TE85L
Q5304	8-729-403-35	TRANSISTOR UN5113-TX
Q5305	8-729-402-42	TRANSISTOR UN5213-TX

< RESISTOR >

R5301	1-216-809-11	METAL CHIP	100	5%	1/16W
R5304	1-218-901-11	RES,CHIP	180K	0.50%	1/16W
R5305	1-218-887-11	RES,CHIP	47K	0.50%	1/16W
R5306	1-216-843-11	METAL CHIP	68K	5%	1/16W
R5307	1-216-838-11	METAL CHIP	27K	5%	1/16W
R5308	1-216-847-11	METAL CHIP	150K	5%	1/16W
R5309	1-216-841-11	METAL CHIP	47K	5%	1/16W
R5310	1-216-842-11	METAL CHIP	56K	5%	1/16W
R5311	1-216-850-11	METAL CHIP	270K	5%	1/16W
R5312	1-216-843-11	METAL CHIP	68K	5%	1/16W
R5313	1-216-842-11	METAL CHIP	56K	5%	1/16W
R5314	1-216-850-11	METAL CHIP	270K	5%	1/16W
R5315	1-216-833-11	METAL CHIP	10K	5%	1/16W
R5316	1-216-851-11	METAL CHIP	330K	5%	1/16W
R5317	1-216-845-11	METAL CHIP	100K	5%	1/16W
R5318	1-216-822-11	METAL CHIP	1.2K	5%	1/16W
R5321	1-216-837-11	METAL CHIP	22K	5%	1/16W
R5322	1-216-853-11	METAL CHIP	470K	5%	1/16W
R5324	1-216-864-11	METAL CHIP	0	5%	1/16W

A-7073-454-A VL-19 BOARD, COMPLETE (TRV93)
****
(Ref.No. 9,000 Series)

< CAPACITOR >

C151	1-115-566-11	CERAMIC CHIP	4.7uF	10%	10V
C152	1-162-961-11	CERAMIC CHIP	330PF	10%	50V
C153	1-162-964-11	CERAMIC CHIP	0.001uF	10%	50V

< CONNECTOR >

CN151	1-766-619-11	CONNECTOR, FFC/FPC 8P

< COIL >

L151	1-416-344-11	COIL, CHOKE	10uH

< TRANSISTOR >

Q151	8-729-043-94	TRANSISTOR CPH3106-PM-TL
Q152	8-729-230-63	TRANSISTOR 2SD1819A-QRS-TX

< RESISTOR >

R151	1-216-829-11	METAL CHIP	4.7K	5%	1/16W
R152	1-216-813-11	METAL CHIP	220	5%	1/16W
R153	1-216-821-11	METAL CHIP	1K	5%	1/16W
R154	1-216-845-11	METAL CHIP	100K	5%	1/16W

The components identified by mark ⚠ or dotted line with mark ⚠ are critical for safety.
Replace only with part number specified.

Les composants identifiés par une marque ⚠ sont critiques pour la sécurité.
Ne les remplacer que par une piéce portant le numéro spécifié.

Ref. No.	Part No.	Description	Remark
		MISCELLANEOUS	
		**********	
10	1-475-619-11	SWITCH BLOCK, CONTROL (SS-8500)	
14	1-475-617-11	SWITCH BLOCK, CONTROL (FK-8500) (TRV15/TRV15PK/TRV15E/TRV15EP/TRV25/TRV25PK/TRV215)	
14	1-475-617-31	SWITCH BLOCK, CONTROL (FK-8500)(TRV35E)	
14	1-475-617-51	SWITCH BLOCK, CONTROL (FK-8500)(TRV35)	
14	1-475-617-71	SWITCH BLOCK, CONTROL (FK-8500) (TRV65/TRV65PK/TRV615)	
14	1-475-618-41	SWITCH BLOCK, CONTROL(FK-8500) (TRV85/TRV815/TRV93)	
19	1-467-574-21	REMOTE COMMANDER (RMT-708)	
154	1-475-621-11	SWITCH BLOCK, CONTROL (MR-8500)	
164	1-783-240-11	CABLE, FLEXIBLE FLAT (FFC-236)	
204	1-475-620-11	SWITCH BLOCK,CONTROL (MF-8500) (EXCEPT TRV85/TRV815/TRV93)	
214	1-783-240-11	CABLE, FLEXIBLE FLAT (FFC-236)	
258	1-668-963-41	FP-642FLEXBLE BOARD	
259	1-958-332-11	HARNESS (DP-71)(TRV85/TRV815/TRV93)	
308	1-668-963-11	FP-642 FLEXIBLE BOARD	
309	1-958-379-11	HARNESS (DP-70) (EXCEPT TRV85/TRV815/TRV93)	
362	1-668-962-11	FP-638 FLEXIBLE BOARD (TRV93)	
408	1-783-241-11	CABLE,FLEXIBLE FLAT (FFC-235) (EXCEPT TRV93)	
452	1-668-957-11	FP-621 FLEXBLBOARD	
457	1-668-956-11	FP-620 FLEXIBLE BOARD	
458	1-668-960-11	FP-629 FLEXIBLE BOARD	
461	1-668-961-11	FP-632 FLEXIBLE BOARD (TRV93)	
463	1-774-867-31	CONNECTOR,EXTERNAL(HOT SHOE)8P (TRV65/TRV65PK/TRV85/TRV615/TRV815)	
464	1-668-978-11	FP-633 FLEXIBLE BOARD (TRV65/TRV65PK/TRV85/TRV615/TRV815)	
467	1-668-958-11	FP-622 FLEXIBLE BOARD	
508	1-694-384-11	TERMINAL BOARD, BATTERY	
510	1-668-959-11	FP-623 FLEXBLE BOARD	
514	1-758-084-21	FILTER BLOCK, OPTICAL (EXCEPT TRV15/TRV15PK/TRV15E/TRV15EP)	
514	1-758-133-21	FILTER BLOCK, OPTICAL (TRV15/TRV15PK/TRV15E/TRV15EP)	
516	8-848-722-01	DEVICE, LENS LSV-600A(SOC) (TRV35/TRV35E/TRV65/TRV65PK/TRV615/TRV85/TRV815/TRV93)	
516	8-848-724-01	DEVICE, LENS LSV-601A(SOC) (TRV15/TRV15PK/TRV15E/TRV15EP/TRV25/TRV25PK/TRV215)	
551	8-848-722-01	DEVICE, LENS LSV-600A(SOC) (TRV35/TRV35E/TRV65/TRV65PK/TRV615/TRV85/TRV815/TRV93)	
551	8-848-724-01	DEVICE, LENS LSV-601A(SOC) (TRV15/TRV15PK/TRV15E/TRV15EP/TRV25/TRV25PK/TRV215)	
760	1-658-213-11	FP-355 FLEXIBLE BOARD	
762	1-657-786-13	FP-221 FLEXIBLE BOARD	
764	1-658-214-11	FP-356 FLEXIBLE BOARD	
803	1-657-785-11	FP-248 FLEXIBLE BOARD	
817	1-657-784-11	FP-220 FLEXIBLE BOARD	
D001	8-719-988-42	DIODE GL453	
IC401	A-7030-862-A	CCD BLOCK ASSY (TRV15/TRV15PK)	
IC401	A-7030-865-A	CCD BLOCK ASSY (TRV25/TRV25PK/TRV215/TRV35/TRV65/TRV65PK/TRV615/TRV85/TRV815/TRV93)	
IC401	A-7030-871-A	CCD BLOCK ASSY (TRV35E)	
IC401	A-7030-874-A	CCD BLOCK ASSY (TRV15E/TRV15EP)	
J001	1-565-276-31	JACK, ULTRA SMALL 1P (LANC)	
LCD901	1-803-032-21	INDICATOR MODULE, LIQUID CRYST (TRV85/TRV815)	
LCD901	1-803-035-21	INDICATOR MODULE, LIQUID CRYST (TRV35/TRV65/TRV65PK/TRV615/TRV35E)	
LCD901	1-803-037-21	INDICATOR MODULE, LIQUID CRYST (TRV93)	
LCD901	1-803-040-21	INDICATOR MODULE, LIQUID CRYST (TRV15/TRV15PK/TRV15E/TRV15EP/TRV25/TRV25PK/TRV215)	
LCD902	8-753-023-37	LCX024AK	
M901	A-7048-851-A	DRUM ASSY (DGH-0D5A-R)(PAL) (TRV15E/TRV15EP/35E)	
M901	A-7048-842-A	DRUM ASSY (DGH-0E1A-R)(NTSC)(5HEAD) (TRV65/TRV65PK/TRV85/TRV93/TRV615/TRV815)	
M901	A-7048-870-A	DRUM ASSY (DGH-0E3A-R)(NTSC)(3HEAD) (TRV15/TRV15PK/TRV25/TRV25PK/TRV35TRV215)	
M902	8-835-531-32	CAPSTAN ASSY	
M903	X-3945-401-1	MOTOR ASSY, DC (LOADING)	
M905	1-763-047-11	MOTOR, FOCUS STEPPING	
M906	1-763-046-11	MOTOR, ZOOM STEPPING	
MIC901	1-542-312-11	MICROPHONE (L-CH)	
MIC902	1-542-312-11	MICROPHONE (R-CH) (TRV65/TRV65PK/TRV85/TRV93/TRV615/TRV815)	
⚠ ND5351	1-517-414-51	FLUORESCENT TUBE (0.55 INCH)(TRV93)	
⚠ ND801	1-517-753-11	TUBE, FLUORESCENT,COLD CATHODE (TRV93)	
⚠ ND801	1-517-754-11	TUBE, FLUORESCENT,COLD CATHODE (TRV85/TRV815)	
⚠ ND801	1-517-751-11	TUBE, FLUORESCENT,COLD CATHODE (TRV15/TRV15PK/TRV15E/TRV15EP/TRV25/TRV25PK/TRV215)	
⚠ ND801	1-517-752-11	TUBE, FLUORESCENT,COLD CATHODE (TRV35/TRV65/TRV65PK/TRV615/TRV35E)	
⚠ ND802	1-517-759-11	LIGHT, BACK	
S001	1-692-614-11	SWITCH, PUSH (3 KEY) (Hi8 MP, ME/MP, REC PROOF)	
S002	1-572-688-11	SWITCH, PUSH (1 KEY)(C.C. LOCK)	
S003	1-572-688-11	SWITCH, PUSH (1 KEY) (EJECT)	
S901	1-762-436-15	SWITCH, ROTARY (ENCODER)	
SE451	1-803-041-11	SENSOR, ANGULAR VELOCITY (YAW)	
SE452	1-803-041-21	SENSOR, ANGULAR VELOCITY (PITCH)	
SP901	1-504-753-21	SPEAKER (2.8CM)(TRV85/TRV815/TRV93)	
SP901	1-505-291-11	SPEAKER (DIA 2.8CM) (EXCEPT TRV85/TRV815/TRV93)	
⚠ V901	1-452-673-31	CRT ASSY (M01KXX90WB) (EXCEPT TRV93)	
⚠ VL001	1-517-760-11	LIGHT BLOCK, VIDEO (TRV93)	

		ACCESSORIES & PACKING MATERIALS	
		**********	
	1-467-574-21	REMOTE, COMMANDER (RMT-708)	
⚠	1-475-599-11	ADAPTOR, AC (AC-L10)	
⚠	1-569-008-11	ADAPTOR, CONVERSION 2P (TRV15:E,HK/TRV15PK/TRV25PK/TRV35:E,HK/TRV35E:E,HK)	
⚠	1-573-856-11	ADAPTOR, CONVERSION 2P (TRV35;JE/TRV35E;JE)	
	1-574-039-21	CORD, CONNECTION (A/V connecting cable (Monaural), 1.5m) (TRV15/15PK/TRV25/TRV25PK/TRV215/TRV35/TRV15E/TRV35E)	

Be sure to read "Note on the CCD Imager replacement" on page 4–9 when changing the CCD imager.

The components identified by mark ⚠ or dotted line with mark ⚠ are critical for safety.
Replace only with part number specified.

Les composants identifiés par une marque ⚠ sont critiques pour la sécurité.
Ne les remplacer que par une piéce portant le numéro spécifié.

Ref. No.	Part No.	Description	Remark
*⚠	1-575-131-11	CORD, POWER (TRV15:E,HK/TRV15PK/TRV25PK/TRV35:E,HK/TRV15E:AEP,EE,NE,RU/TRV35E:AEP,EE,NE,RU,E)	
	1-575-334-11	CORD, CONNECTION (A/V connecting cable (Stereo), 1.5m) (TRV65/TRV65PK/TRV85/TRV93/TRV615/TRV815)	
⚠	1-696-819-11	CORD, POWER (TRV35E:AUS)	
⚠	1-751-676-11	CORD, POWER (TRV15:US,CND/TRV25/TRV215/TRV65/TRV615/TRV85)	
	1-764-622-11	ADAPTOR, CONVERSION 21 Pin adaptor (VMC-89) (TRV15E/TRV35E:AEP,EE,NE,RU,UK)	
⚠	1-769-608-11	CORD, POWER (TRV15:E,HK/TRV15PK/TRV25PK/TRV35:E,HK/TRV15E:AEP,EE,NE,RU/TRV35E:AEP,EE,NE,RU,E)	
⚠	1-770-019-11	ADAPTOR, CONVERSION PLUG 3P (TRV15:HK/TRV35:HK)	
⚠	1-775-549-21	CORD, POWER (TRV15:US,CND/TRV25/TRV215/TRV65/TRV615/TRV85/TRV815/TRV93)	
⚠	1-782-476-11	CORD, POWER (TRV35E:CN)	
⚠	1-783-374-11	CORD, POWER (TRV15E:UK/TRV35E:UK,HK)	
	3-861-891-11	MANUAL (3), INSTRUCTION (ENGLISH) (TRV85/TRV815/TRV93)	
	3-861-891-21	MANUAL (3), INSTRUCTION (FRENCH)(93:CND)	
	3-861-901-11	MANUAL,INSTRUCTION(ENGLISH) (TRV15:US,CND/TRV25/TRV215/TRV65/TRV615)	
	3-861-901-21	MANUAL, INSTRUCTION (FRENCH) (TRV15:CND/TRV25:CND/TRV215:CND/TRV65:CND/TRV615:CND)	
	3-861-901-31	MANUAL, INSTRUCTION (ENGLISH) (TRV15:E,HK/TRV15PK/TRV25PK/TRV35:E,HK)	
	3-861-901-41	MANUAL,INSTRUCTION (SPANISH,PORTUGUESE) (TRV15:E,HK/TRV15PK/TRV25PK/TRV35:E,HK)	
	3-861-901-51	MANUAL, INSTRUCTION (CHINESE) (TRV15:E/TRV15PK/TRV25PK/TRV35:E)	
	3-861-901-61	MANUAL, INSTRUCTION (KOREAN)(TRV35:JE)	
	3-861-902-11	MANUAL,INSTRUCTION(ENGLISH,RUSSIAN) (TRV15E:EE,NE,RU,UK/TRV35E:EE,NE,RU,UK)	
	3-861-902-21	MANUAL, INSTRUCTION (SPANISH,PORTUGUESE)(TRV35E:AEP)	
	3-861-902-31	MANUAL, INSTRUCTION (GERMAN,ITALIAN) (TRV15E:AEP/TRV35E:AEP)	
	3-861-902-41	MANUAL, INSTRUCTION (FRENCH,DUTCH) (TRV15E:AEP/TRV35E:AEP)	
	3-861-902-51	MANUAL,INSTRUCTION (SWEDISH,POLISH) (TRV15E:EE,NE,RU/TRV35E:EE,NE,RU)	
	3-861-903-11	MANUAL, INSTRUCTION (ENGLISH,RUSSIAN) (TRV35:E,HK,AUS,CN)	
	3-861-903-21	MANUAL, INSTRUCTION (FRENCH,GERMAN) (TRV35E:E,HK,CN)	
	3-861-903-31	MANUAL, INSTRUCTION (ARABIC,PERSIAN) (TRV35E:E,CN)	
	3-861-903-41	MANUAL, INSTRUCTION (CHINESE)(TRV35E:HK)	
	3-861-903-51	MANUAL, INSTRUCTION (CHINESE)(TRV35E:E,CN,JE)	
	3-971-463-01	LABEL, FIRE CAUTION DISCERN (TRV15:US,CND/TRV25/TRV65/TRV85/TRV93:US)	
	3-987-015-01	BELT (VW), STRAP	
*	3-988-397-11	INDIVIDUAL CARTON (TRV15:US,CND)	
*	3-988-397-21	INDIVIDUAL CARTON (TRV25)	
*	3-988-397-31	INDIVIDUAL CARTON (TRV215:US)	
*	3-988-654-01	INDIVID UAL CARTON (TRV65)	
*	3-988-654-21	INDIVIDUAL CARTON (TRV615)	
*	3-988-654-81	INDIVIDUAL CARTON (TRV15:E,HK)	
*	3-988-654-91	INDIVIDUAL CARTON (TRV35)	
*	3-988-656-01	INDIVIDUAL CARTON (TRV85)	
*	3-988-960-01	BAG, CARRY (TRV15EP/TRV15PK//TRV25PK/TRV65PK)	
	A-7092-699-A	CASE (L) ASSY, BATTERY (TRV93:CND)	
	A-7092-936-A	CASE (L) ASSY (U), BATTERY (TRV15:US,CND/TRV25/TRV65/TRV85/TRV93:US)	
**	NP-F330	BATTERY PACK	

Note.
** MARKPARTSIS AVAILABLE AS AN OPTIONAL ACCESSORY.

The components identified by mark ⚠ or dotted line with mark ⚠ are critical for safety. Replace only with part number specified.	Les composants identifiés par une marque ⚠ sont critiques pour la sécurité. Ne les remplacer que par une piéce portant le numéro spécifié.

< PARTS REFERENCE SHEET >

You can find the parts position of mount locations applying to boards of a set.

Take a copy CAMERA COLOR REPRODUCTION FRAME and Parts reference sheets with a clear sheet for use.

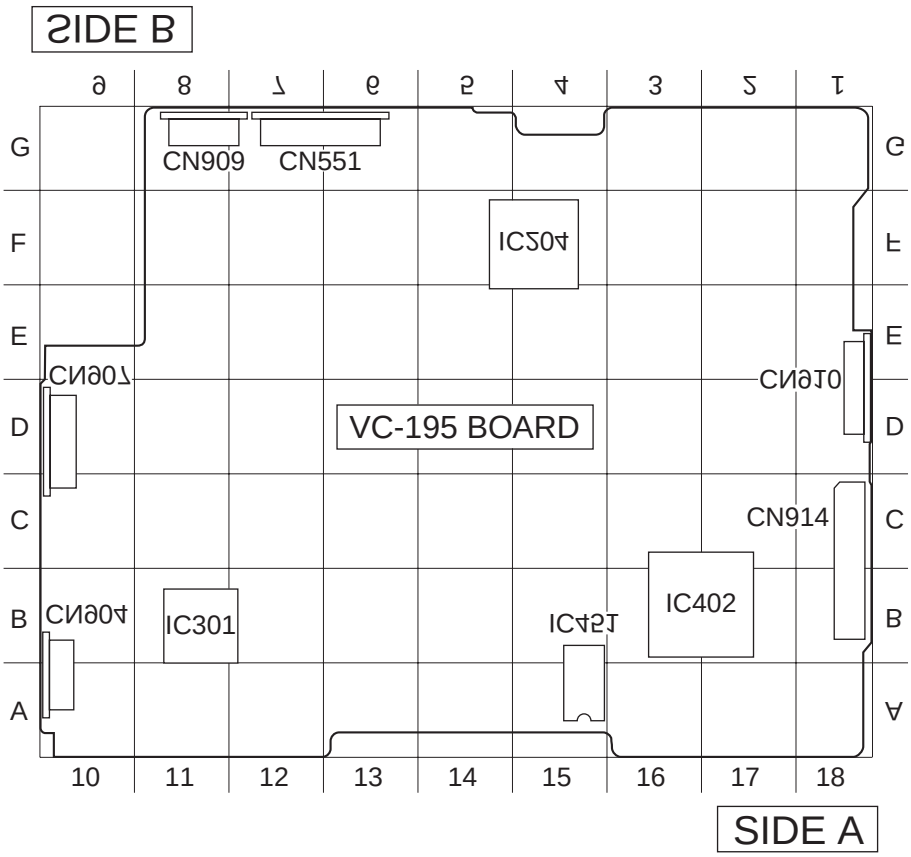

CCD- TRV15/TRV15E/TRV15EP/TRV15PK/TRV25/TRV25PK/TRV35/TRV35E/TRV65/ TRV65PK/TRV85/TRV93/TRV215/TRV615/TRV815

FOR CAMERA COLOR REPRODUCTION ADJUSTMENT

Take a copy CAMERA COLOR REPRODUCTION FRAME and Parts reference sheets with a clear sheet for use.

For NTSC 510H model

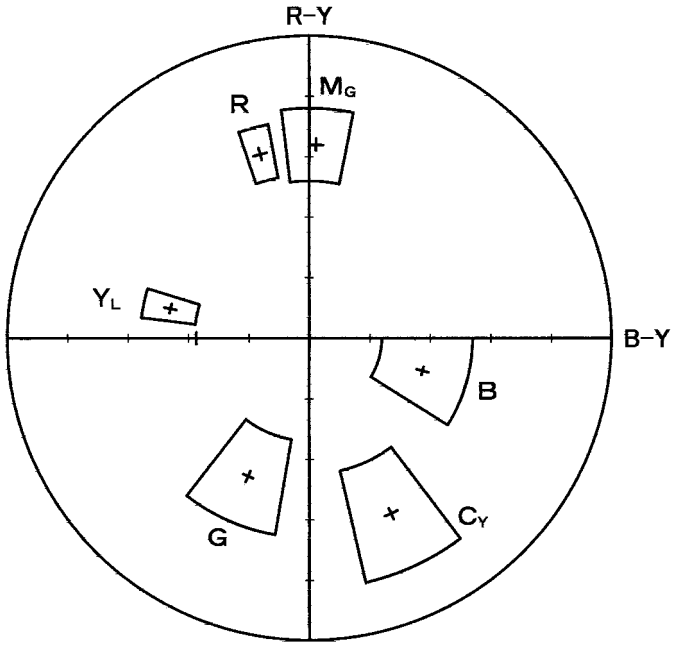

CCD-TRV15/TRV15PK

For PAL 510H, 760H model

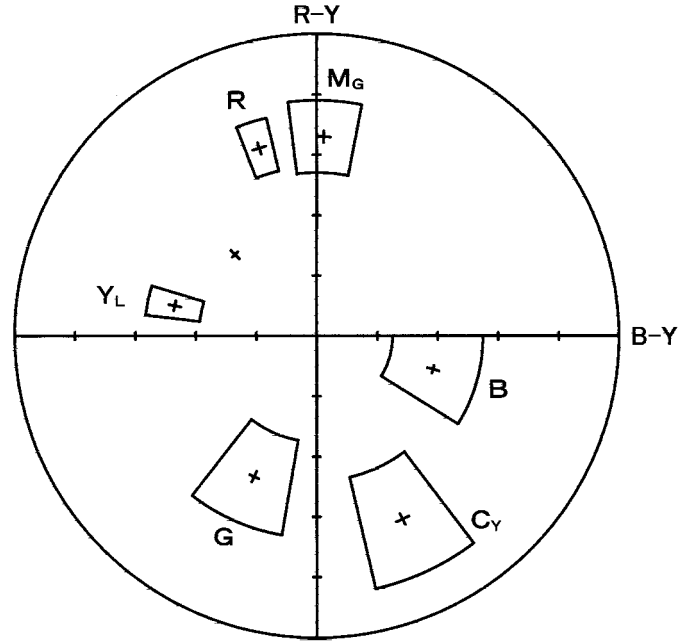

CCD-TRV15E/TRV15EP/TRV35E

For NTSC 760H model

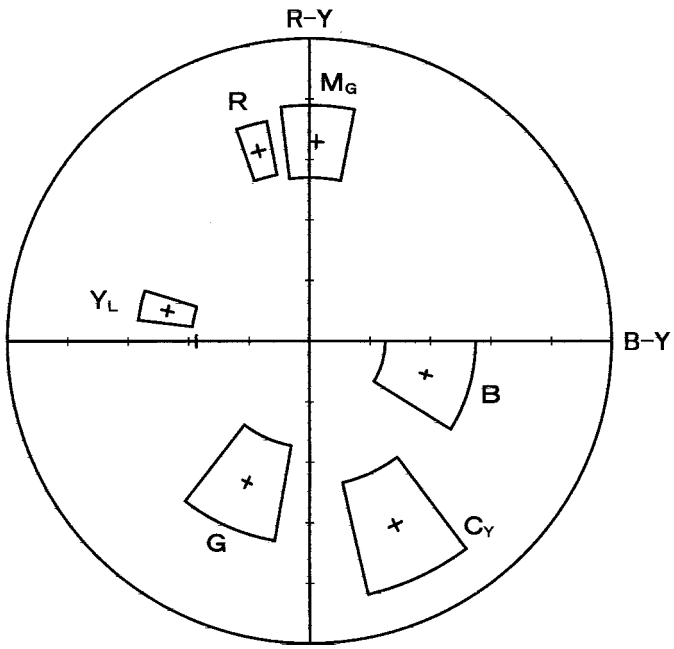

CCD-TRV25/TRV25PK/TRV35/TRV65/TRV65PK/
TRV85/TRV93/TRV215/TRV615/TRV815

9-974-034-11

Sony Corporation
Personal A&V Products Company

98A0990-1
Printed in Japan © 1998. 1
**Published by Quality Engineering Dept.
(Osaki East)**